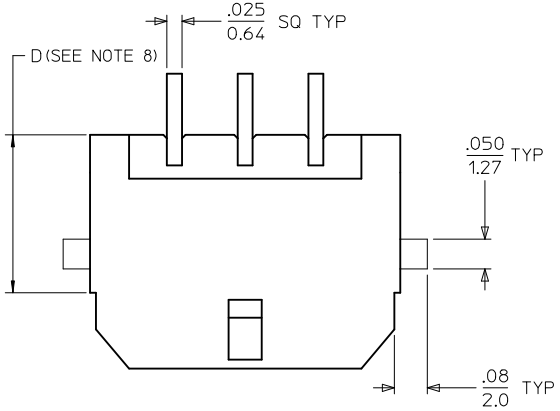

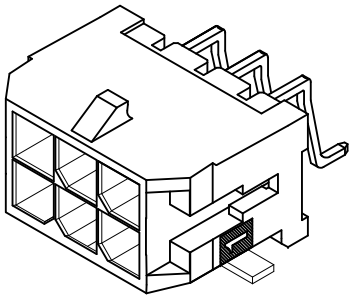

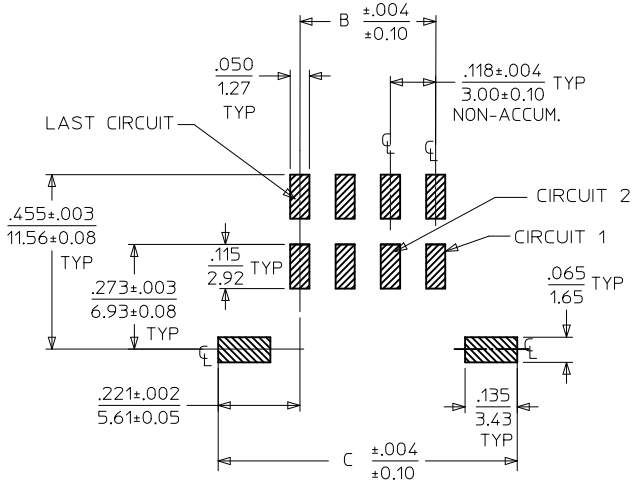

PCB LAYOUT: COMPONENT SIDE

CKTS	A	B	C
04	.380 9.65	.118 3.00	.559 14.20
06	.498 12.65	.236 6.00	.677 17.20
08	.616 15.65	.354 9.00	.795 20.20
10	.734 18.65	.472 12.00	.913 23.20
12	.852 21.65	.591 15.00	1.031 26.20
14	.970 24.65	.709 18.00	1.150 29.20
16	1.088 27.65	.827 21.00	1.268 32.20
18	1.206 30.65	.945 24.00	1.386 35.20
20	1.325 33.65	1.063 27.00	1.504 38.20
22	1.443 36.65	1.181 30.00	1.622 41.20
24	1.561 39.65	1.299 33.00	1.740 44.20

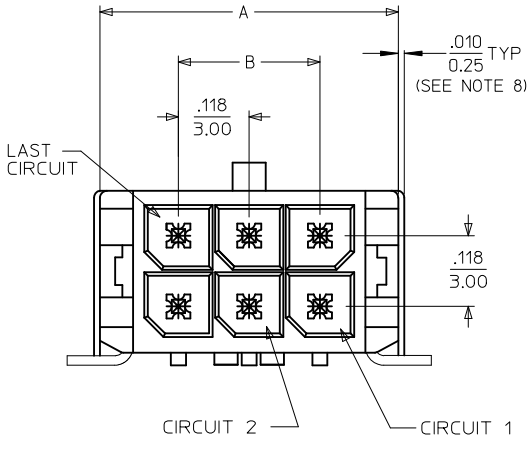

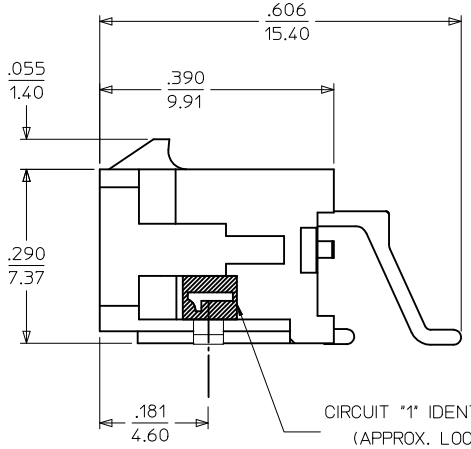

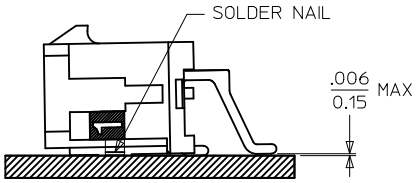

COPLANARITY DETAIL

(SEE NOTE #6)

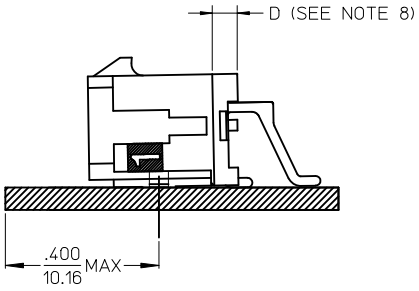

LOCATION DETAIL

(SEE NOTE #9)

NOTES:

1. HOUSING MATERIAL: GLASS FILLED LIQUID CRYSTAL POLYMER, UL94V-0, COLOR: BLACK
   TERMINAL MATERIAL: BRASS ALLOY
2. FINISH: A = .000100/(0.00254) MIN. TIN OVER
   .000050/(0.00127) MIN. NICKEL PLATE.
   B = .000015/(0.00038) MIN. SELECT GOLD IN CONTACT AREA;
   .000100/(0.00254) MIN. SELECT MATTE TIN ON SOLDER TAILS;
   BOTH OVER .000050/(0.00127) MIN. NICKEL PLATE.
   C = .000030/(0.00076) MIN. SELECT GOLD IN CONTACT AREA;
   .000100/(0.00254) MIN. SELECT MATTE TIN ON SOLDER TAILS;
   BOTH OVER .000050/(0.00127) MIN. NICKEL PLATE.
3. PRODUCT SPECIFICATION: PS-43045
4. TAPE AND REEL PACK: SEE MOLEX DRAWING PK-70873-05**
5. MATES WITH MOLEX RECEPTACLE SERIES 43025
6. THE COPLANARITY DIMENSION IS ESTABLISHED BY PLACING THE ASSEMBLY ON A FLAT SURFACE. THE DISTANCE FROM THAT SURFACE TO THE BOTTOM OF ANY TERMINAL OR NAIL MUST NOT EXCEED .006/0.15
7. THE PRIMARY SHIPPING CARTON WILL BE LABELED, "COMPLIANT TO RoHS DIRECTIVE 2002/95/EC AND ELV ANNEX II OF DIRECTIVE 2000/53/EC." ASSEMBLIES WILL BE COMPLIANT TO THE RoHS AND ELV (LEAD-FREE) DIRECTIVES.
8. CIRCUIT SIZES 2-6: "D" IS .265/6.74 FOR .010/0.25 STEP
   CIRCUIT SIZES 8-24: "D" IS .063/1.60 FOR .010/0.25 STEP.
9. TO AVOID INTERFERENCE BETWEEN RECEPTACLE AND PCB, HEADER MUST BE PLACED WITHIN .400/(10.16) MAX. FROM EDGE OF PCB, AS SHOWN IN LOCATION DETAIL.
10. THIS PART CONFORMS TO CLASS B REQUIREMENTS OF COSMETIC SPECIFICATION PS-45499-002.

	FINISH A	
CKTS	MATERIAL NO:	
04	43045-5409	
06	43045-5609	
08	43045-5809	
10	43045-6009	
12	43045-6209	
14	43045-6409	

	FINISH B	
CKTS	MATERIAL NO:	
04	43045-5410	

	FINISH C	
CKTS	MATERIAL NO:	
06	43045-5611	
10	43045-6011	
12	43045-6211	
16	43045-6611	
18	43045-6811	
20	43045-7011	
22	43045-7211	
24	43045-7411	

REV	DESCRIPTION
C	ADD "D" DIM EC NO: UCP2011-0508 DRWN:GMARANANI 2010/08/26 CHKD:SSOUSEK 2010/08/26 APPR:FSMITH 2010/12/23

QUALITY SYMBOLS
FA =0
FB =0
FC =0

GENERAL TOLERANCES (UNLESS SPECIFIED)

	mm	INCH
4 PLACES	± ---	± ---
3 PLACES	± ---	± .010
2 PLACES	± 0.25	± .014
1 PLACE	± 0.36	± ---
ANGULAR ±1/2°		

DRAFT WHERE APPLICABLE MUST REMAIN WITHIN DIMENSIONS

DIMENSION STYLE: IN/MM
SCALE: ---
DESIGN UNITS: METRIC
THIRD ANGLE PROJECTION

DRAWN BY: RHOLTS	DATE: 2004/07/15	TITLE: MICRO FIT (3.0) DUAL ROW RIGHT ANGLE SMT HEADER W/NAILS ASSY, LEAD-FREE
CHECKED BY: LSCHMIDT	DATE: 2004/07/15	
APPROVED BY: FSMITH	DATE: 2004/07/15	molex MOLEX INCORPORATED
MATERIAL NO.: SEE CHART		DOCUMENT NO.: SD-43045-019
SIZE: C		SHEET NO.: 1 OF 1

THIS DRAWING CONTAINS INFORMATION THAT IS PROPRIETARY TO MOLEX INCORPORATED AND SHOULD NOT BE USED WITHOUT WRITTEN PERMISSION

Mouser Electronics

Authorized Distributor

Click to View Pricing, Inventory, Delivery & Lifecycle Information:

Molex:
43045-7011