THIS DRAWING IS UNPUBLISHED. RELEASED FOR PUBLICATION 2006
© COPYRIGHT 2006 BY - ALL RIGHTS RESERVED.

LOC	DIST
A1	-

REVISIONS

P	LTR	DESCRIPTION	DATE	DWN	APVD
	A7	ECR-14-012792	30AUG2014	RK	MKO

PN 1-1,2-1,3-1,4-1,5-1
1-9,2-9,3-9,4-9 & 5-9.

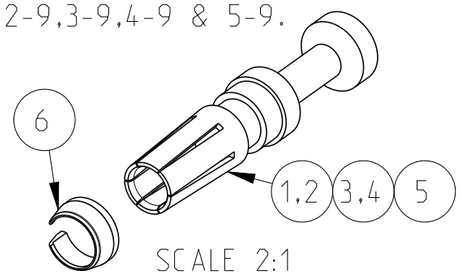

SCALE 2:1

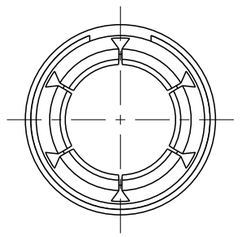

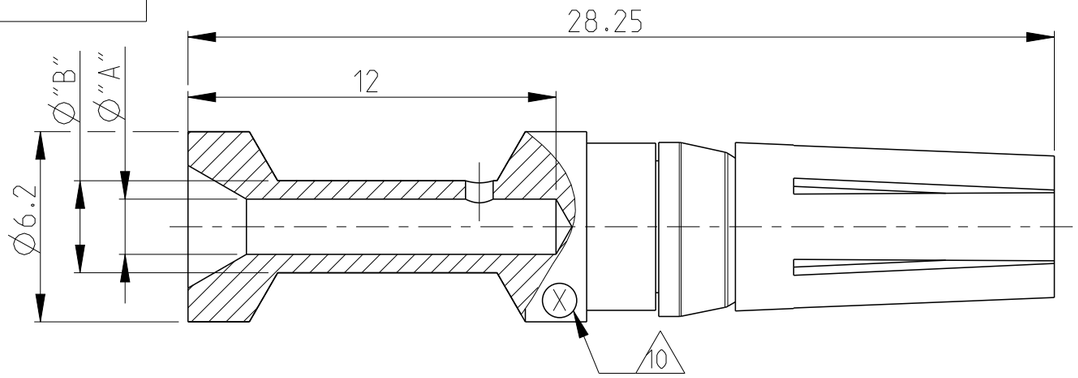

Notes

1. MATERIAL: BRASS
2. FINISH SILVER PLATING: 2 µm Ag MIN. OVER Cu
3. ASSEMBLY WEIGHT SEE TABLE, VOLUME: 479mm³ (APPROX.)
4. PACKAGING: 25 PIECES IN A POLY-BAG AND CARTON
5. SUITABLE SOCKET CONTACT: PN 1108756
6. SUITABLE INSERTS: SERIES HSK
7. SUITABLE CRIMPING TOOL: PN 1-1105850-8
8. SUITABLE INSERTION TOOL: PN 0-1102855-6
9. SUITABLE EXTRACTION TOOL: PN 0-1102855-8
10. CROSS-SECTION MARKING
11. STANDARDS: DIN EN 61984, DIN EN 60664-1

5-9	4-9	3-9	2-9	1-9	5-1	4-1	3-1	2-1	1-1	PLATING	DESCRIPTION	CROSS SECTION [MM²]	WEIGHT IN (Kg) 3	DIMENSIONS "A"	DIMENSIONS "B"	CROSS-SECTION MARKINGS 10	STRIPPING-LENGTH (MM)	ITEM NO
1	1	1	1	1	1	1	1	1	1	Ni	CLIP	-		-	-	-		6
1					1					Ag 2	SOCKET CONTACT	10	0.0030	4.35	5.9	8	12	5
	1					1					SOCKET CONTACT	6.0	0.0029	3.5	4.9	7	12	4
		1					1				SOCKET CONTACT	4.0	0.0027	2.85	3.9	6	12	3
			1					1			SOCKET CONTACT	2.5	0.0028	2.2	3.2	5	12	2
				1					1		SOCKET CONTACT	1.5	0.0028	1.8	3.0	4	12	1
HS.K-C-Bu.Ag 10mm² 4	HS.K-C-Bu.Ag 6mm² 4	HS.K-C-Bu.Ag 4mm² 4	HS.K-C-Bu.Ag 2.5mm² 4	HS.K-C-Bu.Ag 1.5mm² 4	HS.K-C-Bu.Ag 10mm² 4	HS.K-C-Bu.Ag 6mm² 4	HS.K-C-Bu.Ag 4mm² 4	HS.K-C-Bu.Ag 2.5mm² 4	HS.K-C-Bu.Ag 1.5mm² 4									

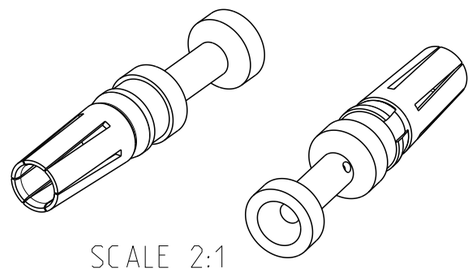

SCALE 2:1

THIS DRAWING IS A CONTROLLED DOCUMENT.

DIMENSIONS: mm

TOLERANCES UNLESS OTHERWISE SPECIFIED:
n. ISO 80
n. ISO 2768-mh-E
n. DIN 16901
0 PLC ±-
1 PLC ±-
2 PLC ±-
3 PLC ±-
4 PLC ±-
ANGLES ±-

MATERIAL 1

FINISH 2

DWN	SCHWEIGER	03Mar2008
CHK	H.BRAUN	03Mar2008
APVD	T. SCHNURPFEIL	03Mar2008
PRODUCT SPEC	108-74004	
APPLICATION SPEC	114-74003	
WEIGHT	-	

TE Connectivity

NAME SOCKET CONTACT SERIES HSK -

SIZE	CAGE CODE	DRAWING NO	RESTRICTED TO
A3	00779	C-1108756	-

Customer Drawing | SCALE 5:1 | SHEET 1 OF 1 | REV A7

1470-19 (3/11)