THIS DRAWING IS UNPUBLISHED. RELEASED FOR PUBLICATION -,- .
© COPYRIGHT - By - ALL RIGHTS RESERVED.

REVISIONS					
P	LTR	DESCRIPTION	DATE	DWN	APVD
	W	REVISED PER ECO-15-015185	09NOV2016	SY	SY

1. GOLD PLATE .00076 [.000030] MIN. THICK.
2. NICKEL PL. .00127 [.000050] MIN. THK. PER QQ-N-290
3. SOLDER PL .00254 [.000100] MIN. THK.
4. STAMPED P/N & DATE CODE.
5. OPTIONAL: KEYING PLUG FOR INTERCONTACT KEYING IS 118982-1
6. OPTIONAL: CARD GUIDE (BASE NO 117169)
7. ALL PARTS ASSEMBLED IN MEXICO MUST BE STAMPED"ASSY IN MEXICO" THE WORD "MEXICO" CAN BE SUBSTITUTEDONLY WHERE PART SIZE PROHIBITS STAMPING "ASSY IN MEXICO", INK PER 115-9009, APPROX. WHERE SHOWN. SIDE OPTIONAL.
8. ACTION PIN REQUIRES 2.13[.084] MIN. THK. PC BOARD.

REQUIRED HOLE DIAMETER TOLERANCES FOR COMPLIANT SECTION

REQ'D DRILL SIZE	HOLE DIA ±.03[.001]	PLATING THICKNESS		HOLE DIAMETER		COPPER HARDNESS (KNOOP)	PAD DIA MIN
		COPPER	TIN/LEAD	AFTER PLATING	AFTER REFLOW		
1.15mm	1.15 [.0453]	0.03-0.08 [.001-.003]	0.008 MIN [.0003] MIN	0.94-1.09 [.037-.043]	0.914-1.09 [.0036-.043]	150 MAX	1.57 [.062]
1.15mm	1.15 [.0453]	NOT PLATED THRU					1.65 [.065]

9. MATTE TIN PL .00254 [.000100] MIN. THK.
10. OBSOLETE PARTS: OBSOLETE CIS STREAMLINING PER D.RENAUD/D.SINISI

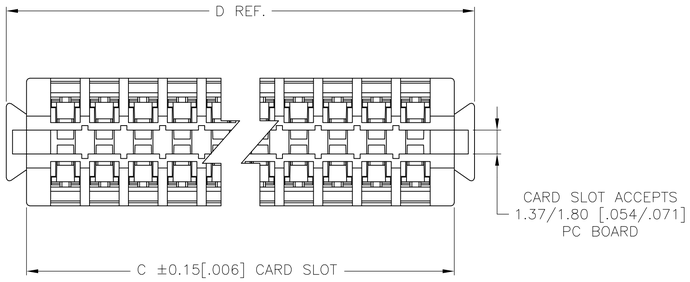

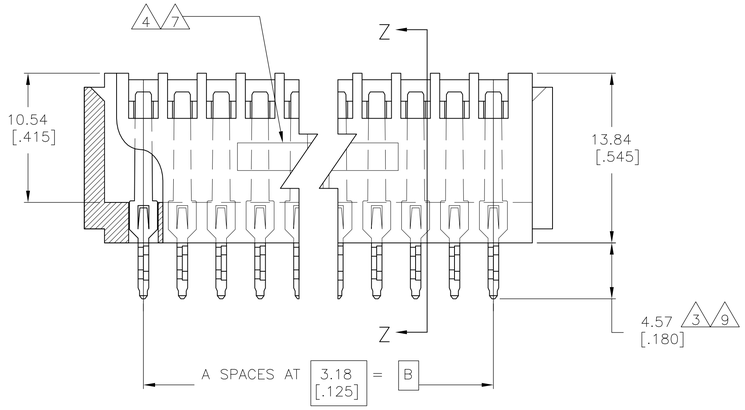

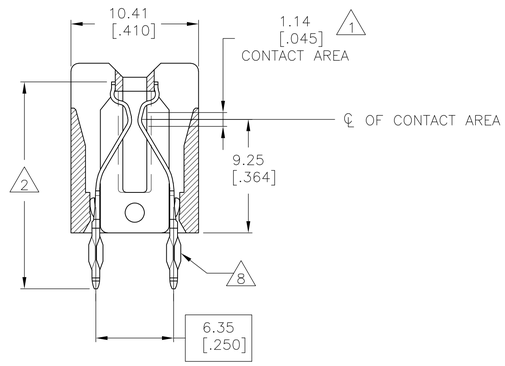

SECTION Z-Z

OBSOLETE 10	9 ~~196.98 [7.755]~~	~~193.68 [7.625]~~	~~187.33 [7.375]~~	~~59~~	~~60~~	9-119822-6
	9 ~~165.23 [6.505]~~	~~161.93 [6.375]~~	~~155.58 [6.125]~~	~~49~~	~~50~~	8-119822-6
	9 ~~133.48 [5.255]~~	~~130.18 [5.125]~~	~~123.83 [4.875]~~	~~39~~	~~40~~	7-119822-6
	9 ~~127.13[5.005]~~	~~123.83[4.875]~~	~~117.48[4.625]~~	~~37~~	~~38~~	7-119822-4
	9 ~~120.78 [4.755]~~	~~117.48 [4.625]~~	~~111.13 [4.375]~~	~~35~~	~~36~~	7-119822-2
	9 ~~101.73 [4.005]~~	~~98.43 [3.875]~~	~~92.09 [3.625]~~	~~29~~	~~30~~	6-119822-6
	9 ~~95.38 [3.755]~~	~~92.08 [3.625]~~	~~85.73 [3.375]~~	~~27~~	~~28~~	6-119822-4
	9 ~~85.85 [3.380]~~	~~82.55 [3.250]~~	~~76.20 [3.000]~~	~~24~~	~~25~~	6-119822-1
	9 ~~76.33 [3.005]~~	~~73.03 [2.875]~~	~~66.68 [2.625]~~	~~21~~	~~22~~	5-119822-8
	9 ~~63.63 [2.505]~~	~~60.33 [2.375]~~	~~53.98 [2.125]~~	~~17~~	~~18~~	5-119822-4
OBSOLETE	~~196.98 [7.755]~~	~~193.68 [7.625]~~	~~187.33 [7.375]~~	~~59~~	~~60~~	~~4-119822-6~~
	–	–	–	–	–	4-119822-5
	–	–	–	–	–	4-119822-4
	–	–	–	–	–	4-119822-3
OBSOLETE	~~184.27 [7.255]~~	~~180.97 [7.125]~~	~~174.62 [6.875]~~	~~55~~	~~56~~	4-119822-2
	–	–	–	–	–	4-119822-1
	–	–	–	–	–	4-119822-0
	–	–	–	–	–	3-119822-9
	–	–	–	–	–	3-119822-8
	–	–	–	–	–	3-119822-7
10 OBSOLETE	~~165.23 [6.505]~~	~~161.93 [6.375]~~	~~155.58 [6.125]~~	~~49~~	~~50~~	3-119822-6
	–	–	–	–	–	3-119822-5
OBSOLETE	~~158.88 [6.255]~~	~~155.58 [6.125]~~	~~149.23 [5.875]~~	~~47~~	~~48~~	3-119822-4
	–	–	–	–	–	3-119822-3
	–	–	–	–	–	3-119822-2
	–	–	–	–	–	3-119822-1
OBSOLETE	~~146.18 [5.755]~~	~~142.88 [5.625]~~	~~136.53 [5.375]~~	~~43~~	~~44~~	3-119822-0
OBSOLETE	~~143.00 [5.630]~~	~~139.70 [5.500]~~	~~133.35 [5.250]~~	~~42~~	~~43~~	2-119822-9
	–	–	–	–	–	2-119822-8
	–	–	–	–	–	2-119822-7
10 OBSOLETE	~~133.48 [5.255]~~	~~130.18 [5.125]~~	~~123.83 [4.875]~~	~~39~~	~~40~~	2-119822-6
	–	–	–	–	–	2-119822-5
10 OBSOLETE	~~127.13[5.005]~~	~~123.83[4.875]~~	~~117.48[4.625]~~	~~37~~	~~38~~	2-119822-4
	–	–	–	–	–	2-119822-3
10 OBSOLETE	~~120.78 [4.755]~~	~~117.48 [4.625]~~	~~111.13 [4.375]~~	~~35~~	~~36~~	2-119822-2
OBSOLETE	~~117.60 [4.630]~~	~~114.30 [4.500]~~	~~107.95 [4.250]~~	~~34~~	~~35~~	2-119822-1
	–	–	–	–	–	2-119822-0
	–	–	–	–	–	1-119822-9
OBSOLETE	~~108.08 [4.255]~~	~~104.78 [4.125]~~	~~98.43 [3.875]~~	~~31~~	~~32~~	1-119822-8
OBSOLETE	~~104.90 [4.130]~~	~~101.60 [4.000]~~	~~95.25 [3.750]~~	~~30~~	~~31~~	1-119822-7
10 OBSOLETE	~~101.73 [4.005]~~	~~98.43 [3.875]~~	~~92.09 [3.625]~~	~~29~~	~~30~~	1-119822-6
	–	–	–	–	–	1-119822-5
10 OBSOLETE	~~95.38 [3.755]~~	~~92.08 [3.625]~~	~~85.73 [3.375]~~	~~27~~	~~28~~	1-119822-4
	–	–	–	–	–	1-119822-3
	–	–	–	–	–	1-119822-2
10 OBSOLETE	~~85.85 [3.380]~~	~~82.55 [3.250]~~	~~76.20 [3.000]~~	~~24~~	~~25~~	1-119822-1
	–	–	–	–	–	1-119822-0
	–	–	–	–	–	119822-9
10 OBSOLETE	~~76.33 [3.005]~~	~~73.03 [2.875]~~	~~66.68 [2.625]~~	~~21~~	~~22~~	119822-8
	–	–	–	–	–	119822-7
OBSOLETE	~~69.98 [2.755]~~	~~66.68 [2.625]~~	~~60.33 [2.375]~~	~~19~~	~~20~~	119822-6
	–	–	–	–	–	119822-5
10 OBSOLETE	~~63.63 [2.505]~~	~~60.33 [2.375]~~	~~53.98 [2.125]~~	~~17~~	~~18~~	119822-4
	–	–	–	–	–	119822-3
	–	–	–	–	–	119822-2
OBSOLETE	~~54.10 [2.130]~~	~~50.80 [2.000]~~	~~44.50 [1.750]~~	~~14~~	~~15~~	119822-1
	D	C	B	A	POSN	PART NO.

THIS DRAWING IS A CONTROLLED DOCUMENT.

DIMENSIONS: mm [INCHES]

TOLERANCES UNLESS OTHERWISE SPECIFIED:
0 PLC ± –
1 PLC ± –
2 PLC ± –
3 PLC ± 0.25[.010]
4 PLC ± –
ANGLES ± –

MATERIAL: HOUSING: VALOX, 420 SEQ,BLACK; CONTACTS: PHOSPHOR BRONZE

FINISH: 1 2 3 9

DWN R. L. LEHR 10-FEB-93
CHK H. ROSE 7/8/94
APVD H. ROSE 7/8/94
PRODUCT SPEC —
APPLICATION SPEC —
WEIGHT 0.000000

TE Connectivity

NAME: CONNECTOR, AMP PACE .125 X .125 – –

SIZE A1 | CAGE CODE 00779 | DRAWING NO C-119822 | RESTRICTED TO —

CUSTOMER DRAWING | SCALE 4:1 | SHEET 1 OF 1 | REV W

4805 (1/15)