TPS76615, TPS76618, TPS76625
TPS76627, TPS76628, TPS76630
TPS76633, TPS76650, TPS76601
SLVS237C–AUGUST 1999–REVISED JANUARY 2009

ULTRALOW QUIESCENT CURRENT 250-mA LOW DROPOUT VOLTAGE REGULATORS

FEATURES

- **250-mA Low Dropout Voltage Regulator**
- **Available in 1.5 V, 1.8 V, 2.5 V, 2.7 V, 2.8 V, 3.0 V, 3.3 V, 5.0 V Fixed Output and Adjustable Versions**
- **Dropout Voltage to 140 mV (Typ) at 250 mA (TPS76650)**
- **Ultralow 35-μA Typical Quiescent Current**
- **3% Tolerance Over Specified Conditions for Fixed Output Versions**
- **Open-Drain Power Good**
- **8-Pin SOIC Package**
- **Thermal Shutdown Protection**

DESCRIPTION

This device is designed to have an ultralow quiescent current and be stable with a 4.7-μF capacitor. This combination provides high performance at a reasonable cost.

Because the PMOS device behaves as a low-value resistor, the dropout voltage is very low (typically 230 mV at an output current of 250 mA for the TPS76650) and is directly proportional to the output current. Additionally, since the PMOS pass element is a voltage-driven device, the quiescent current is very low and independent of output loading (typically 35 μA over the full range of output current, 0 mA to 250 mA). These two key specifications yield a significant improvement in operating life for battery-powered systems. This LDO family also features a sleep mode; applying a TTL high signal to $\overline{EN}$ (enable) shuts down the regulator, reducing the quiescent current to less than 1 μA (typ).

Power good (PG) is an active high output that can be used to implement a power-on reset or a low-battery indicator.

The TPS766xx is offered in 1.5 V, 1.8 V, 2.5 V, 2.7 V, 2.8 V, 3.0 V, 3.3 V and 5.0 V fixed voltage versions and in an adjustable version (programmable over the range of 1.25 V to 5.5 V). Output voltage tolerance is specified as a maximum of 3% over line, load, and temperature ranges. The TPS766xx family is available in an 8-pin SOIC package.

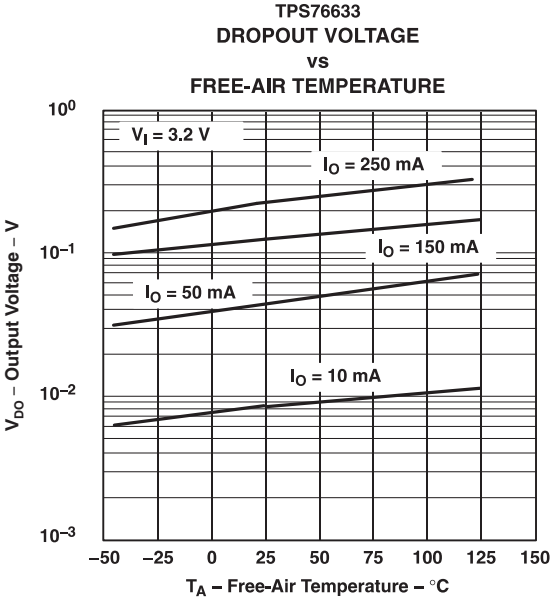

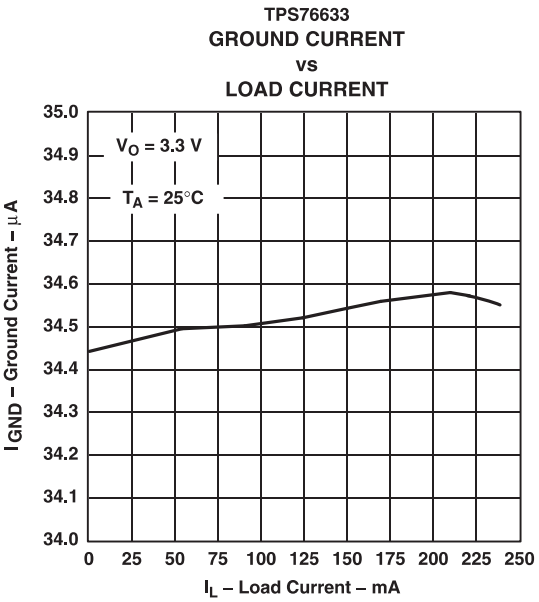

Please be aware that an important notice concerning availability, standard warranty, and use in critical applications of Texas Instruments semiconductor products and disclaimers thereto appears at the end of this data sheet.

All trademarks are the property of their respective owners.

PRODUCTION DATA information is current as of publication date. Products conform to specifications per the terms of the Texas Instruments standard warranty. Production processing does not necessarily include testing of all parameters.

Copyright © 1999–2009, Texas Instruments Incorporated

This integrated circuit can be damaged by ESD. Texas Instruments recommends that all integrated circuits be handled with appropriate precautions. Failure to observe proper handling and installation procedures can cause damage.

ESD damage can range from subtle performance degradation to complete device failure. Precision integrated circuits may be more susceptible to damage because very small parametric changes could cause the device not to meet its published specifications.

ORDERING INFORMATION(1)

PRODUCT	V_{OUT}(2)
TPS766**xxyz**	**XX** is nominal output voltage (for example, 28 = 2.8V, 01 = Adjustable).(3) **Y** is package designator. **Z** is package quantity.

(1) For the most current package and ordering information see the Package Option Addendum at the end of this document, or see the TI website at www.ti.com.
(2) Output voltages from 1.5 V to 5.0 V in 50-mV increments are available through the use of innovative factory EEPROM programming; minimum order quantities may apply. Contact factory for details and availability.
(3) The TPS76601 is programmable using an external resistor divider (see *Application Information*).

ABSOLUTE MAXIMUM RATINGS

Over operating free-air temperature range (unless otherwise noted).(1)

PARAMETER		TPS766xx	UNIT
V_I	Input voltage range(2)	–0.3 to 13.5	V
	Voltage range at $\overline{EN}$	–0.3 to 16.5	V
	Maximum PG voltage	16.5	V
	Peak output current	Internally limited	
	Continuous total power dissipation	See Dissipation Ratings Table	
V_O	Output voltage (OUT, FB)	7	V
T_J	Operating virtual junction temperature range	–40 to +125	°C
T_{stg}	Storage temperature range	–65 to +150	°C
	ESD rating, HBM	2	kV

(1) Stresses above these ratings may cause permanent damage. Exposure to absolute maximum conditions for extended periods may degrade device reliability. These are stress ratings only, and functional operation of the device at these or any other conditions beyond those specified is not implied.
(2) All voltage values are with respect to network terminal ground.

DISSIPATION RATINGS

PACKAGE	AIR FLOW (CFM)	T_A < +25°C POWER RATING	DERATING FACTOR ABOVE T_A = +25°C	T_A = +70°C POWER RATING	T_A = +85°C POWER RATING
D	0	568 mW	5.68 mW/°C	312 mW	227 mW
	250	904 mW	9.04 mW/°C	497 mW	361 mW

RECOMMENDED OPERATING CONDITIONS

		MIN	MAX	UNIT
V_I	Input voltage(1)	2.7	10	V
V_O	Output voltage range	1.2	5.5	V
I_O	Output current(2)	0	250	mA
T_J	Operating virtual junction temperature(2)	–40	125	°C

(1) To calculate the minimum input voltage for your maximum output current, use the following equation: $V_{I(min)} = V_{O(max)} + V_{DO(max\ load)}$
(2) Continuous current and operating junction temperature are limited by internal protection circuitry, but it is not recommended that the device operate under conditions beyond those specified in this table for extended periods of time.

Copyright © 1999–2009, Texas Instruments Incorporated

ELECTRICAL CHARACTERISTICS

Over recommended operating free-air temperature range, $V_i = V_{O(typ)} + 1$ V, $I_O = 10$ µA, $\overline{EN} = 0$ V, $C_O = 4.7$ µF (unless otherwise noted).

PARAMETER		TEST CONDITIONS		MIN	TYP	MAX	UNIT
Output voltage (10 µA to 250 mA load)(1)	TPS76601	5.5 V ≥ V_O ≥ 1.25 V,	T_J = +25°C		V_O		V
		5.5 V ≥ V_O ≥ 1.25 V,	T_J = –40°C to +125°C	0.97 V_O		1.03 V_O	
	TPS76615	T_J = +25°C,	2.7 V < V_{IN} < 10 V		1.5		
		T_J = –40°C to +125°C,	2.7 V < V_{IN} < 10 V	1.455		1.545	
	TPS76618	T_J = +25°C,	2.8 V < V_{IN} < 10 V		1.8		
		T_J = –40°C to +125°C,	2.8 V < V_{IN} < 10 V	1.746		1.854	
	TPS76625	T_J = +25°C,	3.5 V < V_{IN} < 10 V		2.5		
		T_J = –40°C to +125°C,	3.5 V < V_{IN} < 10 V	2.425		2.575	
	TPS76627	T_J = +25°C,	3.7 V < V_{IN} < 10 V		2.7		
		T_J = –40°C to +125°C,	3.7 V < V_{IN} < 10 V	2.619		2.781	
	TPS76628	T_J = +25°C,	3.8 V < V_{IN} < 10 V		2.8		
		T_J = –40°C to +125°C,	3.8 V < V_{IN} < 10 V	2.716		2.884	
	TPS76630	T_J = +25°C,	4.0 V < V_{IN} < 10 V		3.0		
		T_J = –40°C to +125°C,	4.0 V < V_{IN} < 10 V	2.910		3.090	
	TPS76633	T_J = +25°C,	4.3 V < V_{IN} < 10 V		3.3		
		T_J = –40°C to +125°C,	4.3 V < V_{IN} < 10 V	3.201		3.399	
	TPS76650	T_J = +25°C,	6.0 V < V_{IN} < 10 V		5.0		
		T_J = –40°C to +125°C,	6.0 V < V_{IN} < 10 V	4.850		5.150	
Quiescent current (GND current) $\overline{EN}$ = 0 V(1)		10 µA < I_O < 250 mA,	T_J = +25°C		35		µA
		I_O = 250 mA,	T_J = –40°C to +125°C			50	
Output voltage line regulation ($\Delta V_O/V_O$)(1), (2)		V_O + 1 V < V_I ≤ 10 V,	T_J = +25°C		0.01		%/V
Load regulation		I_O = 10 µA to 250 mA			0.5%		
Output noise voltage		BW = 300 Hz to 50 kHz, C_O = 4.7 µF,	T_J = +25°C		200		µVrms
Output current limit		V_O = 0 V			0.8	1.2	A
Thermal shutdown junction temperature					150		°C
Standby current		$\overline{EN}$ = V_I,	T_J = +25°C, 2.7 V < V_I < 10 V		1		µA
		$\overline{EN}$ = V_I,	T_J = –40°C to +125°C, 2.7 V < V_I < 10 V			10	µA
FB input current	TPS76601	FB = 1.5 V			2		nA
High level enable input voltage				2.0			V
Low level enable input voltage						0.8	V
Power-supply ripple rejection(1)		f = 1 kHz, I_O = 10 µA,	C_O = 4.7 µF, T_J = +25°C		63		dB

(1) Minimum IN operating voltage is 2.7 V or $V_{O(typ)}$ + 1 V, whichever is greater. Maximum IN voltage 10 V.

(2) If $V_O \geq 1.8$ V then $V_{imin} = 2.7$ V, $V_{imax} = 10$ V:

$$\text{Line Reg. (mV)} = (\%/V) \times \frac{V_O(V_{imax} - 2.7\ V)}{100} \times 1000$$

If $V_O \leq 2.5$ V then $V_{imin} = V_O + 1$ V, $V_{imax} = 10$ V:

$$\text{Line Reg. (mV)} = (\%/V) \times \frac{V_O(V_{imax} - (V_O + 1\ V))}{100} \times 1000$$

Copyright © 1999–2009, Texas Instruments Incorporated

ELECTRICAL CHARACTERISTICS (continued)

Over recommended operating free-air temperature range, $V_i = V_{O(typ)} + 1$ V, $I_O = 10$ µA, $\overline{EN} = 0$ V, $C_O = 4.7$ µF (unless otherwise noted).

PARAMETER			TEST CONDITIONS		MIN	TYP	MAX	UNIT
PG	Minimum input voltage for valid PG		$I_{O(PG)}$ = 300 µA			1.1		
	Trip threshold voltage		V_O decreasing		92		98	$\%V_O$
	Hysteresis voltage		Measured at V_O			0.5		$\%V_O$
	Output low voltage		V_I = 2.7 V,	$I_{O(PG)}$ = 1 mA		0.15	0.4	V
	Leakage current		$V_{(PG)}$ = 5 V				1	µA
Input current ($\overline{EN}$)			$\overline{EN}$ = 0 V		–1	0	1	µA
			$\overline{EN} = V_I$		–1		1	
Dropout voltage (3)		TPS76628	I_O = 250 mA,	T_J = +25°C		310		mV
			I_O = 250 mA,	T_J = –40°C to +125°C			540	
		TPS76630	I_O = 250 mA,	T_J = +25°C		270		
			I_O = 250 mA,	T_J = –40°C to +125°C			470	
		TPS76633	I_O = 250 mA,	T_J = +25°C		230		
			I_O = 250 mA,	T_J = –40°C to +125°C			400	
		TPS76650	I_O = 250 mA,	T_J = +25°C		140		
			I_O = 250 mA,	T_J = –40°C to +125°C			250	

(3) IN voltage equals $V_{O(Typ)}$ – 100 mV; TPS76601 output voltage set to 3.3 V nominal with external resistor divider. TPS76615, TPS76618, TPS76625, and TPS76627 dropout voltage limited by input voltage range limitations (that is, TPS76630 input voltage must drop to 2.9 V for purpose of this test).

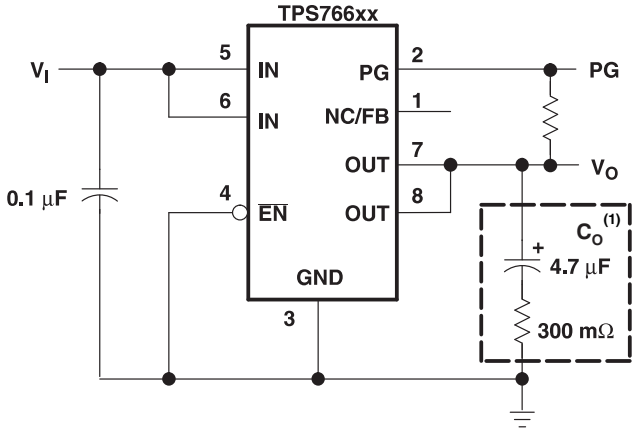

(1) See Applications Information section for capacitor selection details.

Figure 1. Typical Application Configuration for Fixed Output Options

Copyright © 1999–2009, Texas Instruments Incorporated

FUNCTIONAL BLOCK DIAGRAM—ADJUSTABLE VERSION

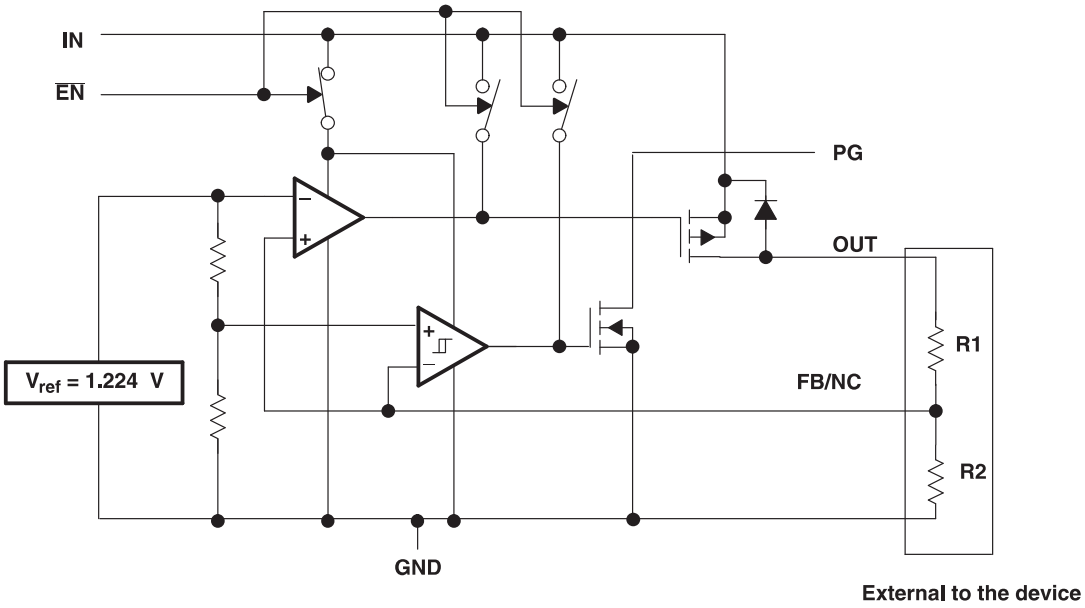

FUNCTIONAL BLOCK DIAGRAM—FIXED-VOLTAGE VERSION

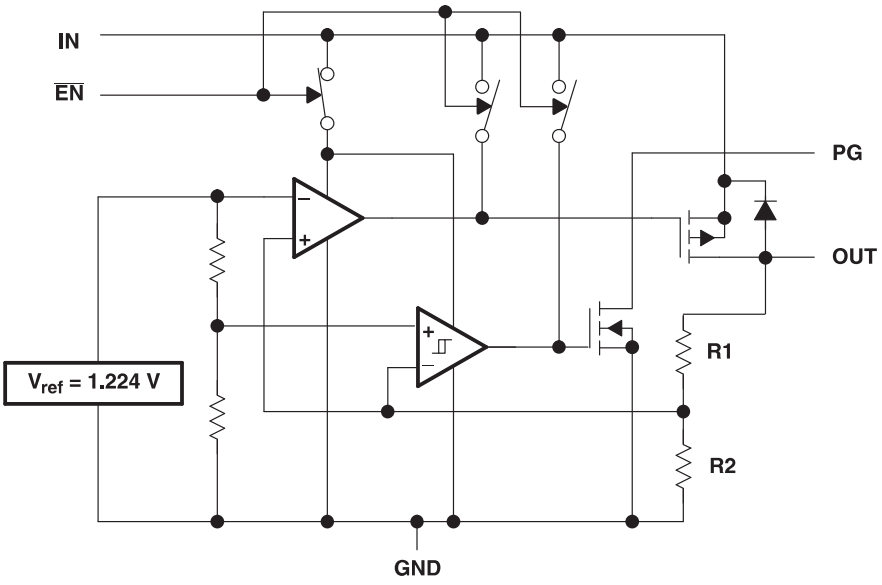

Copyright © 1999–2009, Texas Instruments Incorporated

D PACKAGE
SOIC-8
(TOP VIEW)

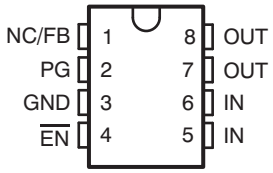

PIN DESCRIPTIONS

TPS766xx		I/O	DESCRIPTION
NAME	NO.		
$\overline{EN}$	4	I	Enable input.
FB/NC	1	I	Feedback input voltage for adjustable device (not connected for fixed options).
GND	3		Regulator ground.
IN	5, 6	I	Input voltage.
OUT	7, 8	O	Regulated output voltage.
PG	2	O	Power good output.

Table 1. Table of Graphs

		FIGURE
Output voltage	vs Load current	Figure 2, Figure 3
	vs Free-air temperature	Figure 4, Figure 5
Ground current	vs Load current	Figure 6, Figure 7
	vs Free-air temperature	Figure 8, Figure 9
Power-supply ripple rejection	vs Frequency	Figure 10
Output spectral noise density	vs Frequency	Figure 11
Output impedance	vs Frequency	Figure 12
Dropout voltage	vs Free-air temperature	Figure 13, Figure 14
Line transient response		Figure 15, Figure 17
Load transient response		Figure 16, Figure 18
Output voltage	vs Time	Figure 19
Dropout voltage	vs Input voltage	Figure 20
Equivalent series resistance (ESR)	vs Output current	Figure 21 to Figure 24
Equivalent series resistance (ESR)	vs Added ceramic capacitance	Figure 25, Figure 26

Copyright © 1999–2009, Texas Instruments Incorporated

TYPICAL CHARACTERISTICS

TPS76633
OUTPUT VOLTAGE
vs
LOAD CURRENT

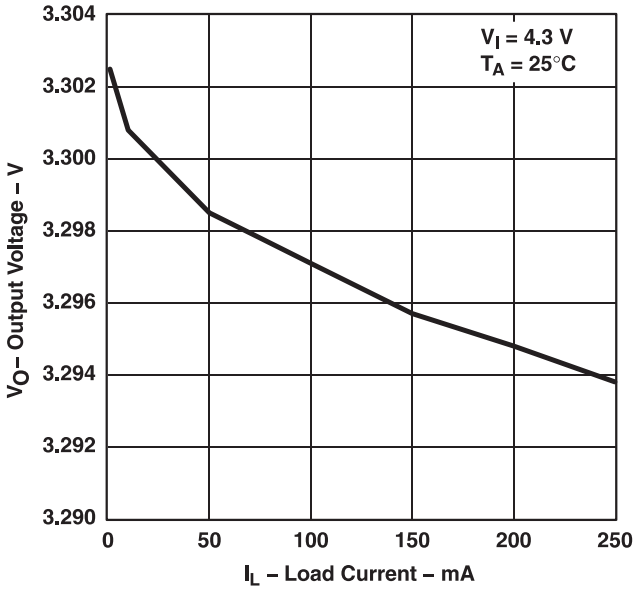

Figure 2.

TPS76615
OUTPUT VOLTAGE
vs
LOAD CURRENT

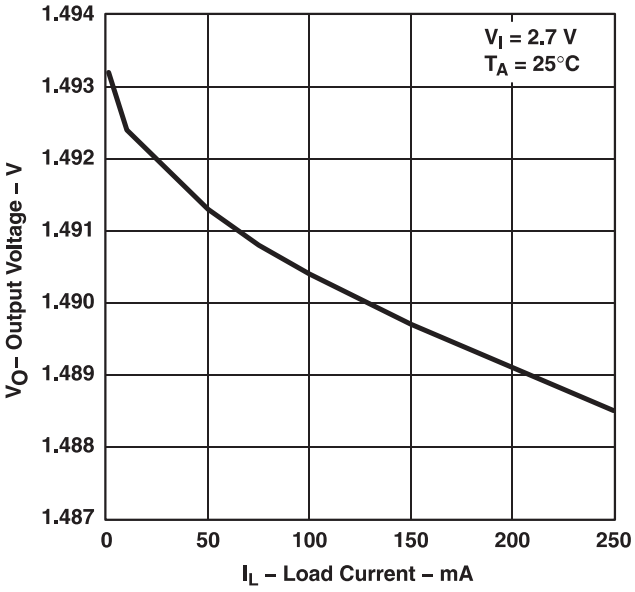

Figure 3.

TPS76633
OUTPUT VOLTAGE
vs
FREE-AIR TEMPERATURE

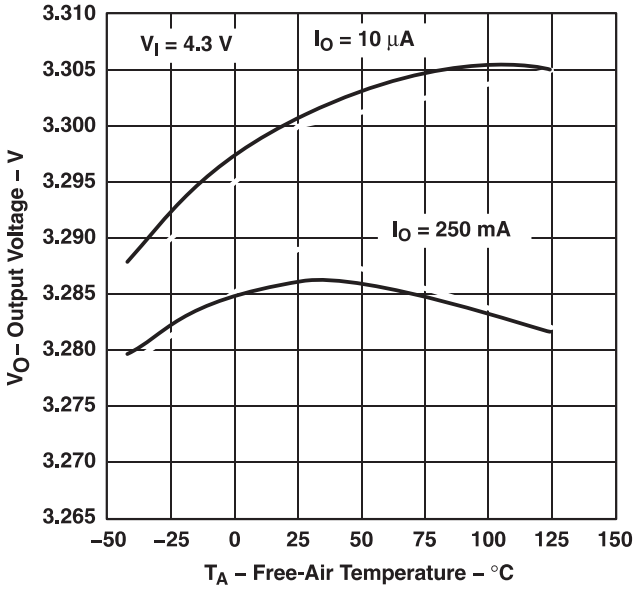

Figure 4.

TPS76615
OUTPUT VOLTAGE
vs
FREE-AIR TEMPERATURE

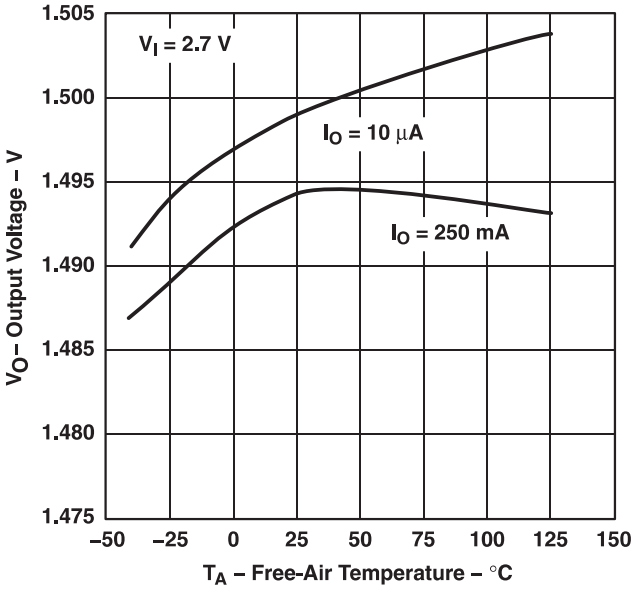

Figure 5.

Copyright © 1999–2009, Texas Instruments Incorporated

TYPICAL CHARACTERISTICS (continued)

TPS76633
GROUND CURRENT
vs
LOAD CURRENT

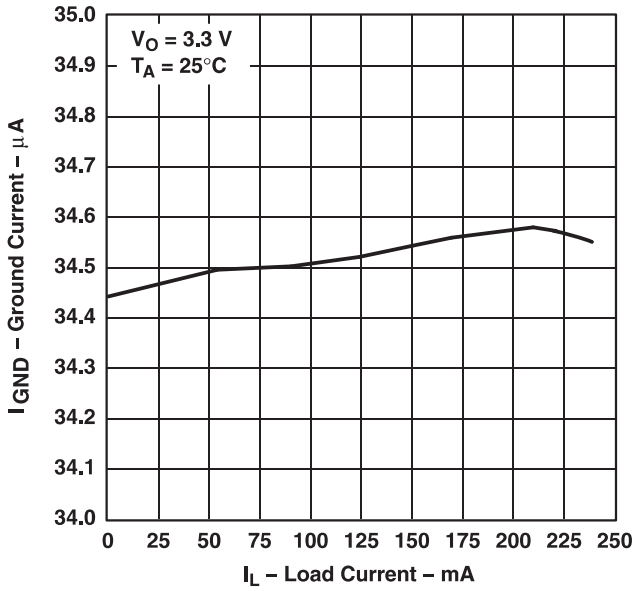

Figure 6.

TPS76615
GROUND CURRENT
vs
LOAD CURRENT

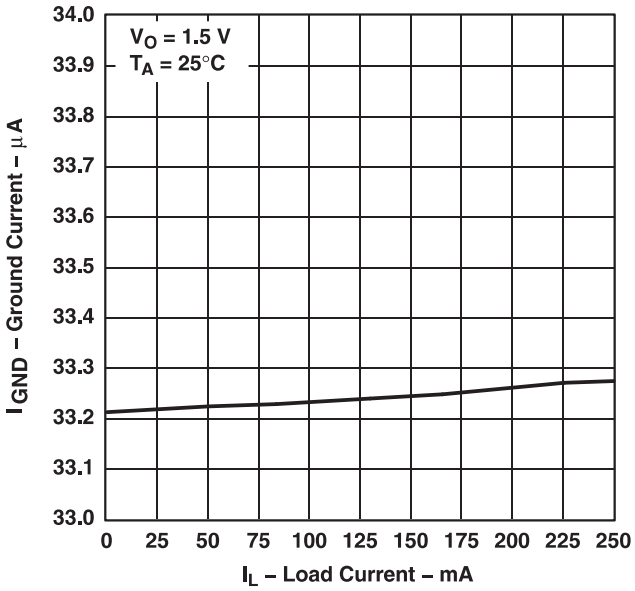

Figure 7.

TPS76633
GROUND CURRENT
vs
FREE-AIR TEMPERATURE

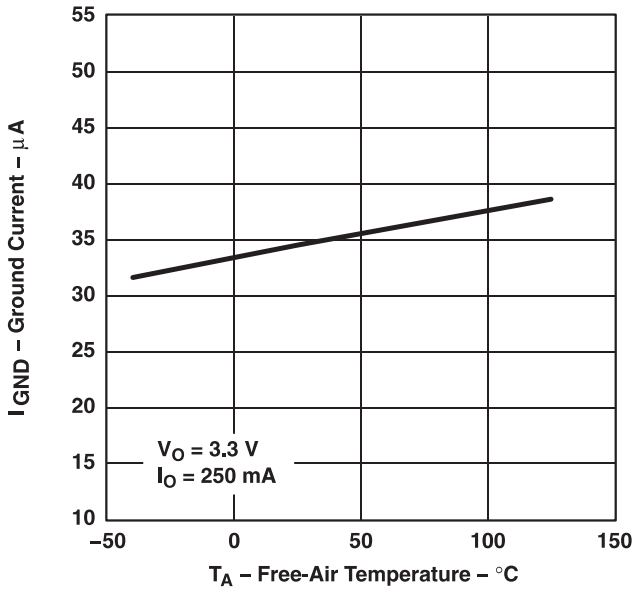

Figure 8.

TPS76615
GROUND CURRENT
vs
FREE-AIR TEMPERATURE

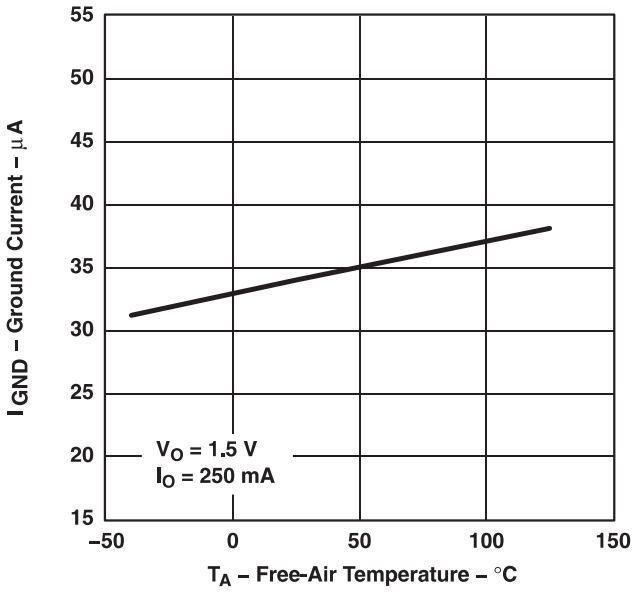

Figure 9.

Copyright © 1999–2009, Texas Instruments Incorporated

TYPICAL CHARACTERISTICS (continued)

TPS76633
POWER-SUPPLY RIPPLE REJECTION
vs
FREQUENCY

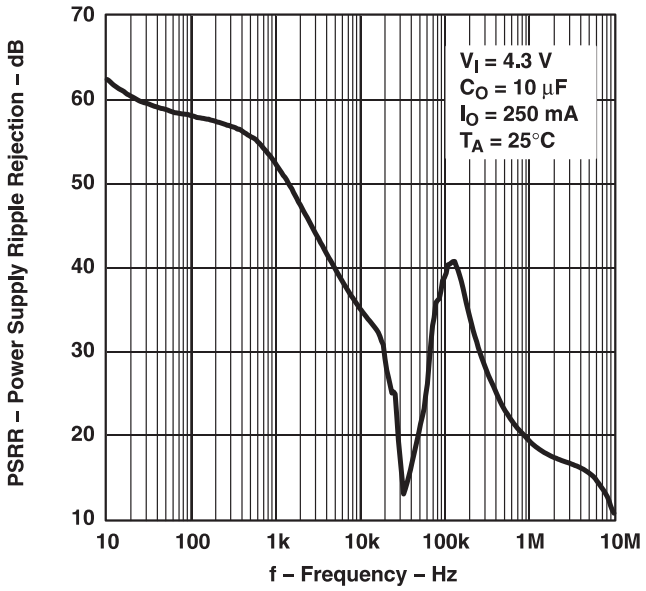

Figure 10.

TPS76633
OUTPUT SPECTRAL NOISE DENSITY
vs
FREQUENCY

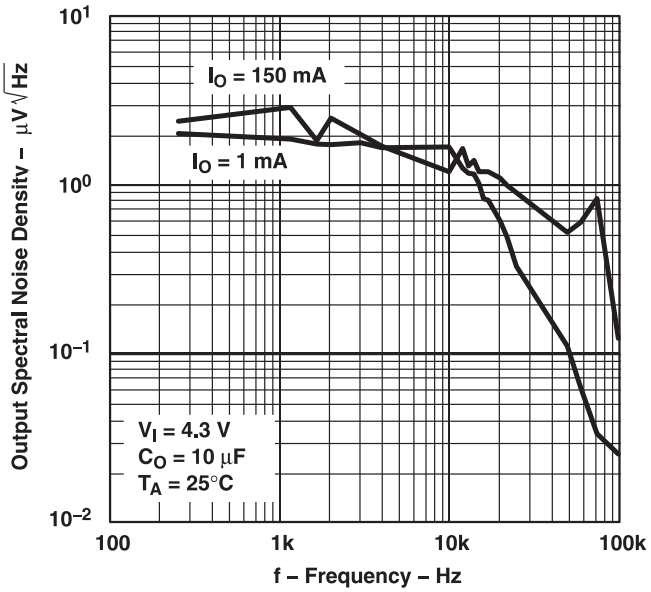

Figure 11.

TPS76633
OUTPUT IMPEDANCE
vs
FREQUENCY

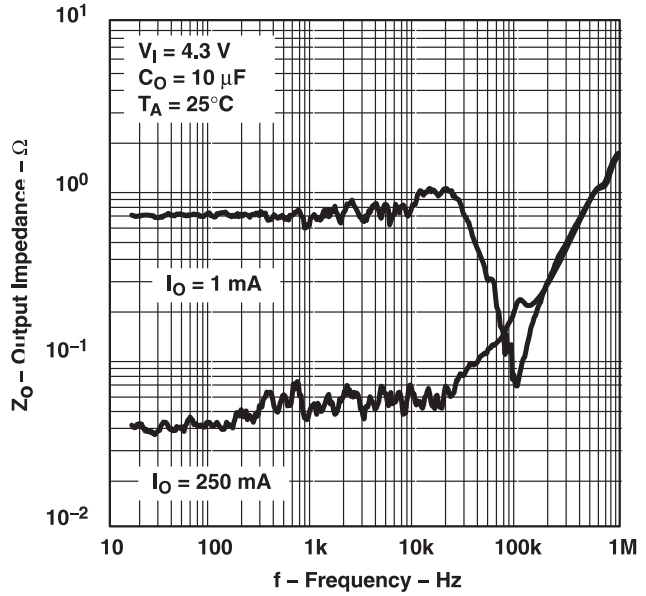

Figure 12.

TPS76650
DROPOUT VOLTAGE
vs
FREE-AIR TEMPEATURE

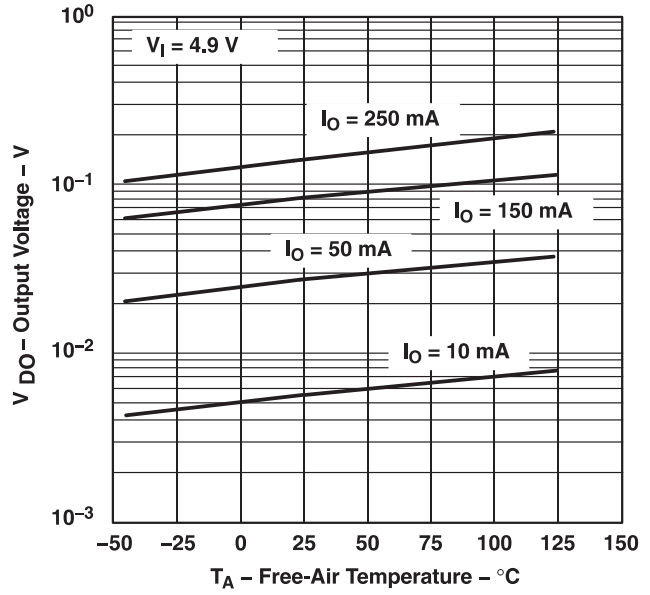

Figure 13.

Copyright © 1999–2009, Texas Instruments Incorporated

TYPICAL CHARACTERISTICS (continued)

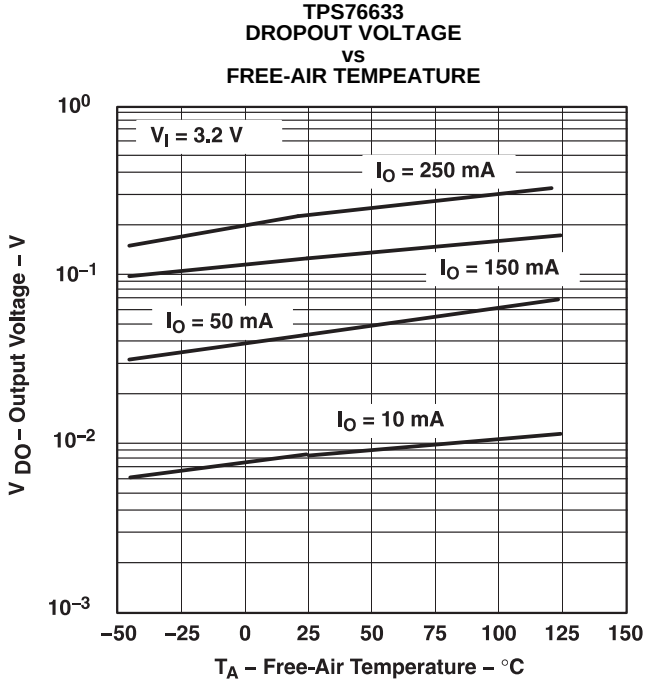

Figure 14.

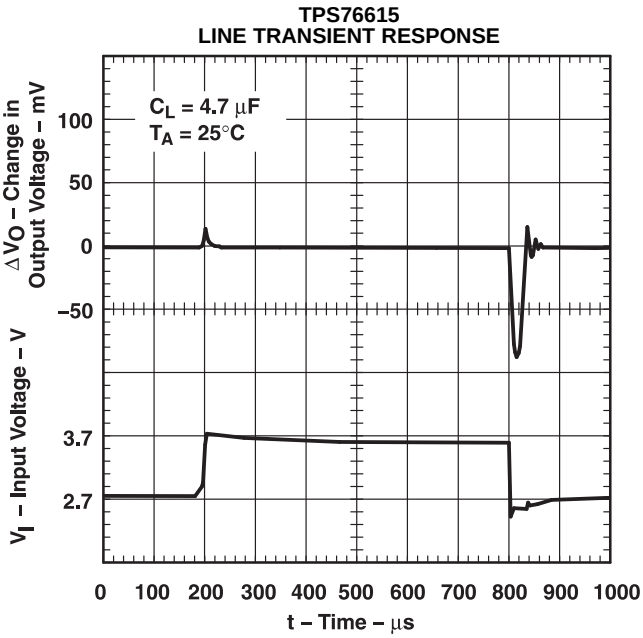

Figure 15.

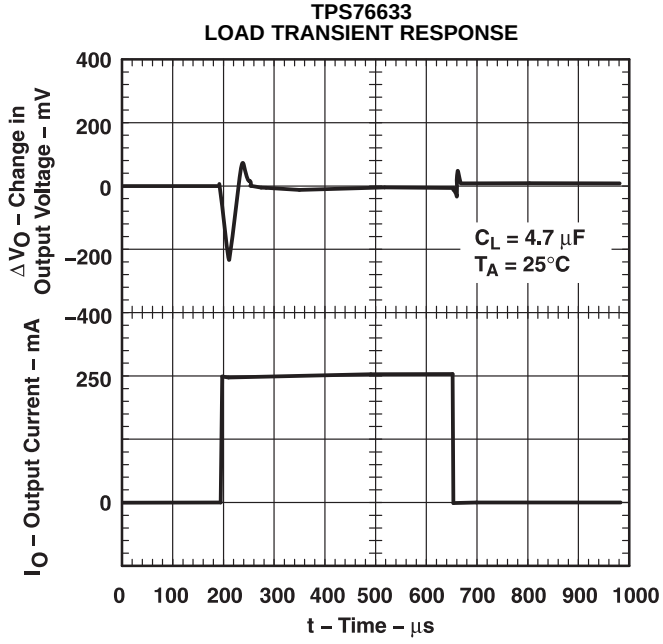

Figure 16.

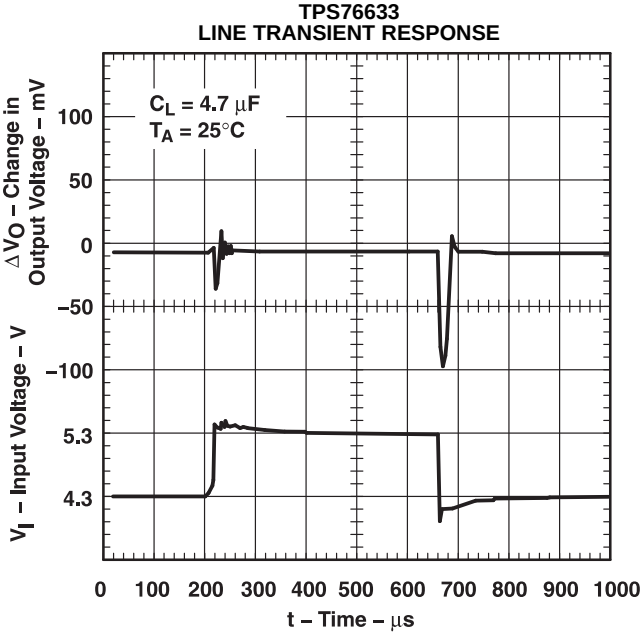

Figure 17.

Copyright © 1999–2009, Texas Instruments Incorporated

TYPICAL CHARACTERISTICS (continued)

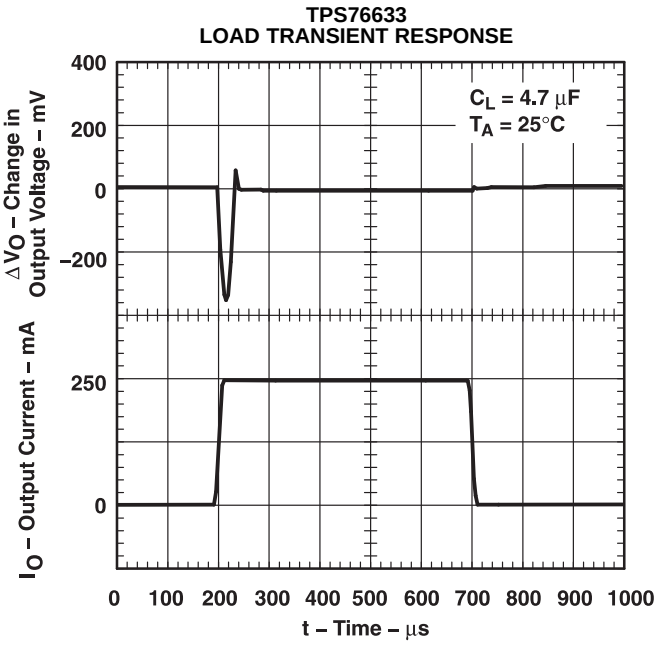

Figure 18.

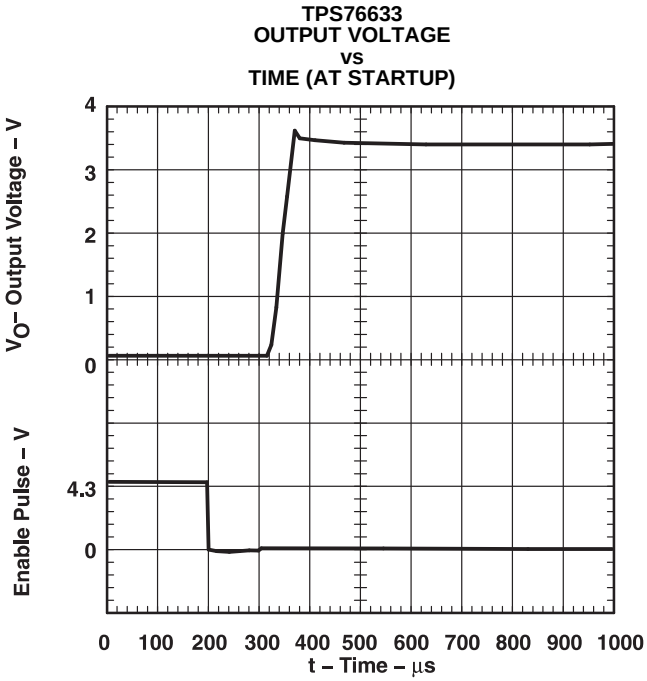

Figure 19.

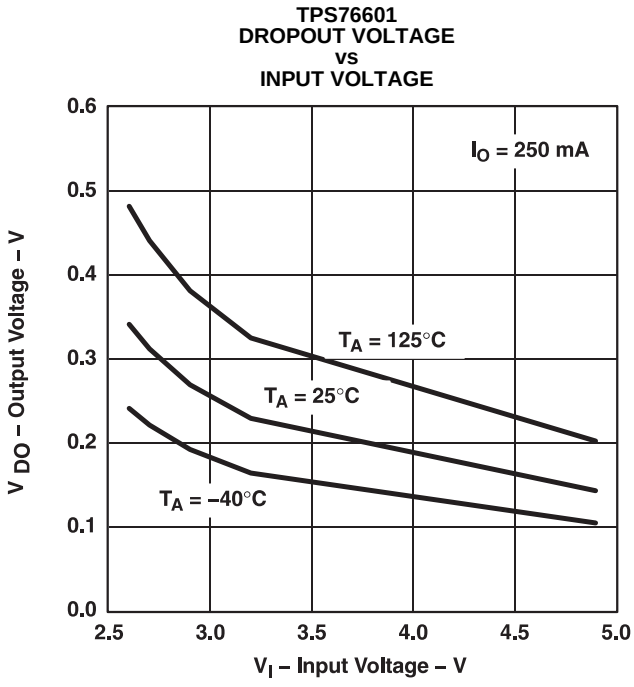

Figure 20.

TYPICAL CHARACTERISTICS (continued)

TYPICAL REGION OF STABILITY
EQUIVALENT SERIES RESISTANCE(1)
vs
OUTPUT CURRENT

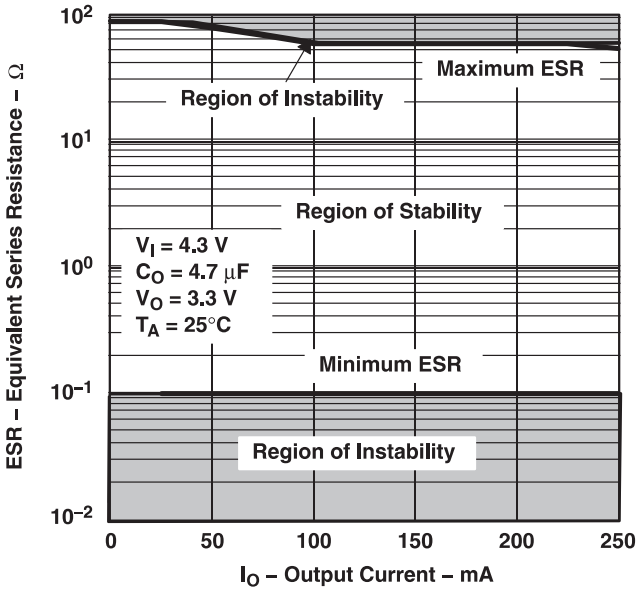

Figure 21.

TYPICAL REGION OF STABILITY
EQUIVALENT SERIES RESISTANCE(1)
vs
OUTPUT CURRENT

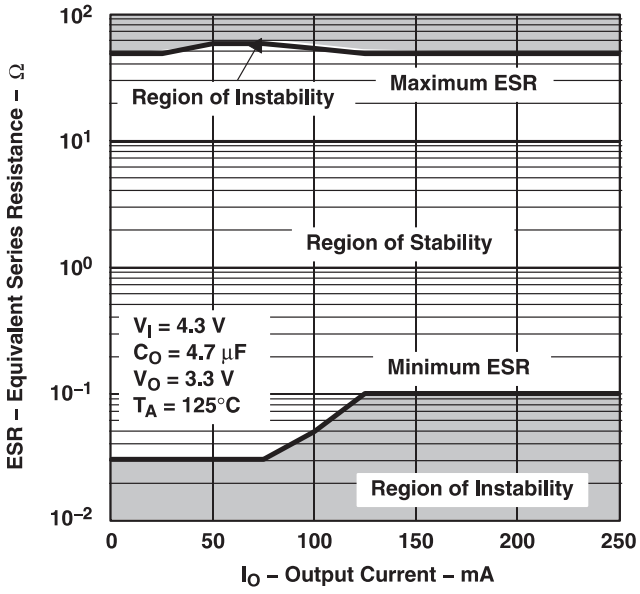

Figure 22.

TYPICAL REGION OF STABILITY
EQUIVALENT SERIES RESISTANCE(1)
vs
OUTPUT CURRENT

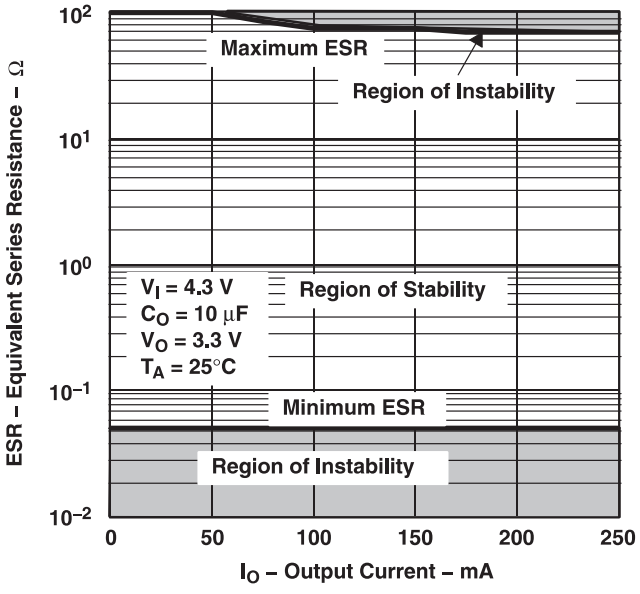

Figure 23.

TYPICAL REGION OF STABILITY
EQUIVALENT SERIES RESISTANCE(1)
vs
OUTPUT CURRENT

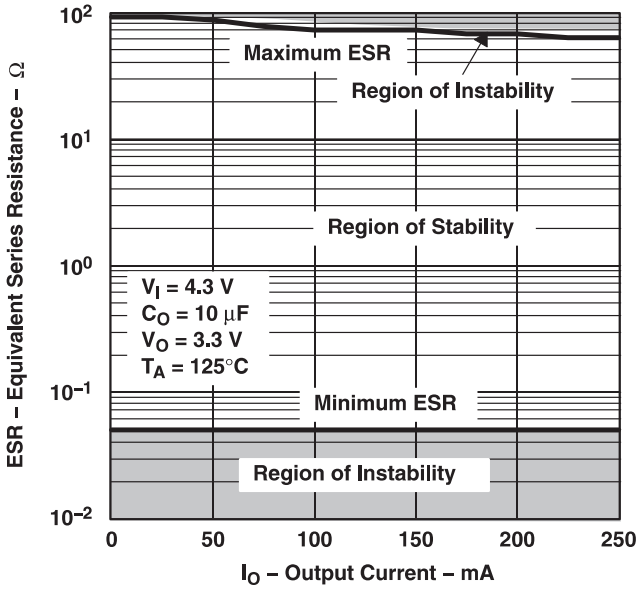

Figure 24.

(1) Equivalent series resistance (ESR) refers to the total series resistance, including the ESR of the capacitor, any series resistance added externally, and PWB trace resistance to C_O.

Copyright © 1999–2009, Texas Instruments Incorporated

TYPICAL CHARACTERISTICS (continued)

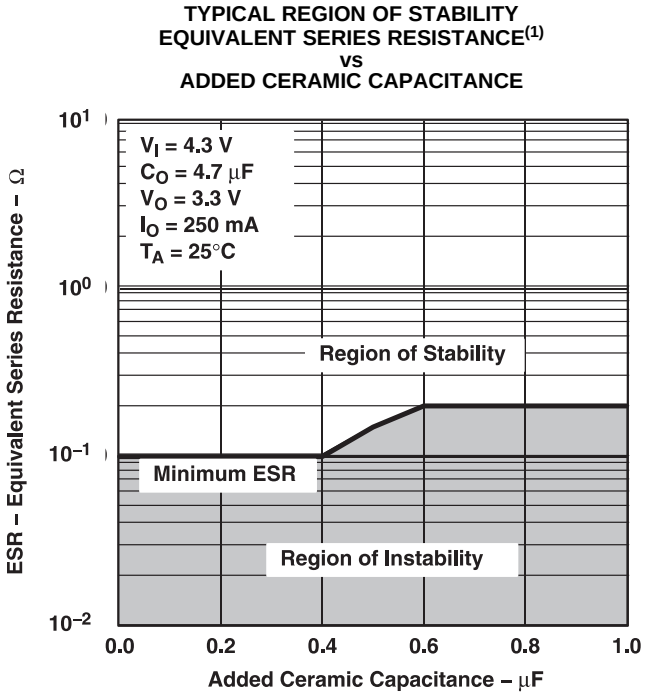

Figure 25.

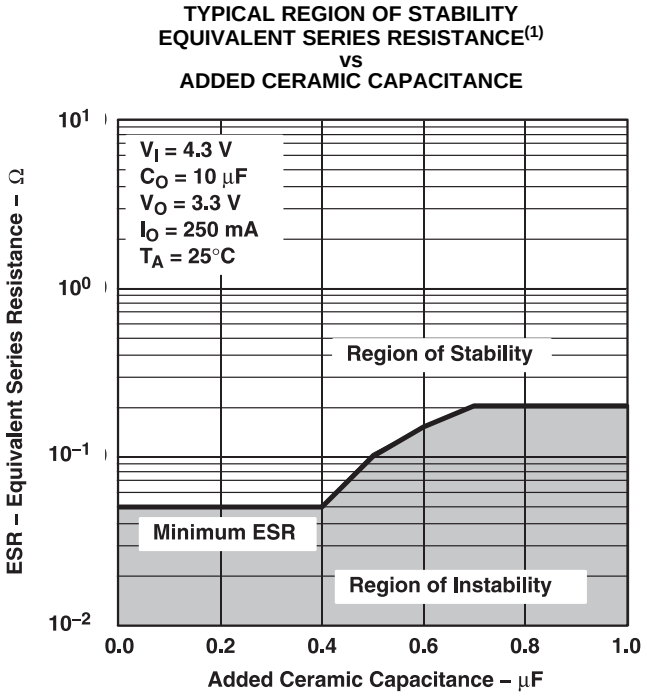

Figure 26.

(1) Equivalent series resistance (ESR) refers to the total series resistance, including the ESR of the capacitor, any series resistance added externally, and PWB trace resistance to C_O.

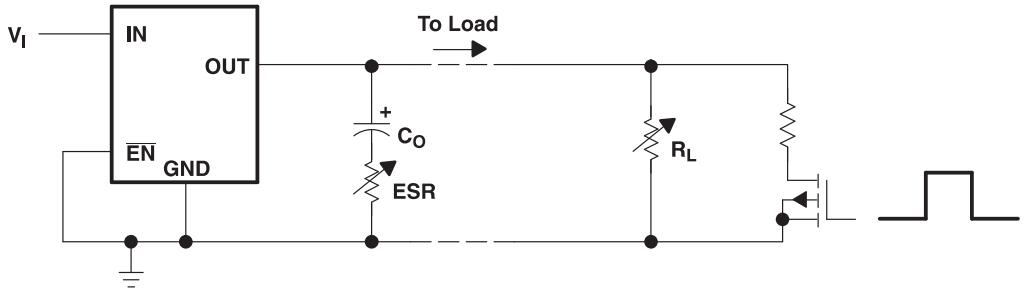

Figure 27. Test Circuit for Typical Regions of Stability (Figure 21 through Figure 24) (Fixed Output Options)

APPLICATION INFORMATION

The TPS766xx family includes eight fixed-output voltage regulators (1.5 V, 1.8 V, 2.5 V, 2.7 V, 2.8 V, 3.0 V, 3.3 V, and 5.0 V), and an adjustable regulator, the TPS76601 (adjustable from 1.25 V to 5.5 V).

DEVICE OPERATION

The TPS766xx features very low quiescent current that remains virtually constant even with varying loads. Conventional LDO regulators use a pnp pass element, the base current of which is directly proportional to the load current through the regulator ($I_B = I_C/\beta$). The TPS766xx uses a PMOS transistor to pass current; because the gate of the PMOS is voltage driven, operating current is low and invariable over the full load range.

Another pitfall associated with the pnp pass element is its tendency to saturate when the device goes into dropout. The resulting drop in β forces an increase in I_B to maintain the load. During power up, this increase in I_B translates to large start-up currents. Systems with limited supply current may fail to start up. In battery-powered systems, it means rapid battery discharge when the voltage decays below the minimum required for regulation. The TPS766xx quiescent current remains low even when the regulator drops out, eliminating both problems.

The TPS766xx family also features a shutdown mode that places the output in the high-impedance state (essentially equal to the feedback-divider resistance) and reduces quiescent current to 1 μA (typ). If the shutdown feature is not used, $\overline{EN}$ should be tied to ground. Response to an enable transition is quick; regulated output voltage is reestablished in typically 160 μs.

MINIMUM LOAD REQUIREMENTS

The TPS766xx family is stable even at zero load; no minimum load is required for operation.

FB—PIN CONNECTION (ADJUSTABLE VERSION ONLY)

The FB pin is an input pin to sense the output voltage and close the loop for the adjustable option. The output voltage is sensed through a resistor divider network to close the loop as shown in Figure 29. Normally, this connection should be as short as possible; however, the connection can be made near a critical circuit to improve performance at that point. Internally, FB connects to a high-impedance, wide-bandwidth amplifier and noise pickup feeds through to the regulator output. Routing the FB connection to minimize or avoid noise pickup is essential.

EXTERNAL CAPACITOR REQUIREMENTS

An input capacitor is not usually required; however, a ceramic bypass capacitor (0.047 μF or larger) improves load transient response and noise rejection if the TPS766xx is located more than a few inches from the power supply. A higher-capacitance electrolytic capacitor may be necessary if large (hundreds of milliamps) load transients with fast rise times are anticipated.

Like most low dropout regulators, the TPS766xx requires an output capacitor connected between OUT and GND to stabilize the internal control loop. The minimum recommended capacitance value is 4.7 μF and the ESR (equivalent series resistance) must be between 300 mW and 20 Ω. Capacitor values 4.7 μF or larger are acceptable, provided the ESR is less than 20 Ω. Solid tantalum electrolytic and aluminum electrolytic capacitors are all suitable, provided they meet the requirements described previously. Ceramic capacitors, with series resistors that are sized to meet the previously described requirements, may also be used.

Copyright © 1999–2009, Texas Instruments Incorporated

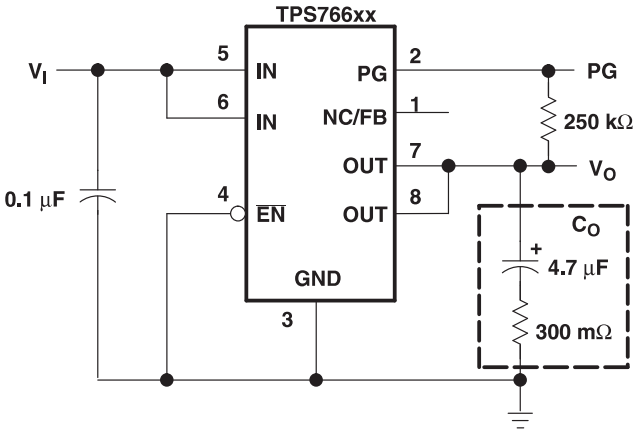

Figure 28. Typical Application Circuit (Fixed Versions)

PROGRAMMING THE TPS76601 ADJUSTABLE LDO REGULATOR

The output voltage of the TPS76601 adjustable regulator is programmed using an external resistor divider as shown in Figure 29. The output voltage is calculated using:

$$V_O = V_{ref} \times \left(1 + \frac{R1}{R2}\right) \quad (1)$$

Where:

- V_{ref} = 1.224 V typ (the internal reference voltage)

Resistors R1 and R2 should be chosen for approximately 7-µA divider current. Lower value resistors can be used but offer no inherent advantage and waste more power. Higher values should be avoided because leakage currents at FB increase the output voltage error. The recommended design procedure is to choose R2 = 169 kΩ to set the divider current at 7 µA, and then calculate R1 using:

$$R1 = \left(\frac{V_O}{V_{ref}} - 1\right) \times R2 \quad (2)$$

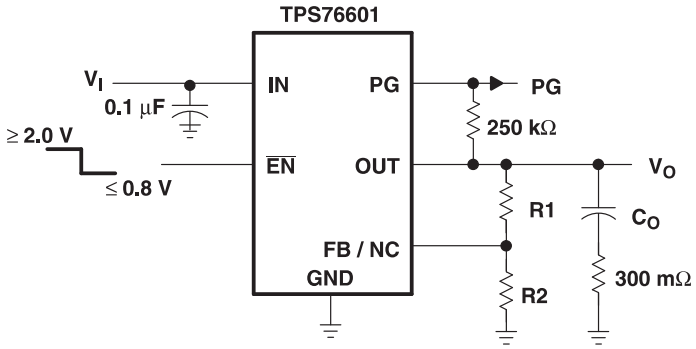

OUTPUT VOLTAGE PROGRAMMING GUIDE

OUTPUT VOLTAGE	R1	R2	UNIT
2.5 V	174	169	kΩ
3.3 V	287	169	kΩ
3.6 V	324	169	kΩ
4.0 V	383	169	kΩ
5.0 V	523	169	kΩ

Figure 29. TPS76601 Adjustable LDO Regulator Programming

Copyright © 1999–2009, Texas Instruments Incorporated

POWER-GOOD INDICATOR

The TPS766xx features a power-good (PG) output that can be used to monitor the status of the regulator. The internal comparator monitors the output voltage: when the output drops to between 92% and 98% of its nominal regulated value, the PG output transistor turns on, taking the signal low. The open-drain output requires a pullup resistor. If not used, it can be left floating. PG can be used to drive power-on reset circuitry or used as a low-battery indicator.

REGULATOR PROTECTION

The TPS766xx PMOS-pass transistor has a built-in back diode that conducts reverse currents when the input voltage drops below the output voltage (for example, during power down). Current is conducted from the output to the input and is not internally limited. When extended reverse voltage is anticipated, external limiting may be appropriate.

The TPS766xx also features internal current limiting and thermal protection. During normal operation, the TPS766xx limits output current to approximately 0.8 A (typ). When current limiting engages, the output voltage scales back linearly until the overcurrent condition ends. While current limiting is designed to prevent gross device failure, care should be taken not to exceed the power dissipation ratings of the package. If the temperature of the device exceeds +150°C (typ), thermal-protection circuitry shuts it down. Once the device has cooled below +130°C (typ), regulator operation resumes.

POWER DISSIPATION AND JUNCTION TEMPERATURE

Specified regulator operation is assured to a junction temperature of +125°C; the maximum junction temperature should be restricted to +125°C under normal operating conditions. This restriction limits the power dissipation the regulator can handle in any given application. To ensure the junction temperature is within acceptable limits, calculate the maximum allowable dissipation, $P_{D(max)}$, and the actual dissipation, P_D, which must be less than or equal to $P_{D(max)}$.

The maximum-power-dissipation limit is determined using the following equation:

$$P_{D(max)} = \frac{T_J max - T_A}{R_{\theta JA}} \quad (3)$$

Where:

- $T_J max$ is the maximum allowable junction temperature;
- $R_{\theta JA}$ is the thermal resistance junction-to-ambient for the package (that is, 176°C/W for the 8-terminal SOIC); and
- T_A is the ambient temperature.

The regulator dissipation is calculated using:

$$P_D = \left(V_I - V_O\right) \times I_O \quad (4)$$

Power dissipation resulting from quiescent current is negligible. Excessive power dissipation triggers the thermal protection circuit.

Copyright © 1999–2009, Texas Instruments Incorporated

PACKAGING INFORMATION

Orderable Device	Status (1)	Package Type	Package Drawing	Pins	Package Qty	Eco Plan (2)	Lead/Ball Finish (6)	MSL Peak Temp (3)	Op Temp (°C)	Device Marking (4/5)	Samples
TPS76601D	ACTIVE	SOIC	D	8	75	Green (RoHS & no Sb/Br)	CU NIPDAU	Level-1-260C-UNLIM		76601	Samples
TPS76601DG4	ACTIVE	SOIC	D	8	75	Green (RoHS & no Sb/Br)	CU NIPDAU	Level-1-260C-UNLIM		76601	Samples
TPS76601DR	ACTIVE	SOIC	D	8	2500	Green (RoHS & no Sb/Br)	CU NIPDAU	Level-1-260C-UNLIM		76601	Samples
TPS76615D	ACTIVE	SOIC	D	8	75	Green (RoHS & no Sb/Br)	CU NIPDAU	Level-1-260C-UNLIM		76615	Samples
TPS76615DG4	ACTIVE	SOIC	D	8	75	Green (RoHS & no Sb/Br)	CU NIPDAU	Level-1-260C-UNLIM		76615	Samples
TPS76615DR	ACTIVE	SOIC	D	8	2500	Green (RoHS & no Sb/Br)	CU NIPDAU	Level-1-260C-UNLIM		76615	Samples
TPS76615DRG4	ACTIVE	SOIC	D	8	2500	Green (RoHS & no Sb/Br)	CU NIPDAU	Level-1-260C-UNLIM		76615	Samples
TPS76618D	ACTIVE	SOIC	D	8	75	Green (RoHS & no Sb/Br)	CU NIPDAU	Level-1-260C-UNLIM		76618	Samples
TPS76618DG4	ACTIVE	SOIC	D	8	75	Green (RoHS & no Sb/Br)	CU NIPDAU	Level-1-260C-UNLIM		76618	Samples
TPS76618DR	ACTIVE	SOIC	D	8	2500	Green (RoHS & no Sb/Br)	CU NIPDAU	Level-1-260C-UNLIM		76618	Samples
TPS76618DRG4	ACTIVE	SOIC	D	8	2500	Green (RoHS & no Sb/Br)	CU NIPDAU	Level-1-260C-UNLIM		76618	Samples
TPS76625D	ACTIVE	SOIC	D	8	75	Green (RoHS & no Sb/Br)	CU NIPDAU	Level-1-260C-UNLIM		76625	Samples
TPS76625DG4	ACTIVE	SOIC	D	8	75	Green (RoHS & no Sb/Br)	CU NIPDAU	Level-1-260C-UNLIM		76625	Samples
TPS76625DR	ACTIVE	SOIC	D	8	2500	Green (RoHS & no Sb/Br)	CU NIPDAU	Level-1-260C-UNLIM		76625	Samples
TPS76625DRG4	ACTIVE	SOIC	D	8	2500	Green (RoHS & no Sb/Br)	CU NIPDAU	Level-1-260C-UNLIM		76625	Samples
TPS76628D	ACTIVE	SOIC	D	8	75	Green (RoHS & no Sb/Br)	CU NIPDAU	Level-1-260C-UNLIM		76628	Samples
TPS76628DR	ACTIVE	SOIC	D	8	2500	Green (RoHS & no Sb/Br)	CU NIPDAU	Level-1-260C-UNLIM		76628	Samples

Orderable Device	Status (1)	Package Type	Package Drawing	Pins	Package Qty	Eco Plan (2)	Lead/Ball Finish (6)	MSL Peak Temp (3)	Op Temp (°C)	Device Marking (4/5)	Samples
TPS76630D	ACTIVE	SOIC	D	8	75	Green (RoHS & no Sb/Br)	CU NIPDAU	Level-1-260C-UNLIM		76630	Samples
TPS76630DG4	ACTIVE	SOIC	D	8	75	Green (RoHS & no Sb/Br)	CU NIPDAU	Level-1-260C-UNLIM		76630	Samples
TPS76633D	ACTIVE	SOIC	D	8	75	Green (RoHS & no Sb/Br)	CU NIPDAU	Level-1-260C-UNLIM	-40 to 125	76633	Samples
TPS76633DG4	ACTIVE	SOIC	D	8	75	Green (RoHS & no Sb/Br)	CU NIPDAU	Level-1-260C-UNLIM	-40 to 125	76633	Samples
TPS76633DR	ACTIVE	SOIC	D	8	2500	Green (RoHS & no Sb/Br)	CU NIPDAU	Level-1-260C-UNLIM	-40 to 125	76633	Samples
TPS76633DRG4	ACTIVE	SOIC	D	8	2500	Green (RoHS & no Sb/Br)	CU NIPDAU	Level-1-260C-UNLIM	-40 to 125	76633	Samples
TPS76650D	ACTIVE	SOIC	D	8	75	Green (RoHS & no Sb/Br)	CU NIPDAU	Level-1-260C-UNLIM		76650	Samples
TPS76650DR	ACTIVE	SOIC	D	8	2500	Green (RoHS & no Sb/Br)	CU NIPDAU	Level-1-260C-UNLIM		76650	Samples
TPS76650DRG4	ACTIVE	SOIC	D	8	2500	Green (RoHS & no Sb/Br)	CU NIPDAU	Level-1-260C-UNLIM		76650	Samples

(1) The marketing status values are defined as follows:
ACTIVE: Product device recommended for new designs.
LIFEBUY: TI has announced that the device will be discontinued, and a lifetime-buy period is in effect.
NRND: Not recommended for new designs. Device is in production to support existing customers, but TI does not recommend using this part in a new design.
PREVIEW: Device has been announced but is not in production. Samples may or may not be available.
OBSOLETE: TI has discontinued the production of the device.

(2) Eco Plan - The planned eco-friendly classification: Pb-Free (RoHS), Pb-Free (RoHS Exempt), or Green (RoHS & no Sb/Br) - please check http://www.ti.com/productcontent for the latest availability information and additional product content details.
TBD: The Pb-Free/Green conversion plan has not been defined.
Pb-Free (RoHS): TI's terms "Lead-Free" or "Pb-Free" mean semiconductor products that are compatible with the current RoHS requirements for all 6 substances, including the requirement that lead not exceed 0.1% by weight in homogeneous materials. Where designed to be soldered at high temperatures, TI Pb-Free products are suitable for use in specified lead-free processes.
Pb-Free (RoHS Exempt): This component has a RoHS exemption for either 1) lead-based flip-chip solder bumps used between the die and package, or 2) lead-based die adhesive used between the die and leadframe. The component is otherwise considered Pb-Free (RoHS compatible) as defined above.
Green (RoHS & no Sb/Br): TI defines "Green" to mean Pb-Free (RoHS compatible), and free of Bromine (Br) and Antimony (Sb) based flame retardants (Br or Sb do not exceed 0.1% by weight in homogeneous material)

(3) MSL, Peak Temp. - The Moisture Sensitivity Level rating according to the JEDEC industry standard classifications, and peak solder temperature.

(4) There may be additional marking, which relates to the logo, the lot trace code information, or the environmental category on the device.

(5) Multiple Device Markings will be inside parentheses. Only one Device Marking contained in parentheses and separated by a "~" will appear on a device. If a line is indented then it is a continuation of the previous line and the two combined represent the entire Device Marking for that device.

(6) Lead/Ball Finish - Orderable Devices may have multiple material finish options. Finish options are separated by a vertical ruled line. Lead/Ball Finish values may wrap to two lines if the finish value exceeds the maximum column width.

Important Information and Disclaimer: The information provided on this page represents TI's knowledge and belief as of the date that it is provided. TI bases its knowledge and belief on information provided by third parties, and makes no representation or warranty as to the accuracy of such information. Efforts are underway to better integrate information from third parties. TI has taken and continues to take reasonable steps to provide representative and accurate information but may not have conducted destructive testing or chemical analysis on incoming materials and chemicals. TI and TI suppliers consider certain information to be proprietary, and thus CAS numbers and other limited information may not be available for release.

In no event shall TI's liability arising out of such information exceed the total purchase price of the TI part(s) at issue in this document sold by TI to Customer on an annual basis.

TAPE AND REEL INFORMATION

REEL DIMENSIONS

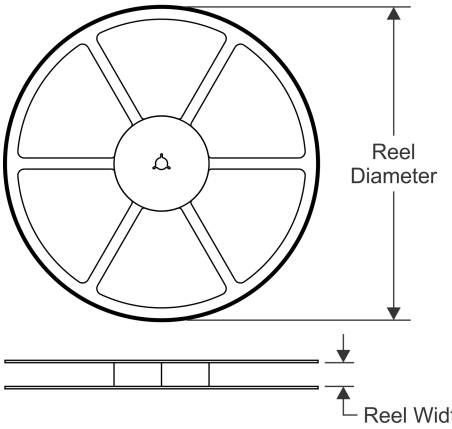

TAPE DIMENSIONS

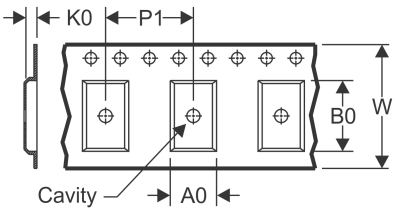

A0	Dimension designed to accommodate the component width
B0	Dimension designed to accommodate the component length
K0	Dimension designed to accommodate the component thickness
W	Overall width of the carrier tape
P1	Pitch between successive cavity centers

QUADRANT ASSIGNMENTS FOR PIN 1 ORIENTATION IN TAPE

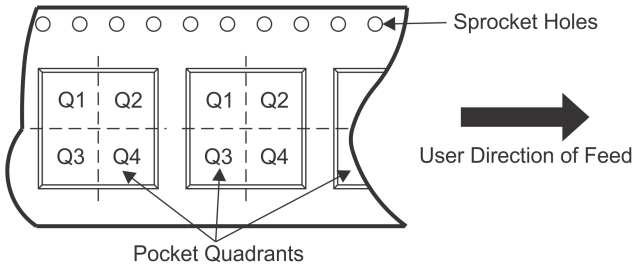

*All dimensions are nominal

Device	Package Type	Package Drawing	Pins	SPQ	Reel Diameter (mm)	Reel Width W1 (mm)	A0 (mm)	B0 (mm)	K0 (mm)	P1 (mm)	W (mm)	Pin1 Quadrant
TPS76601DR	SOIC	D	8	2500	330.0	12.4	6.4	5.2	2.1	8.0	12.0	Q1
TPS76615DR	SOIC	D	8	2500	330.0	12.4	6.4	5.2	2.1	8.0	12.0	Q1
TPS76618DR	SOIC	D	8	2500	330.0	12.4	6.4	5.2	2.1	8.0	12.0	Q1
TPS76625DR	SOIC	D	8	2500	330.0	12.4	6.4	5.2	2.1	8.0	12.0	Q1
TPS76628DR	SOIC	D	8	2500	330.0	12.4	6.4	5.2	2.1	8.0	12.0	Q1
TPS76633DR	SOIC	D	8	2500	330.0	12.4	6.4	5.2	2.1	8.0	12.0	Q1
TPS76633DR	SOIC	D	8	2500	330.0	12.4	6.4	5.2	2.1	8.0	12.0	Q1
TPS76650DR	SOIC	D	8	2500	330.0	12.4	6.4	5.2	2.1	8.0	12.0	Q1

TAPE AND REEL BOX DIMENSIONS

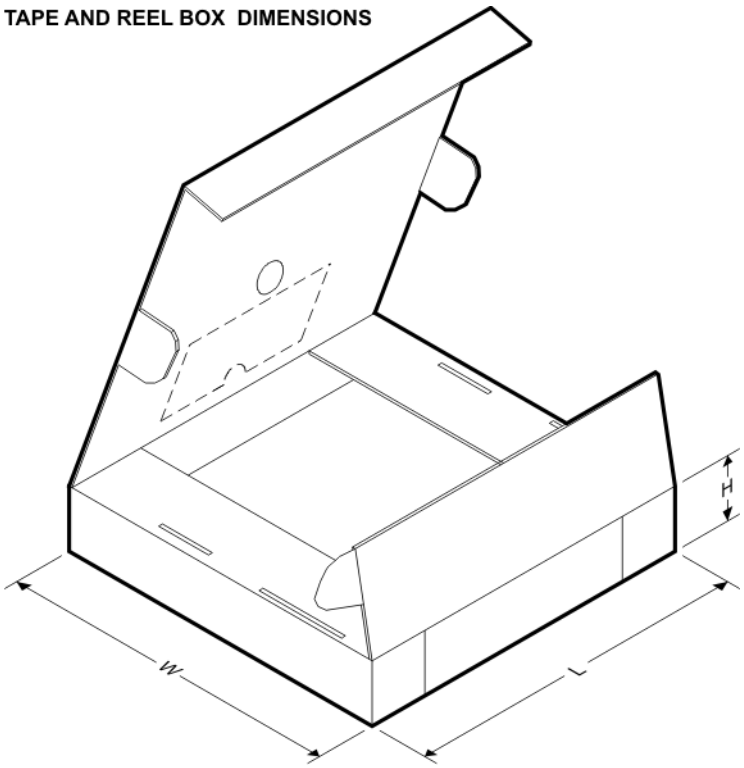

*All dimensions are nominal

Device	Package Type	Package Drawing	Pins	SPQ	Length (mm)	Width (mm)	Height (mm)
TPS76601DR	SOIC	D	8	2500	367.0	367.0	38.0
TPS76615DR	SOIC	D	8	2500	367.0	367.0	38.0
TPS76618DR	SOIC	D	8	2500	367.0	367.0	38.0
TPS76625DR	SOIC	D	8	2500	367.0	367.0	38.0
TPS76628DR	SOIC	D	8	2500	367.0	367.0	38.0
TPS76633DR	SOIC	D	8	2500	367.0	367.0	38.0
TPS76633DR	SOIC	D	8	2500	367.0	367.0	35.0
TPS76650DR	SOIC	D	8	2500	367.0	367.0	38.0

D (R–PDSO–G8) PLASTIC SMALL OUTLINE

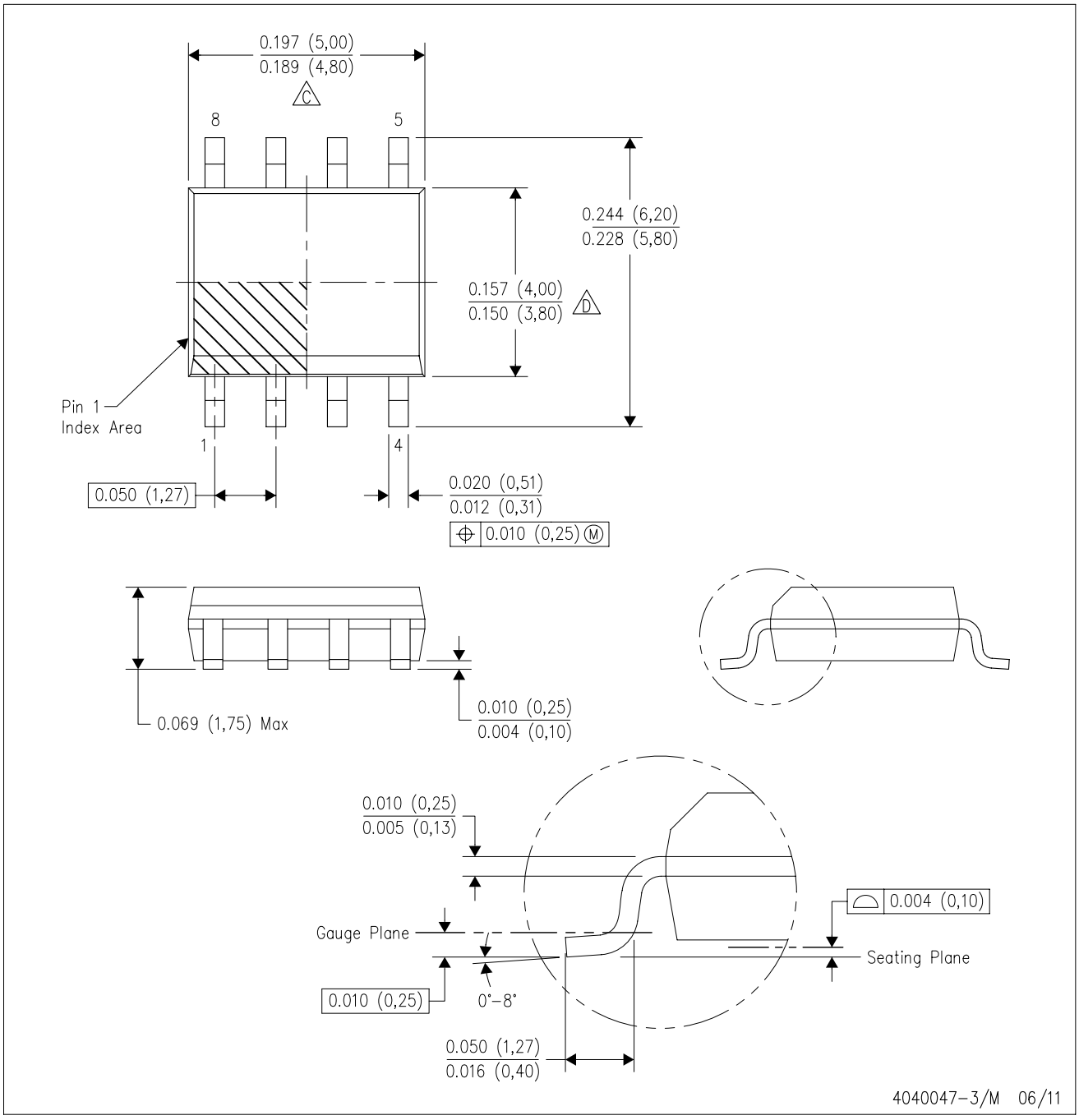

NOTES:
A. All linear dimensions are in inches (millimeters).
B. This drawing is subject to change without notice.
C. Body length does not include mold flash, protrusions, or gate burrs. Mold flash, protrusions, or gate burrs shall not exceed 0.006 (0,15) each side.
D. Body width does not include interlead flash. Interlead flash shall not exceed 0.017 (0,43) each side.
E. Reference JEDEC MS–012 variation AA.

D (R–PDSO–G8) PLASTIC SMALL OUTLINE

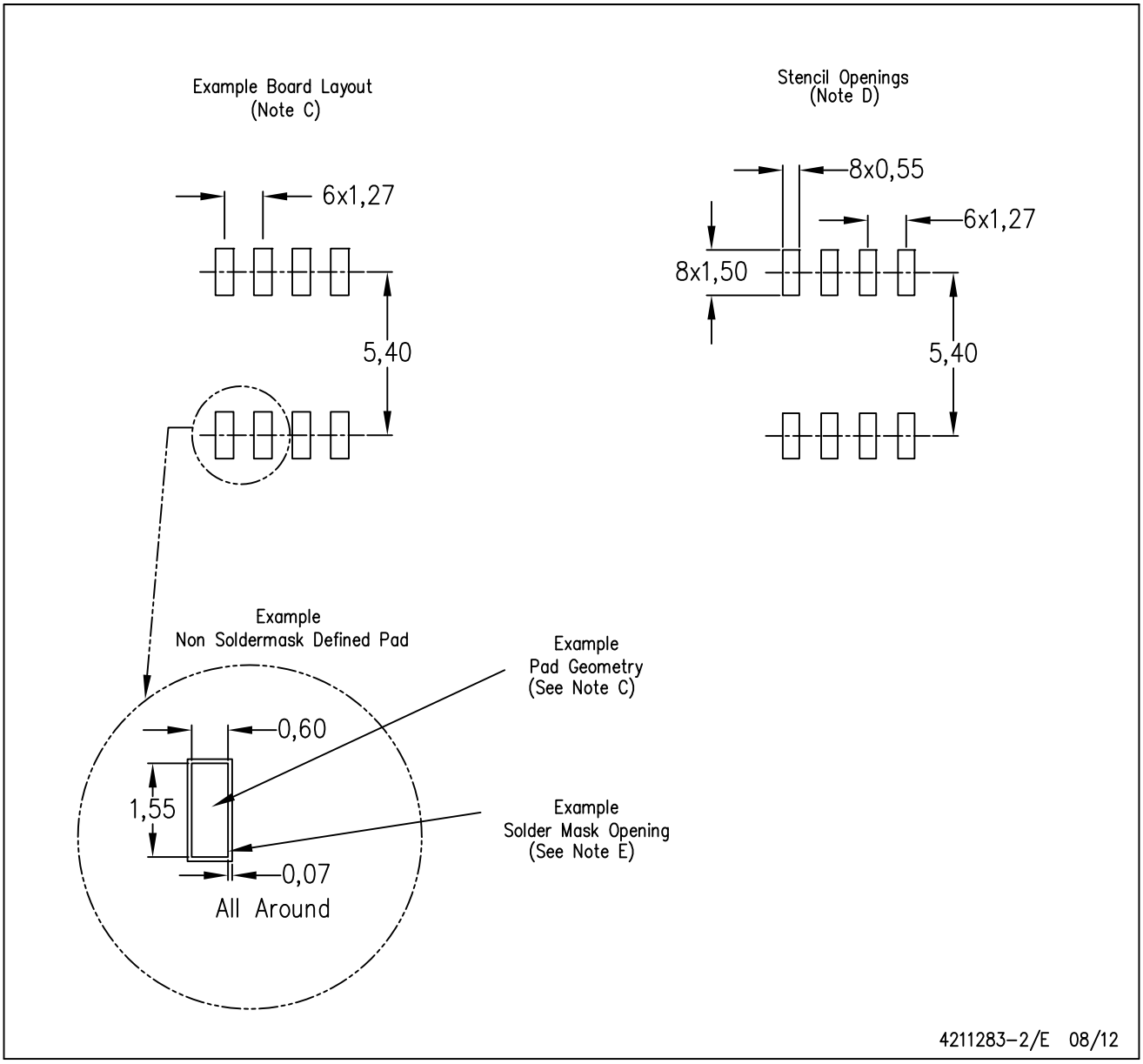

NOTES:
A. All linear dimensions are in millimeters.
B. This drawing is subject to change without notice.
C. Publication IPC–7351 is recommended for alternate designs.
D. Laser cutting apertures with trapezoidal walls and also rounding corners will offer better paste release. Customers should contact their board assembly site for stencil design recommendations. Refer to IPC–7525 for other stencil recommendations.
E. Customers should contact their board fabrication site for solder mask tolerances between and around signal pads.

IMPORTANT NOTICE

Texas Instruments Incorporated (TI) reserves the right to make corrections, enhancements, improvements and other changes to its semiconductor products and services per JESD46, latest issue, and to discontinue any product or service per JESD48, latest issue. Buyers should obtain the latest relevant information before placing orders and should verify that such information is current and complete.

TI's published terms of sale for semiconductor products (http://www.ti.com/sc/docs/stdterms.htm) apply to the sale of packaged integrated circuit products that TI has qualified and released to market. Additional terms may apply to the use or sale of other types of TI products and services.

Reproduction of significant portions of TI information in TI data sheets is permissible only if reproduction is without alteration and is accompanied by all associated warranties, conditions, limitations, and notices. TI is not responsible or liable for such reproduced documentation. Information of third parties may be subject to additional restrictions. Resale of TI products or services with statements different from or beyond the parameters stated by TI for that product or service voids all express and any implied warranties for the associated TI product or service and is an unfair and deceptive business practice. TI is not responsible or liable for any such statements.

Buyers and others who are developing systems that incorporate TI products (collectively, "Designers") understand and agree that Designers remain responsible for using their independent analysis, evaluation and judgment in designing their applications and that Designers have full and exclusive responsibility to assure the safety of Designers' applications and compliance of their applications (and of all TI products used in or for Designers' applications) with all applicable regulations, laws and other applicable requirements. Designer represents that, with respect to their applications, Designer has all the necessary expertise to create and implement safeguards that (1) anticipate dangerous consequences of failures, (2) monitor failures and their consequences, and (3) lessen the likelihood of failures that might cause harm and take appropriate actions. Designer agrees that prior to using or distributing any applications that include TI products, Designer will thoroughly test such applications and the functionality of such TI products as used in such applications.

TI's provision of technical, application or other design advice, quality characterization, reliability data or other services or information, including, but not limited to, reference designs and materials relating to evaluation modules, (collectively, "TI Resources") are intended to assist designers who are developing applications that incorporate TI products; by downloading, accessing or using TI Resources in any way, Designer (individually or, if Designer is acting on behalf of a company, Designer's company) agrees to use any particular TI Resource solely for this purpose and subject to the terms of this Notice.

TI's provision of TI Resources does not expand or otherwise alter TI's applicable published warranties or warranty disclaimers for TI products, and no additional obligations or liabilities arise from TI providing such TI Resources. TI reserves the right to make corrections, enhancements, improvements and other changes to its TI Resources. TI has not conducted any testing other than that specifically described in the published documentation for a particular TI Resource.

Designer is authorized to use, copy and modify any individual TI Resource only in connection with the development of applications that include the TI product(s) identified in such TI Resource. NO OTHER LICENSE, EXPRESS OR IMPLIED, BY ESTOPPEL OR OTHERWISE TO ANY OTHER TI INTELLECTUAL PROPERTY RIGHT, AND NO LICENSE TO ANY TECHNOLOGY OR INTELLECTUAL PROPERTY RIGHT OF TI OR ANY THIRD PARTY IS GRANTED HEREIN, including but not limited to any patent right, copyright, mask work right, or other intellectual property right relating to any combination, machine, or process in which TI products or services are used. Information regarding or referencing third-party products or services does not constitute a license to use such products or services, or a warranty or endorsement thereof. Use of TI Resources may require a license from a third party under the patents or other intellectual property of the third party, or a license from TI under the patents or other intellectual property of TI.

TI RESOURCES ARE PROVIDED "AS IS" AND WITH ALL FAULTS. TI DISCLAIMS ALL OTHER WARRANTIES OR REPRESENTATIONS, EXPRESS OR IMPLIED, REGARDING RESOURCES OR USE THEREOF, INCLUDING BUT NOT LIMITED TO ACCURACY OR COMPLETENESS, TITLE, ANY EPIDEMIC FAILURE WARRANTY AND ANY IMPLIED WARRANTIES OF MERCHANTABILITY, FITNESS FOR A PARTICULAR PURPOSE, AND NON-INFRINGEMENT OF ANY THIRD PARTY INTELLECTUAL PROPERTY RIGHTS. TI SHALL NOT BE LIABLE FOR AND SHALL NOT DEFEND OR INDEMNIFY DESIGNER AGAINST ANY CLAIM, INCLUDING BUT NOT LIMITED TO ANY INFRINGEMENT CLAIM THAT RELATES TO OR IS BASED ON ANY COMBINATION OF PRODUCTS EVEN IF DESCRIBED IN TI RESOURCES OR OTHERWISE. IN NO EVENT SHALL TI BE LIABLE FOR ANY ACTUAL, DIRECT, SPECIAL, COLLATERAL, INDIRECT, PUNITIVE, INCIDENTAL, CONSEQUENTIAL OR EXEMPLARY DAMAGES IN CONNECTION WITH OR ARISING OUT OF TI RESOURCES OR USE THEREOF, AND REGARDLESS OF WHETHER TI HAS BEEN ADVISED OF THE POSSIBILITY OF SUCH DAMAGES.

Unless TI has explicitly designated an individual product as meeting the requirements of a particular industry standard (e.g., ISO/TS 16949 and ISO 26262), TI is not responsible for any failure to meet such industry standard requirements.

Where TI specifically promotes products as facilitating functional safety or as compliant with industry functional safety standards, such products are intended to help enable customers to design and create their own applications that meet applicable functional safety standards and requirements. Using products in an application does not by itself establish any safety features in the application. Designers must ensure compliance with safety-related requirements and standards applicable to their applications. Designer may not use any TI products in life-critical medical equipment unless authorized officers of the parties have executed a special contract specifically governing such use. Life-critical medical equipment is medical equipment where failure of such equipment would cause serious bodily injury or death (e.g., life support, pacemakers, defibrillators, heart pumps, neurostimulators, and implantables). Such equipment includes, without limitation, all medical devices identified by the U.S. Food and Drug Administration as Class III devices and equivalent classifications outside the U.S.

TI may expressly designate certain products as completing a particular qualification (e.g., Q100, Military Grade, or Enhanced Product). Designers agree that it has the necessary expertise to select the product with the appropriate qualification designation for their applications and that proper product selection is at Designers' own risk. Designers are solely responsible for compliance with all legal and regulatory requirements in connection with such selection.

Designer will fully indemnify TI and its representatives against any damages, costs, losses, and/or liabilities arising out of Designer's non-compliance with the terms and provisions of this Notice.

Mailing Address: Texas Instruments, Post Office Box 655303, Dallas, Texas 75265
Copyright © 2017, Texas Instruments Incorporated