THIS DRAWING IS UNPUBLISHED
RELEASED FOR PUBLICATION MAR ,2006.
© COPYRIGHT 2009 By –
ALL RIGHTS RESERVED.

LOC	DIST
IR	—

REVISIONS

P	LTR	DESCRIPTION	DATE	DWN	APVD
	B	RELEASED AS PER ECR-09-017658	06AUG09	SRE	PCH
	B1	ECR-10-026537	21JAN11	KK	HMR

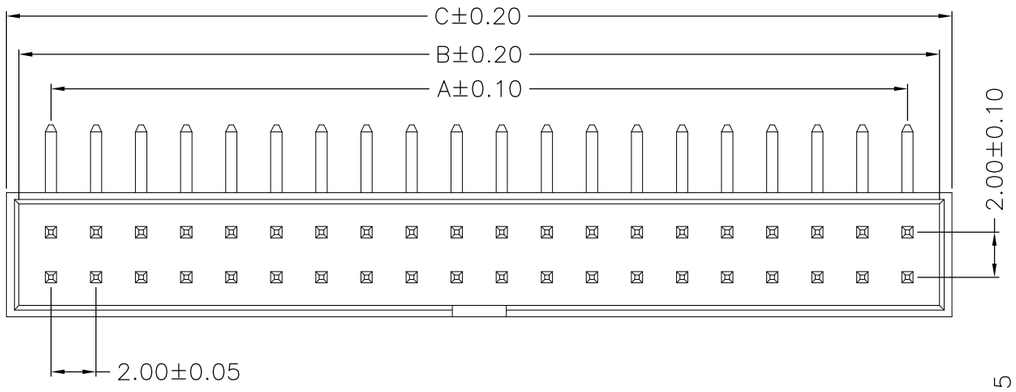

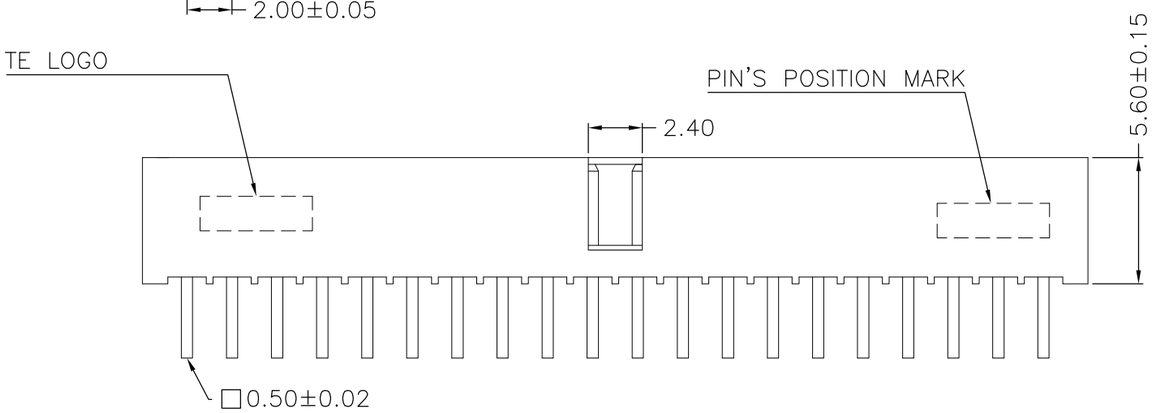

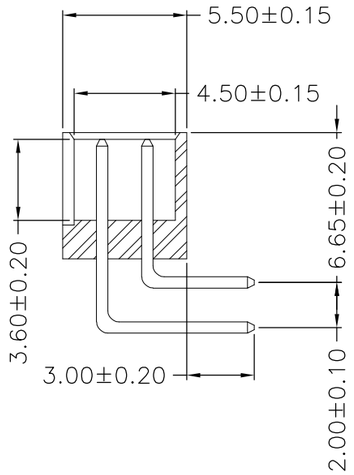

	POS.	A	B	C	PART NUMBER
		DIMENSIONS			
OBSOLETE	64	62.00	64.85	65.95	~~6-1734493-4~~
	62	60.00	62.85	63.95	~~6-1734493-2~~
	60	58.00	60.85	61.95	~~6-1734493-0~~
	58	56.00	58.85	59.95	~~5-1734493-8~~
	56	54.00	56.85	57.95	~~5-1734493-6~~
	54	52.00	54.85	55.95	~~5-1734493-4~~
OBSOLETE	52	50.00	52.85	53.95	~~5-1734493-2~~
	50	48.00	50.85	51.95	5-1734493-0
	48	46.00	48.85	49.95	4-1734493-8
	46	44.00	46.85	47.95	4-1734493-6
OBSOLETE	44	42.00	44.85	45.95	~~4-1734493-4~~
	42	40.00	42.85	43.95	4-1734493-2
	40	38.00	40.85	41.95	4-1734493-0
	38	36.00	38.85	39.95	3-1734493-8
	36	34.00	36.85	37.95	3-1734493-6
OBSOLETE	34	32.00	34.85	35.95	~~3-1734493-4~~
	32	30.00	32.85	33.95	3-1734493-2
	30	28.00	30.85	31.95	3-1734493-0
	28	26.00	28.85	29.95	2-1734493-8
OBSOLETE	26	24.00	26.85	27.95	~~2-1734493-6~~
	24	22.00	24.85	25.95	2-1734493-4
	22	20.00	22.85	23.95	2-1734493-2
	20	18.00	20.85	21.95	2-1734493-0
OBSOLETE	18	16.00	18.85	19.95	~~1-1734493-8~~
	16	14.00	16.85	17.95	1-1734493-6
	14	12.00	14.85	15.95	1-1734493-4
	12	10.00	12.85	13.95	1-1734493-2
OBSOLETE	10	8.00	10.85	11.95	~~1-1734493-0~~
	8	6.00	8.85	9.95	0-1734493-8
	6	4.00	6.85	7.95	0-1734493-6
	4	2.00	4.85	5.95	0-1734493-4

NOTE:

1. MATERIAL :
   HOUSING : NYLON 6T, UL94V-0, BLACK COLOUR.
   CONTACT : BRASS, THICKNESS=0.5mm
2. FINISH:
   CONTACT: 10μ" MIN. GOLD PLATED ON CONTACT AREA,
   100μ" MIN. MATTE TIN PLATED ON SOLDERTAILS,
   50μ" MIN. NICKEL UNDERPLATED OVERALL
3. WAVE SOLDER CAPABLE TO 265°C PER TE SPEC 109-202, CONDITION B
4. QUALIFICATION TEST REPORT: 501-57197

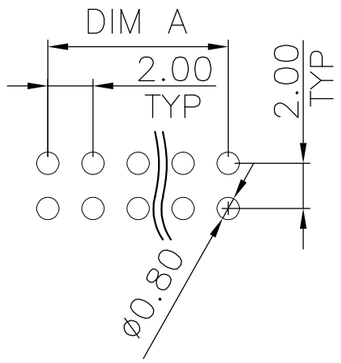

RECOMMENDED PCB LAYOUT (THICKNESS: 1.6mm)

(TOP VIEW) (TOLERANCE: ±0.05)

THIS DRAWING IS A CONTROLLED DOCUMENT.

DIMENSIONS: mm

TOLERANCES UNLESS OTHERWISE SPECIFIED:

0 PLC	± –
1 PLC	± 0.20
2 PLC	± 0.15
3 PLC	± 0.10
4 PLC	± –
ANGLES	± –

MATERIAL 1

FINISH 2

DWN	O.HU	28-MAR-2006
CHK	S.HOU	28-MAR-2006
APVD	W.J.KE	28-MAR-2006
PRODUCT SPEC	108-57197	
APPLICATION SPEC	—	
WEIGHT	—	

TE Connectivity

NAME: AMPMODU 2.0mm PITCH, RIGHT ANGLE,DUAL ROW, THRU-HOLE

SIZE	CAGE CODE	DRAWING NO	RESTRICTED TO
A3	–	C-1734493	—

CUSTOMER DRAWING

SCALE	SHEET	REV
1:1	1 OF 2	B1

THIS DRAWING IS UNPUBLISHED. RELEASED FOR PUBLICATION MAR ,2006.
© COPYRIGHT 2009 By – ALL RIGHTS RESERVED.

LOC	DIST
IR	–

REVISIONS

P	LTR	DESCRIPTION	DATE	DWN	APVD
	–	SEE SHEET 1			

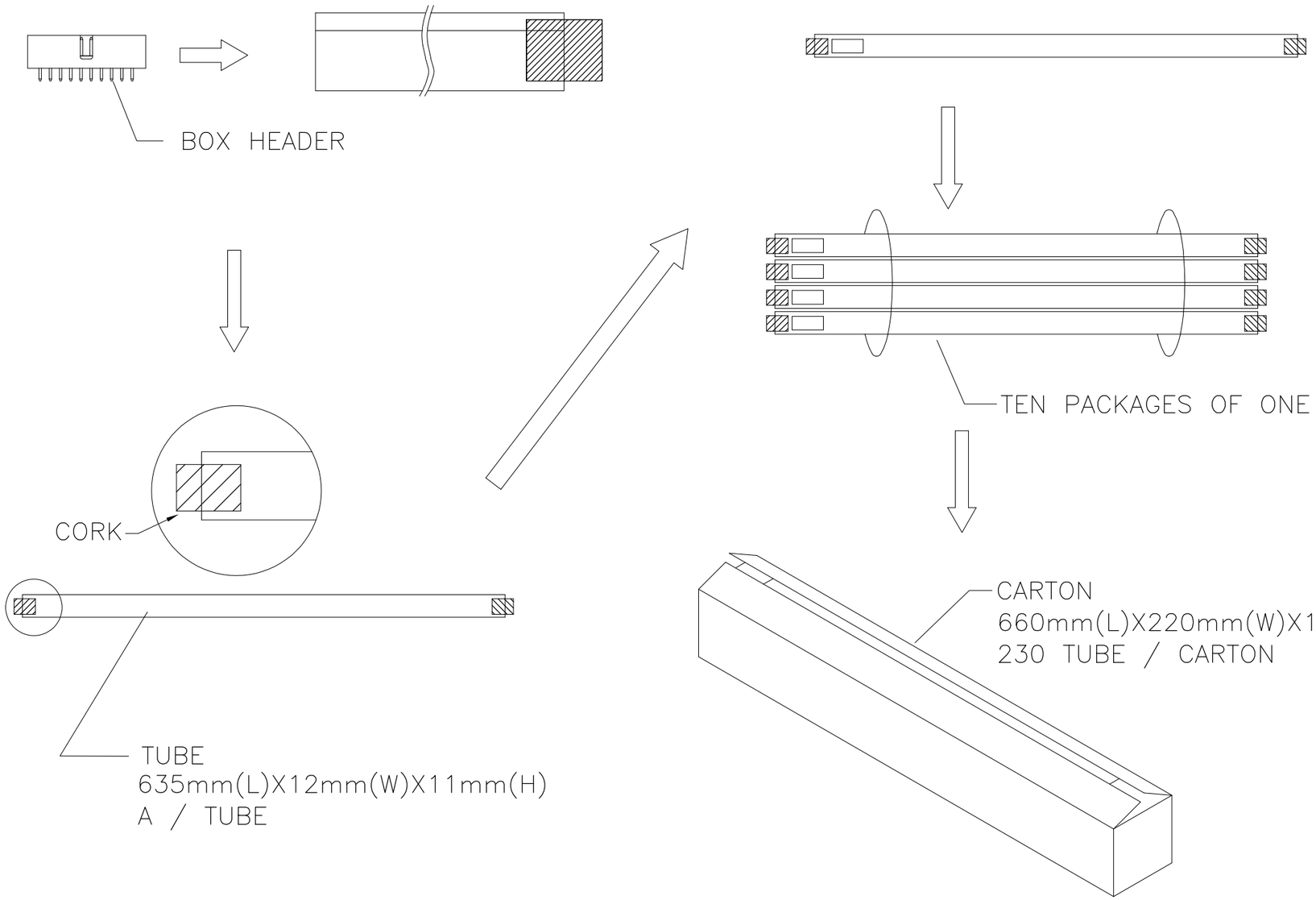

	PCS/ CARTON	PCS/ TUBE	POS.	PART NUMBER
OBSOLETE	~~2,070~~	~~9~~	~~64~~	~~6-1734493-4~~
	~~2.070~~	~~9~~	~~62~~	~~6-1734493-2~~
	~~2,070~~	~~9~~	~~60~~	~~6-1734493-0~~
	~~2,300~~	~~10~~	~~58~~	~~5-1734493-8~~
	~~2,300~~	~~10~~	~~56~~	~~5-1734493-6~~
	~~2,300~~	~~10~~	~~54~~	~~5-1734493-4~~
OBSOLETE	~~2,530~~	~~11~~	~~52~~	~~5-1734493-2~~
	2,530	11	50	5-1734493-0
	2,760	12	48	4-1734493-8
	2,760	12	46	4-1734493-6
OBSOLETE	2,990	13	44	~~4-1734493-4~~
	2,990	13	42	4-1734493-2
	3,220	14	40	4-1734493-0
	3,450	15	38	3-1734493-8
	3,450	15	36	3-1734493-6
OBSOLETE	3,680	16	34	~~3-1734493-4~~
	3,910	17	32	3-1734493-2
	4,140	18	30	3-1734493-0
	4,600	20	28	2-1734493-8
OBSOLETE	4,830	21	26	~~2-1734493-6~~
	5,290	23	24	2-1734493-4
	5,750	25	22	2-1734493-2
	6,210	27	20	2-1734493-0
OBSOLETE	6,900	30	18	~~1-1734493-8~~
	7,590	33	16	1-1734493-6
	8,510	37	14	1-1734493-4
	9,660	42	12	1-1734493-2
OBSOLETE	11,500	50	10	~~1-1734493-0~~
	13,800	60	8	0-1734493-8
	17,250	75	6	0-1734493-6
	23,000	100	4	0-1734493-4

THIS DRAWING IS A CONTROLLED DOCUMENT.

DIMENSIONS: mm

TOLERANCES UNLESS OTHERWISE SPECIFIED:

0 PLC	± –
1 PLC	± 0.20
2 PLC	± 0.15
3 PLC	± 0.10
4 PLC	± –
ANGLES	± –

MATERIAL: SEE SHEET 1

FINISH: SEE SHEET 1

DWN	O.HU	28-MAR-2006
CHK	S.HOU	28-MAR-2006
APVD	W.J.KE	28-MAR-2006

PRODUCT SPEC: 108-57197

APPLICATION SPEC: –

WEIGHT: –

CUSTOMER DRAWING

TE Connectivity

NAME: AMPMODU 2.0mm PITCH, RIGHT ANGLE,DUAL ROW, THRU-HOLE

SIZE	CAGE CODE	DRAWING NO	RESTRICTED TO
A3	–	C-1734493	–

SCALE	SHEET	REV
1:1	2 OF 2	B1