THIS DRAWING IS UNPUBLISHED. RELEASED FOR PUBLICATION -,- .
© COPYRIGHT - By - ALL RIGHTS RESERVED.

LOC	DIST
AF	50

REVISIONS

P	LTR	DESCRIPTION	DATE	DWN	APVD
	H	REVISED PER ECR-12-013518	23NOV2012	KH	PD

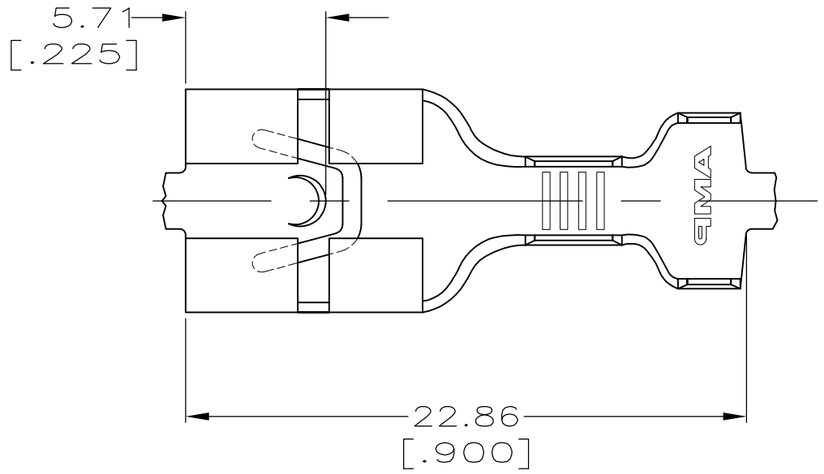

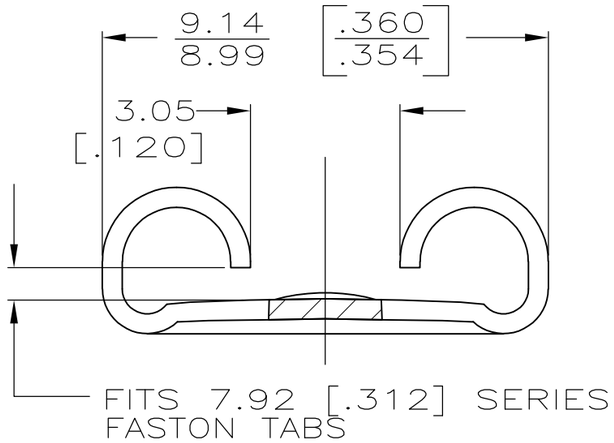

VIEW A–A
SCALE 8:1

1 CONTINUOUS STRIP ON REELS.

2 MATING TAB THK TO BE 0.81±0.025 [.032±.001].

3 WIRE SIZE IS [#16–#12] AWG.

4 INSULATION RANGE IS 4.06 OR (2) 3.30 [.160 OR (2) .130].

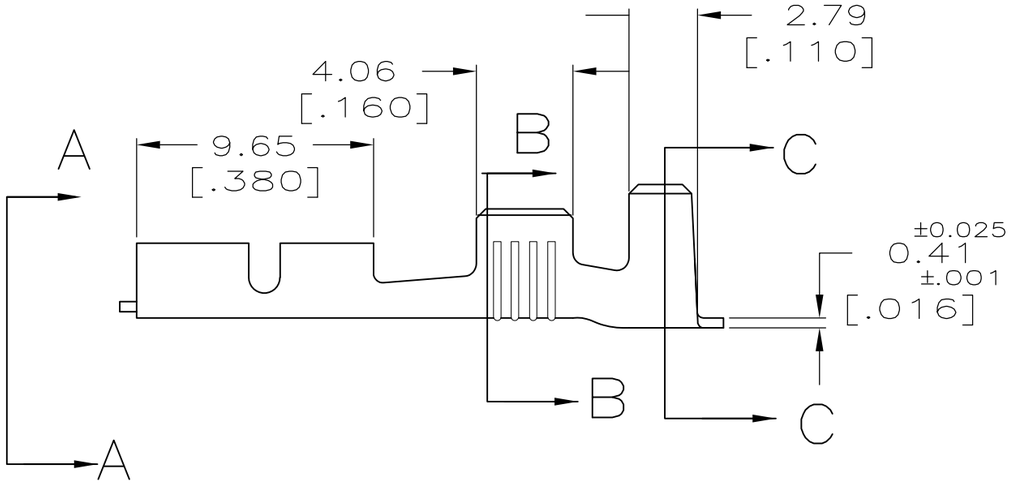

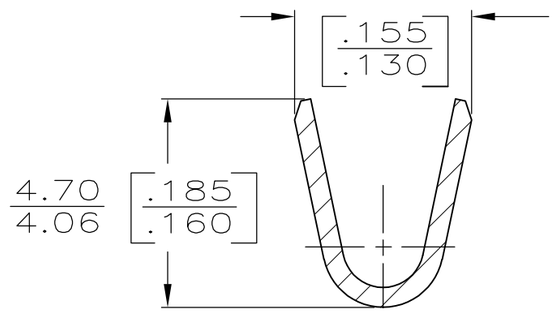

SECTION B–B
SCALE 8:1

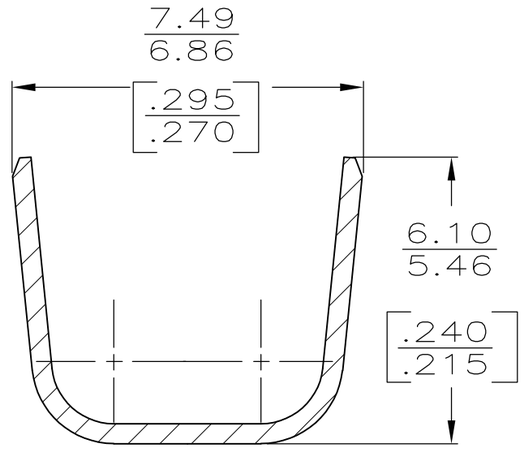

SECTION C–C
SCALE 8:1

–	63677–2
TIN	63677–1
FINISH	PART NO

TYPE	WIDTH	STRIP LENGTH ±0.38 ±[.015]	TYPE	WIDTH	HEIGHT	WIRE
F	6.35 [.250]	5.59 [.220]	F	3.05 [.120]	1.75 [.069]	1.3 mm² [16]
					1.96 [.077]	2.0 mm² [14]
					2.29 [.090]	3.0 mm² [12]
					1.96 [.077]	1.3 + 0.8mm² [16 + 18]
					2.11 [.083]	TWO 1.3mm² [TWO #16'S]
					1.85 [.073]	TWO 0.8mm² [TWO #18'S]
INSUL BARREL CRIMP		WIRE BARREL CRIMP			±.051 [±.002]	

THIS DRAWING IS A CONTROLLED DOCUMENT.

DIMENSIONS: mm [INCHES]

TOLERANCES UNLESS OTHERWISE SPECIFIED:

0 PLC	± –
1 PLC	± –
2 PLC	± 0.25 [.010]
3 PLC	± –
4 PLC	± –
ANGLES	± –

MATERIAL: BRASS

FINISH: SEE TABLE

DWN	JR RUTH	9/29/92
CHK	MS FEHER	9/29/92
APVD	C MEYERS	9/29/92
PRODUCT SPEC	—	
APPLICATION SPEC	114–2036	
WEIGHT	—	

TE Connectivity

NAME: RECEPTACLE, FASTON, 7.92 [.312] SERIES

SIZE	CAGE CODE	DRAWING NO	RESTRICTED TO
A3	00779	C-63677	—

CUSTOMER DRAWING

SCALE 4:1 | SHEET 1 OF 1 | REV H