Issue No. : **EA-04-11-05-03S**
Date of Issue : **05th. November, 2004**
Classification : ■New ☐Changed ☐Revised

# PRODUCT SPECIFICATION

| | | |
|---|---|---|
| Product Description | : | Aluminium Electrolytic Capacitor |
| Product Part Number | : | **A TYPE M SERIES** |
| Country of Origin | : | Malaysia / Japan |
| Marking of the Origin | : | Printed on the packaging label |
| Classification of Spec. | : | Product specification |
| Applications | : | **Set Top Box** |
| | | For other application, contact our person signed below. |
| Term of Validity | : | **04th. November, 2009 from the date of issue** |

| **CUSTOMER USE ONLY** | Receipt Record # : |
|---|---|
| This was certainly received by us.<br>One copy is being returned to the manufacturer within 2 months from the date of issue. If not, it shall be considered as accepted. | Date of Receipt |
| | Received by : |

- This capacitor is designed to be used for electronics circuits of, such as, audio/visual equipment, home appliances, computers and other office equipment, optical equipment, measuring equipment and industrial robots.
- No Ozone Depleting Chemicals (ODC's), controlled under the Montreal Protocol Agreement, are used in producing this product.
- This product does not contain PBBOs or PBBs.
- All the materials that are used for this product are registered as "Known Chemicals" in the Japanese act "Law Concerning the Examination and Regulation of Manufacture, etc. of Chemical Substances".
- This product is not subject to the control under Foreign Exchange and Foreign Trade Control Law of Japan as one of the strategic products.

Matsushita Electronic Devices (M) Sdn. Bhd.
No.1 Jalan Jemuju 16/13, 40000 Shah Alam,
Selangor Darul Ehsan, MALAYSIA.
(P.O. Box 7720, Pejabat Pos Besar Shah Alam,
40724 Shah Alam, Selangor Darul Ehsan.)

| Prepared by: Customer Engineering, R&D Center | | |
|---|---|---|
| Approved | Checked | Prepared |
| **YAMADA** | **S.C.LEE** | **H.L.LEE** |

Contents

- Scope Page 1
- Part number Page 1
- Can size Page 2 ~ 3
- Standard rating Page 4
- Dimensions and appearance Page 4
- Constructions Page 5
- Performance characteristics Page 6 ~ 9
- Marking Page 10
- Other specifications Page 10
- Part number list Page 11 ~ 15
- Dimensions (Snap-in lead formed type) Page 16
- Taping shape and dimensions Page 17 ~ 20
- Taping specification Page 21 ~ 24
- Application guidelines Page 25 ~ 28

Remark

## 1.0 Scope

This specification applies to Aluminium Electrolyte Capacitors for electronic equipment use which conform to JIS C 5141.

## 2.0 Part number

| EC | A | ○○ | M | ○○○ | □□ |
|---|---|---|---|---|---|
| 2-1 | 2-2 | 2-3 | 2-4 | 2-5 | 2-6 |

2-1 Aluminium Electrolytic Capacitor

2-2 Type : Radial lead type (JIS:04 type)

2-3 Rated voltage code

| Voltage code | 0J | 1A | 1C | 1E | 1V | 1H | 1J | 2A |
|---|---|---|---|---|---|---|---|---|
| Rated voltage | 6.3 | 10 | 16 | 25 | 35 | 50 | 63 | 100 |

| Voltage code | 2C | 2D | 2E | 2V | 2G | 2W |
|---|---|---|---|---|---|---|
| Rated voltage | 160 | 200 | 250 | 350 | 400 | 450 |

2-4 M series

2-5 Capacitance code : Capacitance value in μF is indicated by 3 figures.
The first two figures denote the first two figures of the capacitance value.
The third figure denotes the number of subsequent zeros of the capacitance value.
"R" denotes the decimal point.
Ex : 0.1μF → 0R1, 10μF → 100, 1000μF → 102

2-6 Suffix code for appearance

| | |
|---|---|
| Blank | Standard long lead |
| E | Snap-in lead |
| I | Lead taping (2.5mm pitch) |
| B | Lead taping (5.0mm / 7.5mm pitch) |

Refer to page 16 for snap-in lead dimensions, page 17 ~ 20 for lead taping dimensions, and page 21 ~ 24 for lead taping specifications.

Remark

Can size

ΦD x L [mm]

| W.V. (V. DC) / Cap (μF) | 6.3 | 10 | 16 | 25 | 35 | 50 | 63 | 100 |
|---|---|---|---|---|---|---|---|---|
| 0.1 | | | | | | 5x11 | | |
| 0.22 | | | | | | 5x11 | | |
| 0.33 | | | | | | 5x11 | | |
| 0.47 | | | | | | 5x11 | | 5x11 |
| 0.68 | | | | | | 5x11 | | |
| 1 | | | | | | 5x11 | 5x11 | 5x11 |
| 2.2 | | | | | | 5x11 | 5x11 | 5x11 |
| 3.3 | | | | | | 5x11 | | 5x11 |
| 4.7 | | | | | | 5x11 | 5x11 | 5x11 |
| 6.8 | | | | | | 5x11 | | |
| 10 | | | 5x11 | 5x11 | 5x11 | 5x11 | 5x11 | 5x11 |
| 22 | | | 5x11 | 5x11 | 5x11 | 5x11 | 5x11 | 6.3x11.2 |
| 33 | 5x11 | | 5x11 | 5x11 | 5x11 | 5x11 | 6.3x11.2 | 8x11.5 |
| 47 | 5x11 | | 5x11 | 5x11 | 5x11 | 6.3x11.2 | 6.3x11.2 | 8x11.5 |
| 68 | | | 5x11 | | | | | |
| 100 | 5x11 | 5x11 | 5x11 | 6.3x11.2 | 6.3x11.2 | 8x11.5 | 8x11.5<br>10x12.5 S | 10x16 |
| 220 | 5x11 | 6.3x11.2<br>5x11 U | 6.3x11.2 | 8x11.5 | 8x11.5 | 10x12.5 | 10x16 | 12.5x20 |
| 330 | 6.3x11.2 | 6.3x11.2 | 8x11.5 | 8x11.5 | 10x12.5 | 10x16 | 10x20 | 12.5x25 |
| 470 | 6.3x11.2 | 8x11.5<br>6.3x11.2 U | 8x11.5 | 10x12.5 | 10x16 | 10x20 | 12.5x20 | 16x25 |
| 1000 | 8x11.5 | 10x12.5 | 10x16<br>8x20 L<br>10x12 U | 10x20<br>10x16 U | 12.5x20<br>10x20 U | 12.5x25 | 16x25 | 18x35.5 |
| 2200 | 10x16 | 10x20<br>10x16 U | 12.5x20 | 12.5x25 | 16x25 | 16x31.5 | 18x35.5 | |
| 3300 | 10x20 | 12.5x20 | 12.5x25 | 16x25 | 16x31.5 | 18x35.5 | | |
| 3900 | | | 16x20 U | 16x25 | | | | |
| 4700 | 12.5x20 | 12.5x25 | 16x25 | 16x31.5<br>18x25 S | 18x35.5 | | | |
| 5600 | | | | | 18x35.5 | | | |
| 6800 | 12.5x25 | 16x25 | 16x31.5 | 18x35.5 | | | | |
| 8200 | | | | 18x35.5 | | | | |
| 10000 | 16x25 | 16x31.5 | 18x35.5 | | | | | |
| 15000 | 16x31.5 | 18x35.5 | | | | | | |
| 22000 | 18x35.5 | | | | | | | |

Remark

160V ~ 450V ΦD x L [mm]

| W.V. (V. DC) / Cap (μF) | 160 | 200 | 250 | 350 | 400 | 450 |
|---|---|---|---|---|---|---|
| 0.47 | 5x11 | | 5x11 | | | |
| 1 | 6.3x11.2 | 6.3x11.2 | 6.3x11.2 | 6.3x11.2 | 6.3x11.2 | 8x11.5 |
| 2.2 | 6.3x11.2 | 6.3x11.2 | 6.3x11.2 | 8x11.5 | 8x11.5 | 10x12.5 |
| 3.3 | 6.3x11.2 | 6.3x11.2 | 8x11.5 | 8x11.5 | 10x12.5 | 10x16 |
| 4.7 | 6.3x11.2 | 8x11.5 | 8x11.5 | 10x12.5 | 10x16 | 10x20 |
| 6.8 | 8x11.5 | | | | 10x16 | |
| 10 | 10x12.5 | 10x12.5 | 10x16 | 10x20 | 10x20 | 12.5x20 |
| 22 | 10x16 | 10x20<br>10x16 U | 10x20 | 12.5x20 | 12.5x25 | 16x25 |
| 33 | 10x20 | 10x20 | 12.5x20 | 16x25 | 16x25 | 16x31.5 |
| 47 | 12.5x20 | 12.5x20 | 12.5x25 | 16x25 | 16x31.5 | |
| 68 | | | | | 16x31.5 U | |
| 82 | | 16x25 | | | 18x35.5 | |
| 100 | 12.5x25 | 16x25<br>18x20 S | 16x31.5 | | 18x40 | |
| 150 | | 16x31.5 | | | | |
| 220 | 16x31.5 | 16x31.5 U | 18x40 | | | |
| 330 | | 18x40<br>18 x 35.5 U | | | | |
| 470 | 18x40 | | | | | |

Remark

## 3.0 Standard ratings

| No | Item | | Ratings | | | | | | | |
|---|---|---|---|---|---|---|---|---|---|---|
| 1 | Operating temperature range | | -40 ~ +85 °C | | | | -25 ~ +85 °C | | | |
| 2 | Rated working voltage range | | 6.3 ~ 100 V D.C. | | | | 160 ~ 450 V D.C. | | | |
| 3 | Nominal capacitance range | | 0.1 ~ 22000 μF (120Hz 20°C) | | | | 0.47 ~ 470 μF (120Hz 20°C) | | | |
| 4 | Capacitance tolerance | | ± 20 % (120Hz 20°C) | | | | | | | |
| 5 | Surge voltage (V D.C.) | W.V | 6.3 | 10 | 16 | 25 | 35 | 50 | 63 | 100 |
| | | S.V | 8 | 13 | 20 | 32 | 44 | 63 | 79 | 125 |
| | | W.V | 160 | 200 | 250 | 350 | 400 | 450 | | |
| | | S.V | 200 | 250 | 300 | 400 | 450 | 500 | | |
| 6 | Permissible ripple current | | Page 11 ~ 15 | | | | | | | |

## 4.0 Dimension and appearance

- Vinyl sleeve colour (dark blue), product marking (white)
- Standard long lead (Suffix : blank) :-

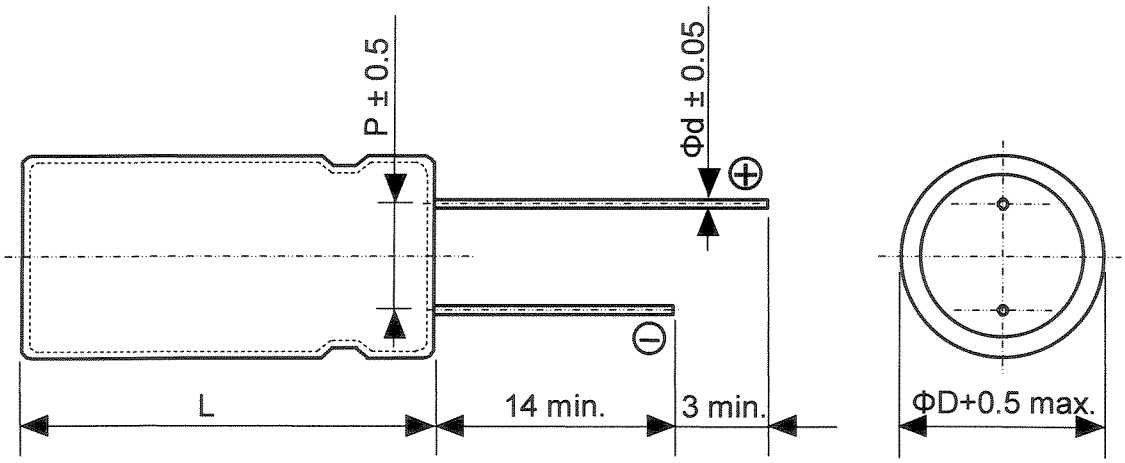


L ≤ 16 : L + 1.0 max.

L ≥ 20 : L + 2.0 max. [unit : mm]

| Body diameter, ΦD | 5 | 6.3 | 8 | 10 | 12.5 | 16 | 18 |
|---|---|---|---|---|---|---|---|
| Lead pitch, P | 2.0 | 2.5 | 3.5 | 5.0 | 5.0 | 7.5 | 7.5 |
| Lead diameter, Φd | 0.5 | 0.5 | 0.6 | 0.6 | 0.6 | 0.8 | 0.8 |

Remark

## 5.0 Constructions

5-1 Inside construction :-

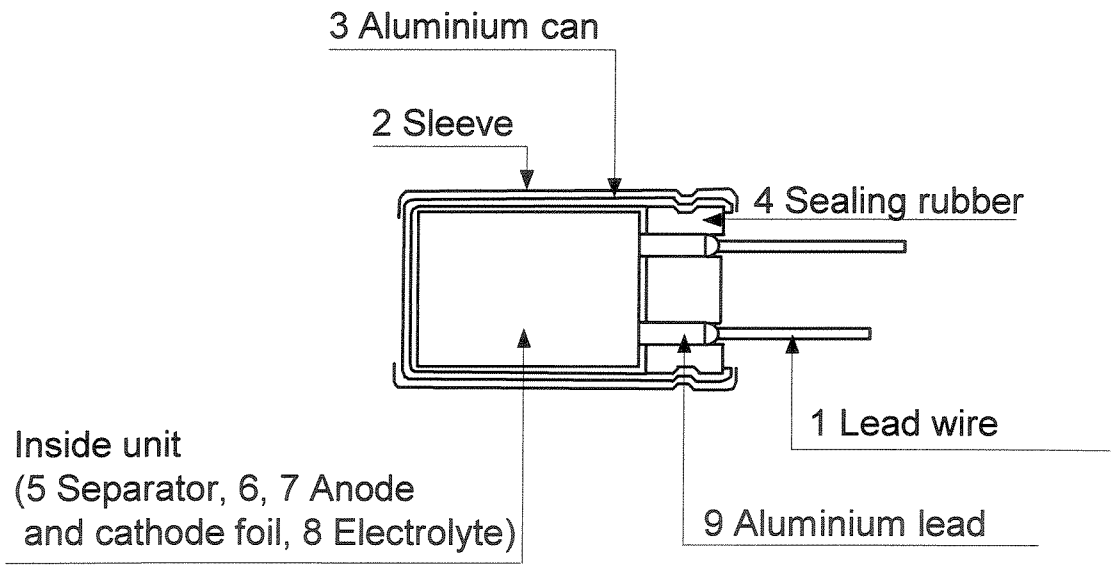


5-2 Construction parts :-

| No. | Parts | Materials | | Parts | Materials |
|---|---|---|---|---|---|
| 1 | Lead wire | Solid tinned copper welded steel wire | 5 | Separator | Manila hemp / Kraft paper |
| | | | 6 | Anode foil | High purity aluminium foil |
| 2 | Sleeve | Polyethylene terephthalate | 7 | Cathode foil | Aluminium foil |
| 3 | Aluminium can | Aluminium | 8 | Electrolyte | Ethylene Glycol |
| 4 | Rubber packing | Synthetic rubber | 9 | Aluminium lead wire | Aluminium |

Remark

## 6.0 Performance Characteristics

| No | Item | Performance Characteristics | Test |
|---|---|---|---|
| 1 | Leakage current | 6.3V~100V : I ≤ 0.01CV or 3μA whichever is greater.<br>160V~450V : I ≤ 0.06CV+10μA<br>I : Leakage current C : Capacitance<br>V : Rated voltage | Series resistor : 1000 ± 10 Ω<br>Applied voltage : Rated working voltage<br>Measuring : After 2 minutes |
| 2 | Capacitance | Within the specified capacitance tolerance | Measuring frequency : 120 Hz ± 20%<br>Measuring circuit : Equivalent series circuit<br>Measuring voltage : +1.5~2 V D.C.<br>(≤ 0.5V for A.C.) |
| 3 | tan δ | Less than the values in Table 1 of Page 10<br><br>Add 0.02 per 1000μF for products which capacitance value is above 1000μF. | Measuring frequency : 120 Hz ± 20%<br>Measuring circuit : Equivalent series circuit<br>Measuring voltage : +1.5~2 V D.C.<br>(≤ 0.5V for A.C.) |
| 4 | Temperature characteristics | Step 2: Impedance ratio : Less than values in Table 2 of Page 10.<br>Step 4: Leakage current : ≤ 500% of value of Item 6.1<br>Capacitance change : Within ±25% of value in Step 1<br>tan δ ≤ the value of Item 6.3 | Step / Test temperature / Time:<br>1: 20 ± 2°C, -<br>2: ■, -*<br>3: 20 ± 2°C, 15 minutes<br>4: 85 ± 2°C, 2 hours<br>5: 20 ± 2°C, -*<br>Impedance shall be measured at frequency of 120 Hz ± 10%<br>■ 6.3V ~ 100V : -25 ± 3 °C, -40 ± 3 °C<br>160V ~ 450V : -25 ± 3 °C<br>* The capacitor should be stored at the impedance or capacitance are stabilized. |
| 5 | Surge voltage | Leakage current : ≤ the value of Item 6.1<br>Capacitance change : Within ±15% of initial measured value<br>tan δ ≤ the value of Item 6.3<br>Appearance : No significant change can be observed. | Test temperature : 15 ~ 35°C<br>Series resistor : R = 100 ± 50 / C<br>R : protective resistor (kΩ)<br>C : nominal capacitance (μF)<br>Test voltage : Item 3.5<br>No. of cycles : 1000 cycles<br>Each cycle lasts for 6 ± 0.5 min.<br>"ON" for 30 ± 5 s<br>"OFF" for 5 ± 0.5 min. |

Remark

| No | Item | Performance Characteristics | Test |
|---|---|---|---|
| 6 | Lead terminal | There is no damage or breakage after test | <u>Lead pull strength</u><br>Diameter [mm] / Pull strength [N]<br>Φ0.50 / 5<br>Φ0.60 ~ Φ0.80 / 10<br>Pull strength is applied axially for 10 ± 1 seconds.<br><br><u>Lead bending strength</u><br>Diameter [mm] / Static load [N]<br>Φ0.50 / 2.5<br>Φ0.60 ~ Φ0.80 / 5.0<br>The capacitor is placed in a vertical position. The weight specified in the above table is applied to one lead. The capacitor is slowly rotated 90° to horizontal position and then return to vertical position. The bendings shall last for 2~3 seconds. Additional bends shall be made in the opposite direction. |
| 7 | Resistance to vibration | Capacitance :<br>During the test, measured value shall be stabilized.<br>(Measure several times within 30 mins before completion of test. The value shall be monitored from and to both ends of the frequency values.<br>Appearance :<br>No significant change can be observed.<br>Capacitance change :<br>Within ±5% of initial value. | Frequency : 10~55 Hz<br>(1 minute per cycle)<br>Vibration distance : 1.5 mm<br>Direction and duration of vibration :<br>It is done in the X,Y,Z axis direction for 2 hours each, with a total of 6 hours.<br>Mounting methods :<br>The capacitor shall be fixed with its lead wires at the point of 4mm from the bottom of capacitor body. Capacitor greater than 12.5mm diameter or longer than 25mm must be fixed in place with a bracket. |
| 8 | Solderability | More than 3/4 of the terminal surface shall be covered with new solder. | Solder : H60A, H60S, or H63A<br>Solder temperature : 235 ± 5°C<br>Immersing time : 2 ± 0.5 s<br>Immersing depth : 1.5 ~ 2.0 mm<br>Flux : Approx. 25% resin (JIS K5902) in ETHANOL (JIS K1501) |
| 9 | Resistance to soldering heat | Leakage current :<br>≤ the value of Item 6.1<br>Capacitance change :<br>Within ± 10% of initial measured value<br>tan δ :<br>≤ the value of Item 6.3<br>Appearance :<br>No significant change can be observed. | Solder : H60A, H60S, or H63A<br>Solder temperature : 260 ± 5°C<br>Immersing time : 10 ± 1 s<br>Immersing depth : 1.5~2.0 mm |

Remark

| No | Item | Performance Characteristics | Test |
|---|---|---|---|
| 10 | Permanency of marking | There shall be no damage and legible marked. Marking shall be deciphered easily. | Class of reagent : ISOPROPYL ALCOHOL (JIS K8034) or superior<br>Test temperature : 20 ~ 25°C<br>Immersing time : 30 ± 5 s |
| 11 | Vent<br>( for products with diameter ≥ Φ 6.3 ) | Vent shall operate without any hazardous expulsion or emission of flame. No emission of gas after 30 minutes application of voltage. | • AC current method :<br> 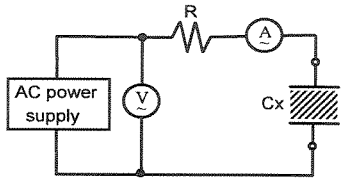 <br><br>50Hz or 60Hz<br>A : AC ammeter R : Series resistor<br>V : AC voltmeter Cx : Tested capacitor<br>Applied voltage :<br>AC voltage equals to rated W.V. x 0.7 or 250V (rms) whichever is smaller. |

| Nominal cap. (μF) | DC resistance (Ω) |
|---|---|
| ≤ 1 | 1000 ± 100 |
| > 1 ≤ 10 | 100 ± 10 |
| > 10 ≤ 100 | 10 ± 1 |
| > 100 ≤ 1000 | 1 ± 0.1 |
| > 1000 ≤ 10000 | 0.1 ± 0.01 |
| > 10000 | * |

* When nominal capacitance is over 1000μF, the value of series resistor is half impedance of tested capacitor.

• Reverse voltage method :

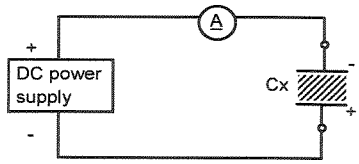


A : DC ammeter Cx : Tested capacitor

| Diameter (mm) | DC (A) |
|---|---|
| ≤ 22.4 | 1 (constant) |
| > 22.4 | 10 (constant) |

Remark

| No | Item | Performance Characteristics | Test |
|---|---|---|---|
| 12 | Moisture Resistance (Steady State) | Leakage current :<br>≤ the value of Item 6.1<br>Capacitance change :<br>Within ± 20% of initial measured value<br>tan δ<br>≤ 120% the value of Item 6.3<br>Appearance :<br>No significant change can be observed. | Test temperature : 40 ± 2°C<br>Relative humidity : 90 ~ 95%<br>Test duration : 240 ± 8 hours<br><br>After subjected to the test, the capacitor shall be left for 2 hours at room temperature and room humidity before measurement is performed. |
| 13 | Endurance | Leakage current :<br>≤ the value of Item 6.1<br>Capacitance change :<br>Within ± 20% of initial measured value<br>tan δ<br>≤ 150% the value of Item 6.3<br>Appearance :<br>No significant change can be observed. | Test temperature : 85 ± 2°C<br>Test duration : $2000^{+72}_{-0}$ hours<br>Applied voltage : D.C. voltage with specified ripple current.<br>The sum of DC and ripple peak current shall not exceed the rated working voltage. After subjected to the test, the capacitor shall be left at room temperature and room humidity for 2 hours before measurement is performed. |
| 14 | Shelf life | Leakage current :<br>≤ the value of Item 6.1<br>Capacitance change :<br>Within ± 20% of initial measured value<br>tan δ<br>≤ 150% the value of Item 6.3<br>Appearance :<br>No significant change can be observed. | Test temperature : 85 ± 2°C<br>Test duration : $1000^{+48}_{-0}$ hours<br><br>After subjected to the test, DC working voltage shall be applied to the capacitor for 30 minutes as post-test treatment. The capacitor shall be left at room temperature and room humidity for 2 hours before measurement is performed. |

Remark

## 7.0 Marking

Marking indicated on the products :

a) Rated working voltage
b) Nominal capacitance
c) Negative polarity
d) Manufacturer's identification
e) Maximum operating temperature
f) Series Code
g) Lot no. (or date code)

## 8.0 Others

Unless specified otherwise, the product shall conform to JIS C 5141.

■ Table 1 tan δ

| W.V. (V D.C.) | 6.3 | 10 | 16 | 25 | 35 | 50 | 63 | 100 |
|---|---|---|---|---|---|---|---|---|
| tan δ | 0.28 | 0.24 | 0.20 | 0.16 | 0.14 | 0.12 | 0.11 | 0.10 |

| W.V. (V D.C.) | 160 | 200 | 250 | 350 | 400 | 450 |
|---|---|---|---|---|---|---|
| tan δ | 0.16 | 0.18 | 0.18 | 0.20 | 0.20 | 0.20 |

Add 0.02 per 1000μF for product with capacitance value greater than 1000μF

■ Table 2 Temperature characteristics (Impedance ratio at 120Hz)

| W.V. (V D.C.) | 6.3 | 10 | 16 | 25 | 35 | 50 | 63 | 100 |
|---|---|---|---|---|---|---|---|---|
| Z(-25°C)/Z(20°C) | 5 | 4 | 3 | 2 | 2 | 2 | 2 | 2 |
| Z(-40°C)/Z(20°C) | 12 | 10 | 8 | 5 | 4 | 3 | 3 | 3 |

1. Add 0.5 per 1000μF for products more than 1000μF at -25°C
2. Add 1.0 per 1000μF for products more than 1000μF at -40°C

| W.V. (V D.C.) | 160 | 200 | 250 | 350 | 400 | 450 |
|---|---|---|---|---|---|---|
| Z(-25°C)/Z(20°C) | 2 | 2 | 3 | 5 | 6 | 6 |

■ Table 3 Frequency correction factor for ripple current

| Frequency (Hz) | 50, 60 | 120 | 1k | 10k ~ |
|---|---|---|---|---|
| Coefficient | 0.7 | 1 | 1.3 | 1.7 |

Remark

Standard long lead type

| Customer Part No | Matsushita Part No | W.V. (V D.C.) | Cap (μF) | tan δ | D.C.L. (μA) | Ripple current (mA rms.) *1 | Dim. (mm) | | | |
|---|---|---|---|---|---|---|---|---|---|---|
| | | | | | | | ϕD | L | F | ϕd |
| | ECA0JM330 | 6.3 | 33 | 0.28 | 3.0 | 60 | 5 | 11 | 2.0 | 0.50 |
| | ECA0JM470 | 6.3 | 47 | 0.28 | 3.0 | 60 | 5 | 11 | 2.0 | 0.50 |
| | ECA0JM101 | 6.3 | 100 | 0.28 | 6.3 | 130 | 5 | 11 | 2.0 | 0.50 |
| | ECA0JM221 | 6.3 | 220 | 0.28 | 13.8 | 240 | 5 | 11 | 2.0 | 0.50 |
| | ECA0JM331 | 6.3 | 330 | 0.28 | 20.7 | 300 | 6.3 | 11.2 | 2.5 | 0.50 |
| | ECA0JM471 | 6.3 | 470 | 0.28 | 29.6 | 380 | 6.3 | 11.2 | 2.5 | 0.50 |
| | ECA0JM102 | 6.3 | 1000 | 0.28 | 63.0 | 580 | 8 | 11.5 | 3.5 | 0.60 |
| | ECA0JM222 | 6.3 | 2200 | 0.30 | 138.6 | 890 | 10 | 16 | 5.0 | 0.60 |
| | ECA0JM332 | 6.3 | 3300 | 0.32 | 207.9 | 1020 | 10 | 20 | 5.0 | 0.60 |
| | ECA0JM472 | 6.3 | 4700 | 0.34 | 296.1 | 1170 | 12.5 | 20 | 5.0 | 0.60 |
| | ECA0JM682 | 6.3 | 6800 | 0.38 | 428.4 | 1270 | 12.5 | 25 | 5.0 | 0.60 |
| | ECA0JM103 | 6.3 | 10000 | 0.46 | 630.0 | 1450 | 16 | 25 | 7.5 | 0.80 |
| | ECA0JM153 | 6.3 | 15000 | 0.56 | 945.0 | 1700 | 16 | 31.5 | 7.5 | 0.80 |
| | ECA0JM223 | 6.3 | 22000 | 0.70 | 1386.0 | 1900 | 18 | 35.5 | 7.5 | 0.80 |
| | | | | | | | | | | |
| | ECA1AM101 | 10 | 100 | 0.24 | 10.0 | 150 | 5 | 11 | 2.0 | 0.50 |
| | ECA1AM221 | 10 | 220 | 0.24 | 22.0 | 250 | 6.3 | 11.2 | 2.5 | 0.50 |
| | ECA1AM221U | 10 | 220 | 0.24 | 22.0 | 240 | 5 | 11 | 2.0 | 0.50 |
| | ECA1AM331 | 10 | 330 | 0.24 | 33.0 | 330 | 6.3 | 11.2 | 2.5 | 0.50 |
| | ECA1AM471 | 10 | 470 | 0.24 | 47.0 | 400 | 8 | 11.5 | 3.5 | 0.60 |
| | ECA1AM471U | 10 | 470 | 0.24 | 47.0 | 350 | 6.3 | 11.2 | 2.5 | 0.50 |
| | ECA1AM102 | 10 | 1000 | 0.24 | 100.0 | 630 | 10 | 12.5 | 5.0 | 0.60 |
| | ECA1AM222 | 10 | 2200 | 0.26 | 220.0 | 920 | 10 | 20 | 5.0 | 0.60 |
| | ECA1AM222U | 10 | 2200 | 0.26 | 220.0 | 920 | 10 | 16 | 5.0 | 0.60 |
| | ECA1AM332 | 10 | 3300 | 0.28 | 330.0 | 1090 | 12.5 | 20 | 5.0 | 0.60 |
| | ECA1AM472 | 10 | 4700 | 0.30 | 470.0 | 1200 | 12.5 | 25 | 5.0 | 0.60 |
| | ECA1AM682 | 10 | 6800 | 0.34 | 680.0 | 1400 | 16 | 25 | 7.5 | 0.80 |
| | ECA1AM103 | 10 | 10000 | 0.42 | 1000.0 | 1600 | 16 | 31.5 | 7.5 | 0.80 |
| | ECA1AM153 | 10 | 15000 | 0.52 | 1500.0 | 1850 | 18 | 35.5 | 7.5 | 0.80 |
| | | | | | | | | | | |
| | ECA1CM100 | 16 | 10 | 0.20 | 3.0 | 30 | 5 | 11 | 2.0 | 0.50 |
| | ECA1CM220 | 16 | 22 | 0.20 | 3.5 | 75 | 5 | 11 | 2.0 | 0.50 |
| | ECA1CM330 | 16 | 33 | 0.20 | 5.2 | 110 | 5 | 11 | 2.0 | 0.50 |
| | ECA1CM470 | 16 | 47 | 0.20 | 7.5 | 130 | 5 | 11 | 2.0 | 0.50 |
| | ECA1CM680 | 16 | 68 | 0.20 | 10.9 | 140 | 5 | 11 | 2.0 | 0.50 |
| | ECA1CM101 | 16 | 100 | 0.20 | 16.0 | 180 | 5 | 11 | 2.0 | 0.50 |
| | ECA1CM221 | 16 | 220 | 0.20 | 35.2 | 280 | 6.3 | 11.2 | 2.5 | 0.50 |
| | ECA1CM331 | 16 | 330 | 0.20 | 52.8 | 350 | 8 | 11.5 | 3.5 | 0.60 |
| | ECA1CM471 | 16 | 470 | 0.20 | 75.2 | 440 | 8 | 11.5 | 3.5 | 0.60 |
| | ECA1CM102 | 16 | 1000 | 0.20 | 160.0 | 680 | 10 | 16 | 5.0 | 0.60 |
| | ECA1CM102L | 16 | 1000 | 0.20 | 160.0 | 680 | 8 | 20 | 3.5 | 0.60 |
| | ECA1CM102U | 16 | 1000 | 0.20 | 160.0 | 680 | 10 | 12.5 | 5.0 | 0.60 |
| | ECA1CM222 | 16 | 2200 | 0.22 | 352.0 | 1000 | 12.5 | 20 | 5.0 | 0.60 |
| | ECA1CM332 | 16 | 3300 | 0.24 | 528.0 | 1200 | 12.5 | 25 | 5.0 | 0.60 |

Remark

*1 120Hz 85°C

Standard long lead type

| Customer Part No | Matsushita Part No | W.V. (V D.C.) | Cap (μF) | tan δ max. | L.C. (μA) max. | Ripple current (mA rms.) max. *1 | Dim. (mm) | | | |
|---|---|---|---|---|---|---|---|---|---|---|
| | | | | | | | ϕD | L | P | ϕd |
| | ECA1CM472 | 16 | 4700 | 0.26 | 752.0 | 1360 | 16 | 25 | 7.5 | 0.80 |
| | ECA1CM472U | 16 | 4700 | 0.26 | 752.0 | 1088 | 16 | 20 | 7.5 | 0.80 |
| | ECA1CM682 | 16 | 6800 | 0.34 | 1088.0 | 1600 | 16 | 31.5 | 7.5 | 0.80 |
| | ECA1CM103 | 16 | 10000 | 0.42 | 1600.0 | 1800 | 18 | 35.5 | 7.5 | 0.80 |
| | | | | | | | | | | |
| | ECA1EM100 | 25 | 10 | 0.16 | 3.0 | 50 | 5 | 11 | 2.0 | 0.50 |
| | ECA1EM220 | 25 | 22 | 0.16 | 5.5 | 90 | 5 | 11 | 2.0 | 0.50 |
| | ECA1EM330 | 25 | 33 | 0.16 | 8.2 | 110 | 5 | 11 | 2.0 | 0.50 |
| | ECA1EM470 | 25 | 47 | 0.16 | 11.7 | 130 | 5 | 11 | 2.0 | 0.50 |
| | ECA1EM101 | 25 | 100 | 0.16 | 25.0 | 180 | 6.3 | 11.2 | 2.5 | 0.50 |
| | ECA1EM221 | 25 | 220 | 0.16 | 55.0 | 310 | 8 | 11.5 | 3.5 | 0.60 |
| | ECA1EM331 | 25 | 330 | 0.16 | 82.5 | 390 | 8 | 11.5 | 3.5 | 0.60 |
| | ECA1EM471 | 25 | 470 | 0.16 | 117.5 | 480 | 10 | 12.5 | 5.0 | 0.60 |
| | ECA1EM102 | 25 | 1000 | 0.16 | 250.0 | 850 | 10 | 20 | 5.0 | 0.60 |
| | ECA1EM102U | 25 | 1000 | 0.16 | 250.0 | 850 | 10 | 16 | 5.0 | 0.60 |
| | ECA1EM222 | 25 | 2200 | 0.18 | 550.0 | 1200 | 12.5 | 25 | 5.0 | 0.60 |
| | ECA1EM332 | 25 | 3300 | 0.20 | 825.0 | 1300 | 16 | 25 | 7.5 | 0.80 |
| | ECA1EM392 | 25 | 3900 | 0.20 | 975.0 | 1500 | 16 | 25 | 7.5 | 0.80 |
| | ECA1EM472 | 25 | 4700 | 0.22 | 1175.0 | 1500 | 16 | 31.5 | 7.5 | 0.80 |
| | ECA1EM472S | 25 | 4700 | 0.22 | 1175.0 | 1500 | 18 | 25 | 7.5 | 0.80 |
| | ECA1EM682 | 25 | 6800 | 0.26 | 1700.0 | 1750 | 18 | 35.5 | 7.5 | 0.80 |
| | ECA1EM822 | 25 | 8200 | 0.30 | 2050.0 | 1750 | 18 | 35.5 | 7.5 | 0.80 |
| | | | | | | | | | | |
| | ECA1VM100 | 35 | 10 | 0.14 | 3.5 | 60 | 5 | 11 | 2.0 | 0.50 |
| | ECA1VM220 | 35 | 22 | 0.14 | 7.7 | 95 | 5 | 11 | 2.0 | 0.50 |
| | ECA1VM330 | 35 | 33 | 0.14 | 11.5 | 110 | 5 | 11 | 2.0 | 0.50 |
| | ECA1VM470 | 35 | 47 | 0.14 | 16.4 | 130 | 5 | 11 | 2.0 | 0.50 |
| | ECA1VM101 | 35 | 100 | 0.14 | 35.0 | 210 | 6.3 | 11.2 | 2.5 | 0.50 |
| | ECA1VM221 | 35 | 220 | 0.14 | 77.0 | 350 | 8 | 11.5 | 3.5 | 0.60 |
| | ECA1VM331 | 35 | 330 | 0.14 | 115.5 | 440 | 10 | 12.5 | 5.0 | 0.60 |
| | ECA1VM471 | 35 | 470 | 0.14 | 164.5 | 550 | 10 | 16 | 5.0 | 0.60 |
| | ECA1VM102 | 35 | 1000 | 0.14 | 350.0 | 900 | 12.5 | 20 | 5.0 | 0.60 |
| | ECA1VM102U | 35 | 1000 | 0.14 | 350.0 | 900 | 10 | 20 | 5.0 | 0.60 |
| | ECA1VM222 | 35 | 2200 | 0.16 | 770.0 | 1250 | 16 | 25 | 7.5 | 0.80 |
| | ECA1VM332 | 35 | 3300 | 0.18 | 1155.0 | 1400 | 16 | 31.5 | 7.5 | 0.80 |
| | ECA1VM472 | 35 | 4700 | 0.20 | 1645.0 | 1600 | 18 | 35.5 | 7.5 | 0.80 |
| | ECA1VM562 | 35 | 5600 | 0.22 | 1645.0 | 1600 | 18 | 35.5 | 7.5 | 0.80 |
| | | | | | | | | | | |

Remark *1 120Hz 85°C

Standard long lead type

| Customer Part No | Matsushita Part No | W.V. (V D.C.) | Cap (μF) | tan δ max. | L.C. (μA) max. | Ripple current (mA rms.) max. *1 | Dim. (mm) | | | |
|---|---|---|---|---|---|---|---|---|---|---|
| | | | | | | | ϕD | L | P | ϕd |
| | ECA1HM0R1 | 50 | 0.1 | 0.12 | 3.0 | 1.3 | 5 | 11 | 2.0 | 0.50 |
| | ECA1HMR22 | 50 | 0.22 | 0.12 | 3.0 | 2.9 | 5 | 11 | 2.0 | 0.50 |
| | ECA1HMR33 | 50 | 0.33 | 0.12 | 3.0 | 4.4 | 5 | 11 | 2.0 | 0.50 |
| | ECA1HMR47 | 50 | 0.47 | 0.12 | 3.0 | 5 | 5 | 11 | 2.0 | 0.50 |
| | ECA1HMR68 | 50 | 0.68 | 0.12 | 3.0 | 7 | 5 | 11 | 2.0 | 0.50 |
| | ECA1HM010 | 50 | 1 | 0.12 | 3.0 | 10 | 5 | 11 | 2.0 | 0.50 |
| | ECA1HM2R2 | 50 | 2.2 | 0.12 | 3.0 | 20 | 5 | 11 | 2.0 | 0.50 |
| | ECA1HM3R3 | 50 | 3.3 | 0.12 | 3.0 | 35 | 5 | 11 | 2.0 | 0.50 |
| | ECA1HM4R7 | 50 | 4.7 | 0.12 | 3.0 | 45 | 5 | 11 | 2.0 | 0.50 |
| | ECA1HM6R8 | 50 | 6.8 | 0.12 | 3.0 | 7 | 5 | 11 | 2.0 | 0.50 |
| | ECA1HM100 | 50 | 10 | 0.12 | 5.0 | 65 | 5 | 11 | 2.0 | 0.50 |
| | ECA1HM220 | 50 | 22 | 0.12 | 11.0 | 100 | 5 | 11 | 2.0 | 0.50 |
| | ECA1HM330 | 50 | 33 | 0.12 | 16.5 | 110 | 5 | 11 | 2.0 | 0.50 |
| | ECA1HM470 | 50 | 47 | 0.12 | 23.5 | 130 | 6.3 | 11.2 | 2.5 | 0.50 |
| | ECA1HM101 | 50 | 100 | 0.12 | 50.0 | 250 | 8 | 11.5 | 3.5 | 0.60 |
| | ECA1HM221 | 50 | 220 | 0.12 | 110.0 | 400 | 10 | 12.5 | 5.0 | 0.60 |
| | ECA1HM331 | 50 | 330 | 0.12 | 165.0 | 500 | 10 | 16 | 5.0 | 0.60 |
| | ECA1HM471 | 50 | 470 | 0.12 | 235.0 | 650 | 10 | 20 | 5.0 | 0.60 |
| | ECA1HM102 | 50 | 1000 | 0.12 | 500.0 | 1050 | 12.5 | 25 | 5.0 | 0.60 |
| | ECA1HM222 | 50 | 2200 | 0.14 | 1100.0 | 1300 | 16 | 31.5 | 7.5 | 0.80 |
| | ECA1HM332 | 50 | 3300 | 0.16 | 1650.0 | 1500 | 18 | 35.5 | 7.5 | 0.80 |
| | | | | | | | | | | |
| | ECA1JM010 | 63 | 1 | 0.11 | 3.0 | 15 | 5 | 11 | 2.0 | 0.50 |
| | ECA1JM2R2 | 63 | 2.2 | 0.11 | 3.0 | 25 | 5 | 11 | 2.0 | 0.50 |
| | ECA1JM4R7 | 63 | 4.7 | 0.11 | 3.0 | 50 | 5 | 11 | 2.0 | 0.50 |
| | ECA1JM100 | 63 | 10 | 0.11 | 6.3 | 70 | 5 | 11 | 2.0 | 0.50 |
| | ECA1JM220 | 63 | 22 | 0.11 | 13.8 | 105 | 5 | 11 | 2.0 | 0.50 |
| | ECA1JM330 | 63 | 33 | 0.11 | 20.7 | 130 | 6.3 | 11.2 | 2.5 | 0.50 |
| | ECA1JM470 | 63 | 47 | 0.11 | 29.6 | 160 | 6.3 | 11.2 | 2.5 | 0.50 |
| | ECA1JM101 | 63 | 100 | 0.11 | 63.0 | 270 | 8 | 11.5 | 3.5 | 0.60 |
| | ECA1JM101S | 63 | 100 | 0.11 | 63.0 | 270 | 10 | 12.5 | 5.0 | 0.60 |
| | ECA1JM221 | 63 | 220 | 0.11 | 138.6 | 450 | 10 | 16 | 5.0 | 0.60 |
| | ECA1JM331 | 63 | 330 | 0.11 | 207.9 | 550 | 10 | 20 | 5.0 | 0.60 |
| | ECA1JM471 | 63 | 470 | 0.11 | 296.1 | 750 | 12.5 | 20 | 5.0 | 0.60 |
| | ECA1JM102 | 63 | 1000 | 0.11 | 630.0 | 1100 | 16 | 25 | 7.5 | 0.80 |
| | ECA1JM222 | 63 | 2200 | 0.13 | 1386.0 | 1400 | 18 | 35.5 | 7.5 | 0.80 |

Remark

*1 120Hz 85°C

Standard long lead type

| Customer Part No | Matsushita Part No | W.V. (V D.C.) | Cap (μF) | tan δ max. | L.C. (μA) max. | Ripple current (mA rms.) max. *1 | Dim. (mm) | | | |
|---|---|---|---|---|---|---|---|---|---|---|
| | | | | | | | ϕD | L | P | ϕd |
| | ECA2AMR47 | 100 | 0.47 | 0.06 | 3.0 | 10 | 5 | 11 | 2.0 | 0.50 |
| | ECA2AM010 | 100 | 1 | 0.06 | 3.0 | 20 | 5 | 11 | 2.0 | 0.50 |
| | ECA2AM2R2 | 100 | 2.2 | 0.06 | 3.0 | 30 | 5 | 11 | 2.0 | 0.50 |
| | ECA2AM3R3 | 100 | 3.3 | 0.06 | 3.0 | 40 | 5 | 11 | 2.0 | 0.50 |
| | ECA2AM4R7 | 100 | 4.7 | 0.06 | 3.0 | 50 | 5 | 11 | 2.0 | 0.50 |
| | ECA2AM100 | 100 | 10 | 0.06 | 10.0 | 70 | 5 | 11 | 2.0 | 0.50 |
| | ECA2AM220 | 100 | 22 | 0.06 | 22.0 | 115 | 6.3 | 11.2 | 2.5 | 0.50 |
| | ECA2AM330 | 100 | 33 | 0.06 | 33.0 | 145 | 8 | 11.5 | 3.5 | 0.60 |
| | ECA2AM470 | 100 | 47 | 0.06 | 47.0 | 180 | 8 | 11.5 | 3.5 | 0.60 |
| | ECA2AM101 | 100 | 100 | 0.06 | 100.0 | 350 | 10 | 16 | 5.0 | 0.60 |
| | ECA2AM221 | 100 | 220 | 0.06 | 220.0 | 550 | 12.5 | 20 | 5.0 | 0.60 |
| | ECA2AM331 | 100 | 330 | 0.06 | 330.0 | 700 | 12.5 | 25 | 5.0 | 0.60 |
| | ECA2AM471 | 100 | 470 | 0.06 | 470.0 | 900 | 16 | 25 | 7.5 | 0.80 |
| | ECA2AM102 | 100 | 1000 | 0.06 | 1000.0 | 1300 | 18 | 35.5 | 7.5 | 0.80 |
| | | | | | | | | | | |
| | ECA2CMR47 | 160 | 0.47 | 0.16 | 3.0 | 9.5 | 5 | 11 | 2.0 | 0.50 |
| | ECA2CM010 | 160 | 1 | 0.16 | 3.0 | 36 | 6.3 | 11.2 | 2.5 | 0.50 |
| | ECA2CM2R2 | 160 | 2.2 | 0.16 | 3.5 | 53 | 6.3 | 11.2 | 2.5 | 0.50 |
| | ECA2CM3R3 | 160 | 3.3 | 0.16 | 5.3 | 66 | 6.3 | 11.2 | 2.5 | 0.50 |
| | ECA2CM4R7 | 160 | 4.7 | 0.16 | 7.5 | 78 | 6.3 | 11.2 | 2.5 | 0.50 |
| | ECA2CM6R8 | 160 | 6.8 | 0.16 | 10.9 | 86 | 8 | 11.5 | 3.5 | 0.60 |
| | ECA2CM100 | 160 | 10 | 0.16 | 16.0 | 105 | 10 | 12.5 | 5.0 | 0.60 |
| | ECA2CM220 | 160 | 22 | 0.16 | 35.2 | 175 | 10 | 16 | 5.0 | 0.60 |
| | ECA2CM330 | 160 | 33 | 0.16 | 52.8 | 235 | 10 | 20 | 5.0 | 0.60 |
| | ECA2CM470 | 160 | 47 | 0.16 | 75.2 | 320 | 12.5 | 20 | 5.0 | 0.60 |
| | ECA2CM101 | 160 | 100 | 0.16 | 160.0 | 515 | 12.5 | 25 | 5.0 | 0.60 |
| | ECA2CM221 | 160 | 220 | 0.16 | 352.0 | 830 | 16 | 31.5 | 7.5 | 0.80 |
| | ECA2CM471 | 160 | 470 | 0.16 | 752.0 | 1440 | 18 | 40 | 7.5 | 0.80 |
| | | | | | | | | | | |
| | ECA2DM010 | 200 | 1 | 0.18 | 3.0 | 34 | 6.3 | 11.2 | 2.5 | 0.50 |
| | ECA2DM2R2 | 200 | 2.2 | 0.18 | 4.4 | 50 | 6.3 | 11.2 | 2.5 | 0.50 |
| | ECA2DM3R3 | 200 | 3.3 | 0.18 | 6.6 | 62 | 6.3 | 11.2 | 2.5 | 0.50 |
| | ECA2DM4R7 | 200 | 4.7 | 0.18 | 9.4 | 86 | 8 | 11.5 | 3.5 | 0.60 |
| | ECA2DM100 | 200 | 10 | 0.18 | 20.0 | 100 | 10 | 12.5 | 5.0 | 0.60 |
| | ECA2DM220 | 200 | 22 | 0.18 | 44.0 | 180 | 10 | 20 | 5.0 | 0.60 |
| | ECA2DM330 | 200 | 33 | 0.18 | 66.0 | 220 | 10 | 20 | 5.0 | 0.60 |
| | ECA2DM470 | 200 | 47 | 0.18 | 94.0 | 300 | 12.5 | 20 | 5.0 | 0.60 |
| | ECA2DM820 | 200 | 82 | 0.18 | 164.0 | 390 | 16 | 25 | 7.5 | 0.80 |
| | ECA2DM101 | 200 | 100 | 0.18 | 200.0 | 475 | 16 | 25 | 7.5 | 0.80 |
| | ECA2DM151 | 200 | 150 | 0.18 | 300.0 | 530 | 16 | 31.5 | 7.5 | 0.80 |
| | ECA2DM221U | 200 | 220 | 0.18 | 440.0 | 530 | 16 | 31.5 | 7.5 | 0.80 |
| | ECA2DM331U | 200 | 330 | 0.18 | 660.0 | 1140 | 18 | 35.5 | 7.5 | 0.80 |
| | ECA2DM331 | 200 | 330 | 0.18 | 660.0 | 1140 | 18 | 40 | 7.5 | 0.80 |

Remark

*1 120Hz 85°C

Standard long lead type

| Customer Part No | Matsushita Part No | W.V. (V D.C.) | Cap (μF) | tan δ max. | L.C. (μA) max. | Ripple current (mA rms.) max. *1 | Dim. (mm) | | | |
|---|---|---|---|---|---|---|---|---|---|---|
| | | | | | | | ϕD | L | P | ϕd |
| | ECA2EMR47 | 250 | 0.47 | 0.18 | 3.0 | 34 | 5 | 11 | 2.0 | 0.50 |
| | ECA2EM010 | 250 | 1 | 0.18 | 3.0 | 34 | 6.3 | 11.2 | 2.5 | 0.50 |
| | ECA1EM2R2 | 250 | 2.2 | 0.18 | 5.5 | 50 | 6.3 | 11.2 | 2.5 | 0.50 |
| | ECA2EM3R3 | 250 | 3.3 | 0.18 | 8.3 | 72 | 8 | 11.5 | 3.5 | 0.60 |
| | ECA2EM4R7 | 250 | 4.7 | 0.18 | 11.8 | 86 | 8 | 11.5 | 3.5 | 0.60 |
| | ECA2EM100 | 250 | 10 | 0.18 | 25.0 | 110 | 10 | 16 | 5.0 | 0.60 |
| | ECA2EM220 | 250 | 22 | 0.18 | 55.0 | 180 | 10 | 20 | 5.0 | 0.60 |
| | ECA2EM220U | 250 | 22 | 0.18 | 55.0 | 180 | 10 | 16 | 5.0 | 0.60 |
| | ECA2EM330 | 250 | 33 | 0.18 | 82.5 | 250 | 12.5 | 20 | 5.0 | 0.60 |
| | ECA2EM470 | 250 | 47 | 0.18 | 117.5 | 330 | 12.5 | 25 | 5.0 | 0.60 |
| | ECA2EM101 | 250 | 100 | 0.18 | 250.0 | 530 | 16 | 31.5 | 7.5 | 0.80 |
| | ECA2EM101S | 250 | 100 | 0.18 | 250.0 | 530 | 18 | 20 | 7.5 | 0.80 |
| | ECA2EM221 | 250 | 220 | 0.18 | 550.0 | 930 | 18 | 40 | 7.5 | 0.80 |
| | | | | | | | | | | |
| | ECA2VM010 | 350 | 1 | 0.20 | 3.5 | 32 | 6.3 | 11.2 | 2.5 | 0.50 |
| | ECA2VM2R2 | 350 | 2.2 | 0.20 | 7.7 | 55 | 8 | 11.5 | 3.5 | 0.60 |
| | ECA2VM3R3 | 350 | 3.3 | 0.20 | 11.6 | 60 | 8 | 11.5 | 3.5 | 0.60 |
| | ECA2VM4R7 | 350 | 4.7 | 0.20 | 16.5 | 65 | 10 | 12.5 | 5.0 | 0.50 |
| | ECA2VM100 | 350 | 10 | 0.20 | 35.0 | 115 | 10 | 20 | 5.0 | 0.60 |
| | ECA2VM220 | 350 | 22 | 0.20 | 77.0 | 195 | 12.5 | 20 | 5.0 | 0.60 |
| | ECA2VM330 | 350 | 33 | 0.20 | 115.5 | 300 | 16 | 25 | 7.5 | 0.80 |
| | ECA2VM470 | 350 | 47 | 0.20 | 164.5 | 325 | 16 | 25 | 7.5 | 0.80 |
| | | | | | | | | | | |
| | ECA2GM010 | 400 | 1 | 0.20 | 4.0 | 32 | 6.3 | 11.2 | 2.5 | 0.50 |
| | ECA2GM2R2 | 400 | 2.2 | 0.20 | 8.8 | 50 | 8 | 11.5 | 3.5 | 0.60 |
| | ECA2GM3R3 | 400 | 3.3 | 0.20 | 13.2 | 54 | 10 | 12.5 | 5.0 | 0.60 |
| | ECA2GM4R7 | 400 | 4.7 | 0.20 | 18.8 | 72 | 10 | 16 | 5.0 | 0.60 |
| | ECA2GM6R8 | 400 | 6.8 | 0.20 | 27.2 | 72 | 10 | 16 | 5.0 | 0.60 |
| | ECA2GM100 | 400 | 10 | 0.20 | 40.0 | 115 | 10 | 20 | 5.0 | 0.60 |
| | ECA2GM220 | 400 | 22 | 0.20 | 88.0 | 215 | 12.5 | 25 | 5.0 | 0.60 |
| | ECA2GM330 | 400 | 33 | 0.20 | 132.0 | 275 | 16 | 25 | 7.5 | 0.80 |
| | ECA2GM470 | 400 | 47 | 0.20 | 188.0 | 350 | 16 | 31.5 | 7.5 | 0.80 |
| | ECA2GM680U | 400 | 68 | 0.20 | 272.0 | 350 | 16 | 31.5 | 7.5 | 0.80 |
| | ECA2GM820 | 400 | 82 | 0.20 | 328.0 | 300 | 18 | 35.5 | 7.5 | 0.80 |
| | ECA2GM101 | 400 | 100 | 0.20 | 400.0 | 600 | 18 | 40 | 7.5 | 0.80 |
| | | | | | | | | | | |
| | ECA2WM010 | 450 | 1 | 0.20 | 4.5 | 37 | 8 | 11.5 | 3.5 | 0.60 |
| | ECA2WM2R2 | 450 | 2.2 | 0.20 | 9.9 | 44 | 10 | 12.5 | 5.0 | 0.60 |
| | ECA2WM3R3 | 450 | 3.3 | 0.20 | 14.9 | 60 | 10 | 16 | 5.0 | 0.60 |
| | ECA2WM4R7 | 450 | 4.7 | 0.20 | 21.2 | 79 | 10 | 20 | 5.0 | 0.60 |
| | ECA2WM100 | 450 | 10 | 0.20 | 45.0 | 130 | 12.5 | 20 | 5.0 | 0.60 |
| | ECA2WM220 | 450 | 22 | 0.20 | 99.0 | 210 | 16 | 25 | 7.5 | 0.80 |
| | ECA2WM330 | 450 | 33 | 0.20 | 148.5 | 285 | 16 | 31.5 | 7.5 | 0.80 |

Remark

*1 120Hz 85°C

ϕ5 ~ ϕ8

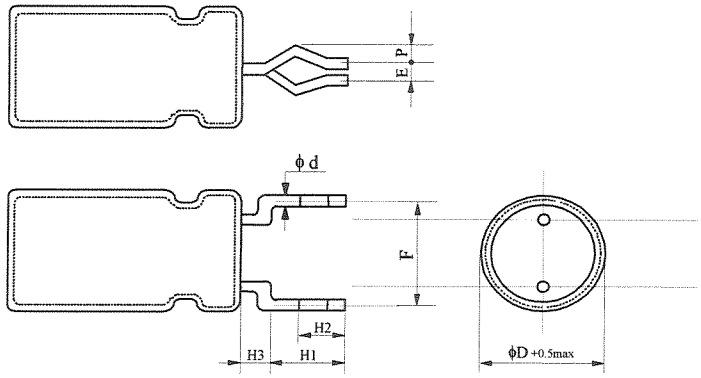


ϕ10 ~ ϕ18

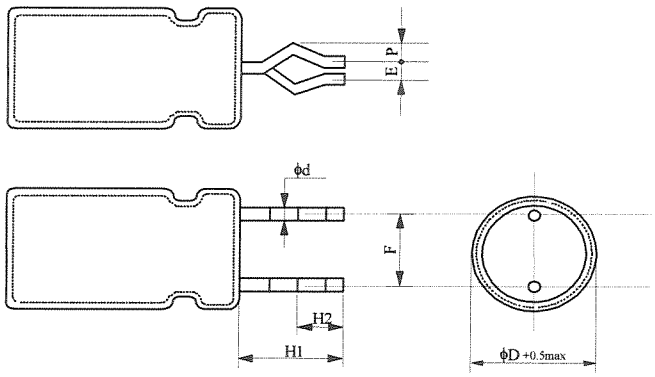


* Direction of bending shape is random

[unit : mm]

| ΦD | H1 ± 0.5 | H2 | H3 max. | F ± 0.5 | P | E max. | Φd ± 0.05 | P.W.B. | |
|---|---|---|---|---|---|---|---|---|---|
| | | | | | | | | Φ | t |
| 5 | 4.5 | 2.7 | 2.5 | 5.0 | 1.0 | 1.0 | 0.5 | 0.9 | 1.6 |
| 6.3 | 4.5 | 2.7 | 2.5 | 5.0 | 1.0 | 1.0 | 0.5/0.6 | 1.0 | 1.6 |
| 8 | 4.5 | 2.7 | 2.5 | 5.0 | 1.0 | 1.0 | 0.6 | 1.0 | 1.6 |
| 10 | 4.5 | 2.7 | - | 5.0 | 1.0 | 1.0 | 0.6 | 1.0 | 1.6 |
| 12.5 | 4.5 | 2.7 | - | 5.0 | 1.0 | 1.0 | 0.6 | 1.0 | 1.6 |
| 16 | 4.5 | 2.7 | - | 7.5 | 0.9 | 1.0 | 0.8 | 1.1 | 1.6 |
| 18 | 4.5 | 2.7 | - | 7.5 | 0.9 | 1.0 | 0.8 | 1.1 | 1.6 |

* The above lead forming dimensions shall be subjected only to Electrolytic Capacitor outgoing inspection and not to customer's incoming inspection.
Due to mechanical stress during transportation, actual dimensions may not meet to specification.

Remark

1) Application range
This specification is applied to aluminium electrolytic capacitor (JIS:04 type), taped with a single tape.

2) Taping shape and dimension :

ϕ5

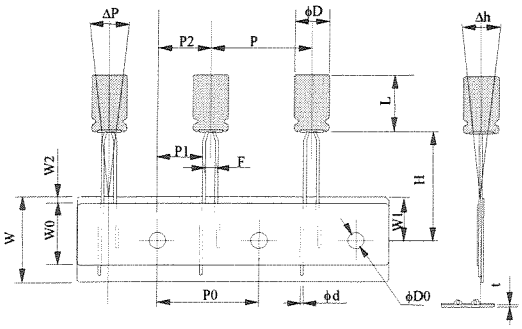


ϕ6.3

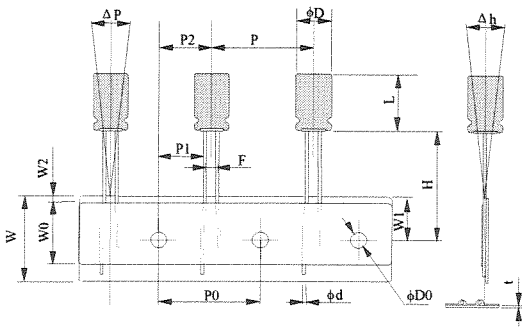


[mm]

| Item | Symbol | Dimensions | | Tolerance | Remarks |
|---|---|---|---|---|---|
| Product diameter | ϕD | 5 | 6.3 | + 0.50 | |
| Product length | L | 11.0 ~ 11.2 | | + 1.00 | |
| Lead wire diameter | ϕd | 0.50 | | ± 0.05 | |
| Product pitch | P | 12.70 | | ± 1.00 | |
| Feed hole pitch | P0 | 12.70 | | ± 0.20 | |
| Hole center to lead wire | P1 | 5.10 | | ± 0.50 | Specified by the contact face between tape and lead wire |
| Feed hole center to product center | P2 | 6.35 | | ± 1.00 | |
| Lead to lead distance | F | 2.50 | | ± 0.50 | Ditto |
| K liner width | W | 18.00 | | ± 0.50 | |
| Crepe tape width | W0 | 6.0 ≤ | | - | |
| Hole position | W1 | 9.00 | | ± 0.50 | |
| Crepe tape slipping | W2 | 1.50 max. | | - | |
| Product from hole height | H | 18.50 | | +0.75 / -0.50 | |
| Feed hole diameter | ϕD0 | 4.00 | | ± 0.20 | |
| Inclination of body | Δh | 1.00 ≥ | | - | Specified by the edge of aluminium |
| Inclination of body | ΔP | 1.00 ≥ | | - | |
| Total tape thickness | t | 0.60 | | ± 0.30 | CP wire is not included |

Remark

1) Application range
This specification is applied to aluminium electrolytic capacitor (JIS:04 type), taped with a single tape.

2) Taping shape and dimension :

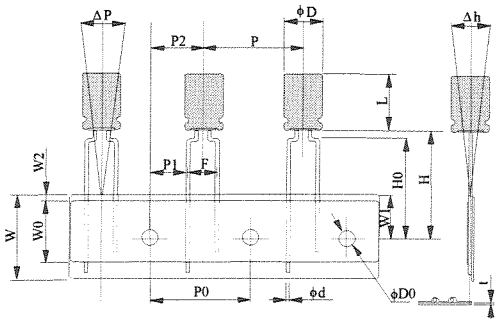


[mm]

| Item | Symbol | Dimensions | | | Tolerance | Remarks |
|---|---|---|---|---|---|---|
| Product diameter | ϕD | 5 | 6.3 | 8 | + 0.50 | |
| Product length | L | 11.0 ~ 11.5 | | | + 1.00 | |
| Lead wire diameter | ϕd | 0.50 | | 0.60 | ± 0.05 | |
| Product pitch | P | 12.70 | | | ± 1.00 | |
| Feed hole pitch | P0 | 12.70 | | | ± 0.20 | |
| Hole center to lead wire | P1 | 3.85 | | | ± 0.50 | Specified by the contact face between tape and lead wire |
| Feed hole center to product center | P2 | 6.35 | | | ± 1.00 | |
| Lead to lead distance | F | 5.00 | | | +0.80 / -0.20 | Ditto |
| K liner width | W | 18.00 | | | ± 0.50 | |
| Crepe tape width | W0 | 6.0 ≤ | | | - | |
| Hole position | W1 | 9.00 | | | ± 0.50 | |
| Crepe tape slipping | W2 | 1.50 max. | | | - | |
| Product from hole height | H | 18.5 | | 20.0 | +0.75 / -0.50 | |
| Product from hole height | H0 | 16.00 | | | ± 0.50 | |
| Feed hole diameter | ϕD0 | 4.00 | | | ± 0.20 | |
| Inclination of body | Δh | 1.00 ≥ | | | - | Specified by the edge of aluminium |
| Inclination of body | ΔP | 1.00 ≥ | | | - | |
| Total tape thickness | t | 0.60 | | | ± 0.30 | CP wire is not included |

Lead form angle, θ = 90° min


Remark

1) Application range
This specification is applied to aluminium electrolytic capacitor (JIS:04 type), taped with a single tape.

2) Taping shape and dimension :

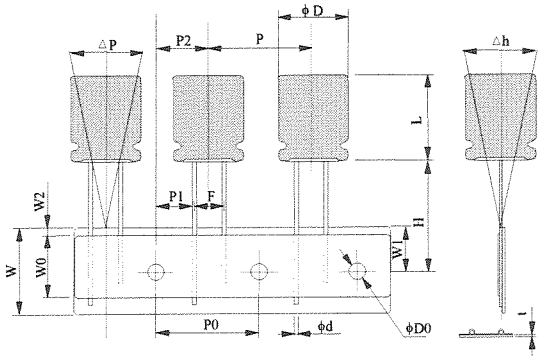


[mm]

| Item | Symbol | Dimensions | | Tolerance | Remarks |
|---|---|---|---|---|---|
| Product diameter | ϕD | 10 | 12.5 | + 0.50 | |
| Product length | L | 12.5 ~ 25.0 | | - | |
| Lead wire diameter | ϕd | 0.60 | | ± 0.05 | |
| Product pitch | P | 12.70 | 15.00 | ± 1.00 | |
| Feed hole pitch | P0 | 12.70 | 15.00 | ± 0.20 | |
| Hole center to lead wire | P1 | 3.85 | 5.00 | ± 0.50 | Specified by the contact face between tape and lead wire |
| Feed hole center to product center | P2 | 6.35 | 7.50 | ± 1.00 | |
| Lead to lead distance | F | 5.00 | | +0.80 / -0.20 | Ditto |
| K liner width | W | 18.00 | | ± 0.50 | |
| Crepe tape width | W0 | 6.0 ≤ | | - | |
| Hole position | W1 | 9.00 | | ± 0.50 | |
| Crepe tape slipping | W2 | 1.5 max. | | - | |
| Product from hole height | H | 18.50 | | +0.75 / -0.50 | |
| Feed hole diameter | ϕD0 | 4.00 | | ± 0.20 | |
| Inclination of body | Δh | 1.00≥ | | - | Specified by the edge of aluminium |
| Inclination of body | ΔP | 1.00≥ | | - | |
| Total tape thickness | t | 0.60 | | ± 0.30 | CP wire is not included |

Remark

1) Application range
This specification is applied to aluminium electrolytic capacitor (JIS:04 type), taped with a single tape.

2) Taping shape and dimension :

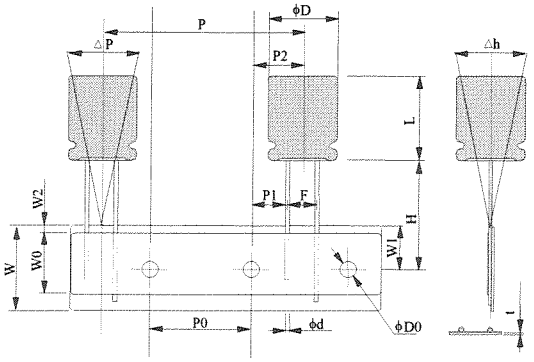


[mm]

| Item | Symbol | Dimensions | | Tolerance | Remarks |
|---|---|---|---|---|---|
| Product diameter | ϕD | 16 | 18 | + 0.50 | |
| Product length | L | 20~31.5 | 20~40 | + 2.00 | |
| Lead wire diameter | ϕd | 0.80 | | ± 0.05 | |
| Product pitch | P | 30.00 | | ± 1.00 | |
| Feed hole pitch | P0 | 15.00 | | ± 0.20 | |
| Hole center to lead wire | P1 | 3.75 | | ± 0.50 | Specified by the contact face between tape and lead wire |
| Feed hole center to product center | P2 | 7.50 | | ± 1.00 | |
| Lead to lead distance | F | 7.50 | | ± 0.50 | Ditto |
| K liner width | W | 18.00 | | ± 0.50 | |
| Crepe tape width | W0 | 6.0 ≤ | | - | |
| Hole position | W1 | 9.00 | | ± 0.50 | |
| Crepe tape slipping | W2 | 1.5 max. | | - | |
| Product from hole height | H | 18.50 | | +0.75 / -0.50 | |
| Feed hole diameter | ϕD0 | 4.00 | | ± 0.20 | |
| Inclination of body | Δh | 2.00≥ | | - | Specified by the edge of aluminium |
| Inclination of body | ΔP | 1.30≥ | | - | |
| Total tape thickness | t | 0.60 | | ± 0.30 | CP wire is not included |

Remark

1. Taping method

1-1 The capacitors shall be placed vertically on the base tape, and be fixed with the adhesive tape, with polarity oriented.

Example :

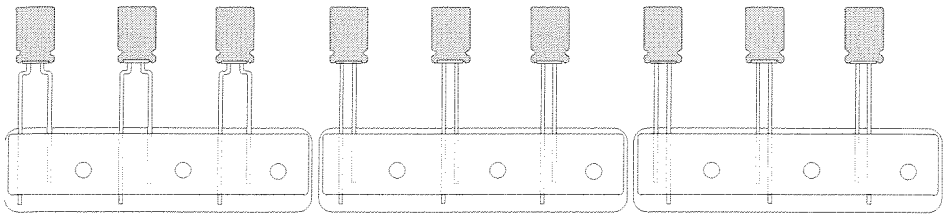

Polarity direction :

$\phi 5 \sim \phi 12.5$ : Negative on the right

$\phi 16 \sim \phi 18$ : Negative the left

1-2 Blank spaces for connection shall be no more than 3 pieces. The number of blank spaces shall not be limited.

1-3 The connection method is as follows. The portion shall meet the general taping specification. The position of connection shall not be limited.

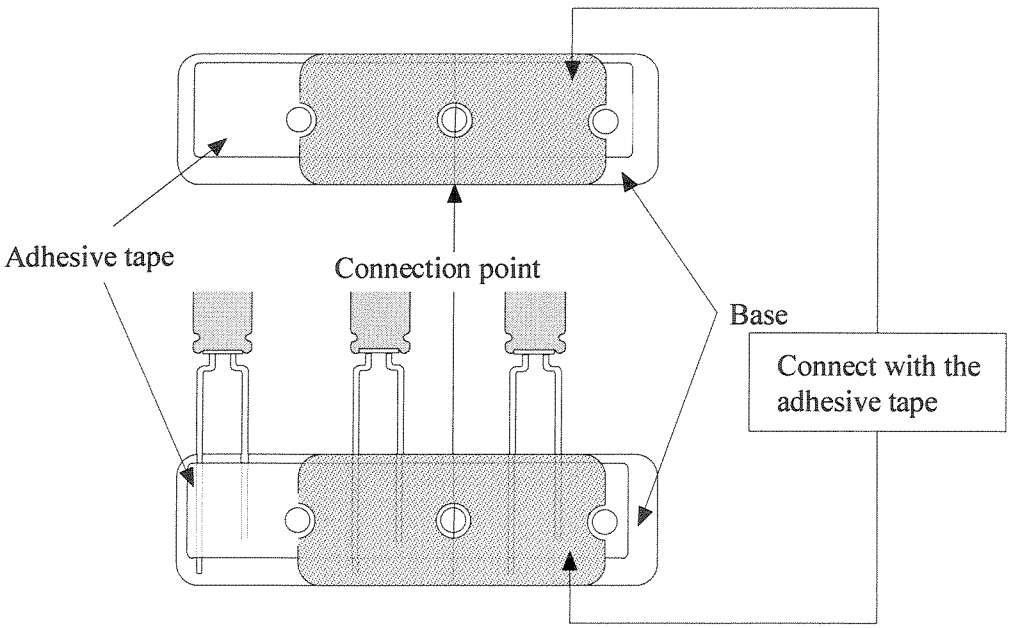


Note :

1) The base shall not be piled
2) The connection shall not be done with staples

Remark

1-4 In the case of removing the products after taping, lead wires shall be cut, or the capacitor shall be pulled out. The length of remaining lead wire shall be less than 2.0mm from the upper edge of
the base tape.

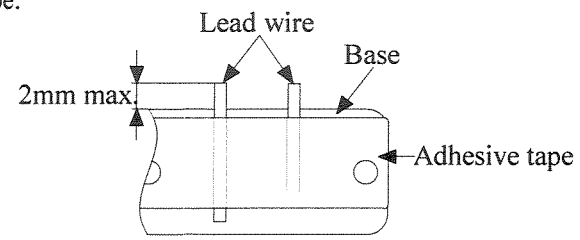


1-5 Tensile strength of lead wire after taping (applicable for the positive lead wire only) :
Fix the tape as below and pull the positive lead wire along the vertical direction by using the push pull scale.
The tensile strength shall be greater than 2.94N.

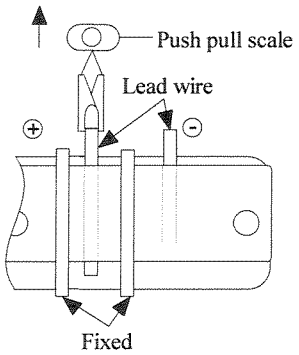


After storing for 250 hours in an atmosphere of 40 ± 2°C and 90 ~ 98%RH, the taped products shall meet the above specification and there shall be no inclination of the capacitors or masking the holes with the adhesive.

2. <u>Packing method</u>

2-1 Taped products shall be packed in a zigzag pattern into a cardboard box.
There shall be a single part number in an inner carton.
(Example)

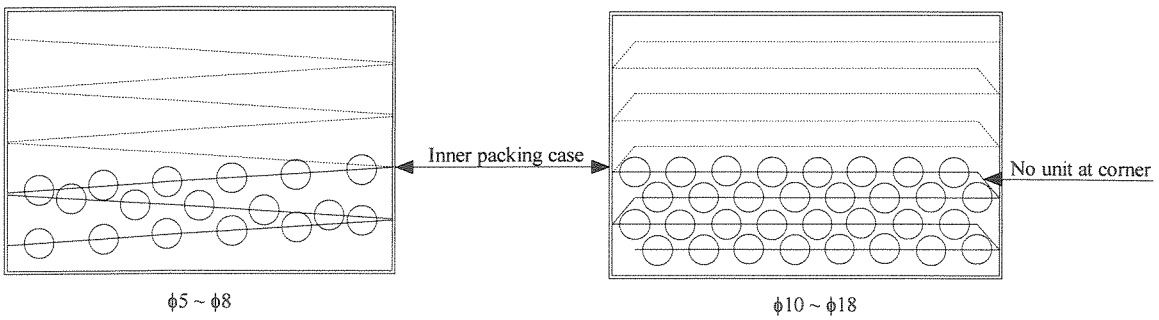


Remark

2-2 Polarity identification on a cardboard box shall match the polarity of products.

2-3 Inner carton box shall be handled as follows :

* No more than 10 inner carton boxes shall be piled.
* In the case of putting the boxes lengthways, the indication of polarity shall face upwards.
* The product shall be handled with care.

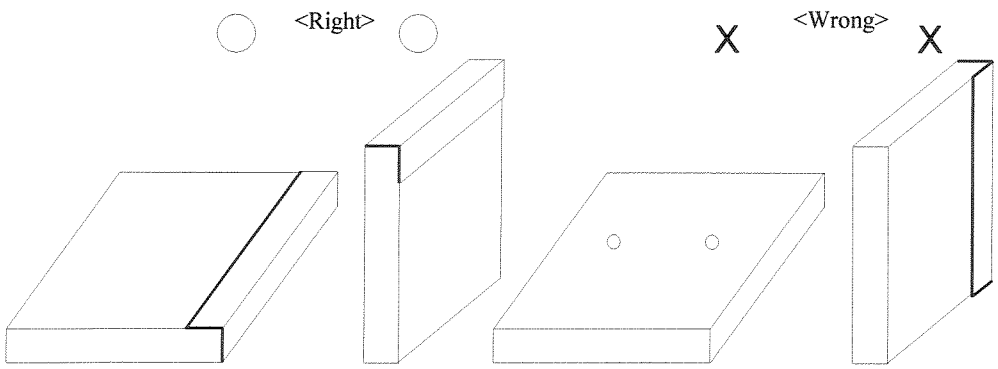


2-4 The inner cartons shall be packed in a cardboard box for transportation.
Various part numbers can be packed in an outer carton box.

2-5 Shape and dimensions of the inner carton shall be as follows. The lids have perforation for easy removal.

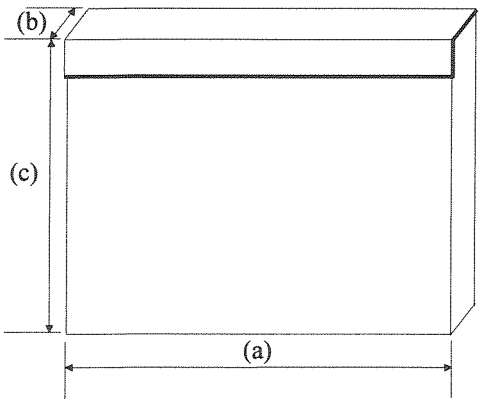


[mm]

| Can size | | (a) | (b) | (c) |
|---|---|---|---|---|
| ΦD | L | | | |
| 5 | 11 | 328 | 52 | 208 |
| 6.3 | 11.2 | 328 | 44 | 270 |
| 8 | 11.5 | 328 | 53 | 223 |
| | 20 | 328 | 59 | 223 |
| 10 | 12.5 | 337 | 50 | 169 |
| | 16 | 337 | 54 | 169 |
| | 20 | 337 | 57 | 169 |
| 12.5 | 20 | 324 | 57 | 264 |
| | 25 | 324 | 61 | 264 |
| 16 | 25 | 306 | 62 | 216 |
| | 31.5 | 217 | 68 | 312 |
| 18 | 35.5 | 275 | 73 | 343 |

Note : The dimensions listed above may change without prior notice.
The carton shall be suitable for the auto-insert machines after change.

Remark

2-6 Packing Quantity

| Product diameter (Φ) [mm] | Inner carton quantity [pcs] | Outer carton quantity [pcs] |
|---|---|---|
| 5 | 2000 | 10000 |
| 6.3 | 2000 | 10000 |
| 8 | 1000 | 5000 |
| 10 | 500 | 2000 |
| 12.5 | 500 | 2000 |
| 16 | 250 | 1000 |
| 18 | 250 | 500 |

3. Storage

3-1 The handling method shall follow Item 2-3 which is specified in this specification.

3-2 The product shall not be in contact with direct sunlight and the temperature and humidity shall be normal.

4. Ordering unit

The order placed shall be multiples of inner carton quantity.

Example :

ϕ5 ~ ϕ6.3 : minimum 2,000 pieces
ϕ8 : minimum 1,000 pieces
ϕ10 ~ ϕ12.5 : minimum 500 pieces
ϕ16 ~ ϕ18 : minimum 250 pieces

Remark

## 1. Circuit design

### 1.1 Operating Temperature and Frequency

Electrical parameters for electrolytic capacitors are normally specified at 20°C temperature and 120Hz frequency. These parameters vary with changes in temperature and frequency. Circuit designers should take these changes into consideration.

(1) Effects of operating temperature on electrical parameters

a) At higher temperatures, leakage current and capacitance increase while equivalent series resistance (ESR) decreases.

b) At lower temperatures, leakage current and capacitance decrease while equivalent series resistance (ESR) increases.

(2) Effects of frequency on electrical parameters

a) At higher frequencies, capacitance and impedance decrease while tan δ increases.

b) At lower frequencies, ripple current generated heat will rise due to an increase in equivalent series resistance (ESR).

### 1.2 Operating Temperature and Life Expectancy

(1) Expected life is affected by operating temperature. Generally, each 10°C reduction in temperature will double the expected life. Use capacitors at the lowest possible temperature below maximum guaranteed temperature.

(2) If operating temperatures exceed the maximum guaranteed limit, rapid electrical parameter deterioration will occur, and irreversible damage will result.
Check for maximum capacitor operating temperatures including ambient temperature, internal capacitor temperature rise caused by ripple current, and the effects of radiated heat from power transistors, IC's or resistors.

(3) The formula for calculating expected life at lower operating temperatures is as follows :

$$L2 = L1 \times 2^{\frac{T1-T2}{10}}$$

L1 : Guaranteed life (h) at temperature, T1 °C
L2 : Expected life (h) at temperature, T2 °C
T1 : Maximum operating temperature (°C)
T2 : Actual operating temperature, ambient temperature + temperature rise due to ripple current heating (°C)

### 1.3 Common Application Condition To Avoid

The following misapplication load conditions will cause rapid deterioration to capacitor electrical parameters. In addition, rapid heating and gas generation within the capacitor may occur causing the pressure relief vent to operate and resulting leakage of electrolyte. Under extreme conditions, explosion and fire may result.
Leaking electrolyte is combustible and electrically conductive.

(1) Reverse voltage
DC capacitors have polarity. Verify correct polarity before insertion. For circuits with changing or uncertain polarity, use DC bi-polar capacitors. DC bi-polar capacitors are not suitable for use in AC circuits.

(2) Charge/Discharge Applications
Standard capacitors are not suitable for use in repeating charge/discharge applications. For charge/discharge application, consult us and advise actual conditions.

(3) Overvoltage
Do not apply voltages exceeding the maximum specified rated voltage. Voltages within the surge voltage rating are acceptable for short periods of time. Ensure that the sum of the DC voltage and the superimposed AC ripple voltage does not exceed the maximum specified rated voltage.

(4) Ripple Current
Do not apply ripple currents exceeding the maximum specified value. For high ripple current applications, use a capacitor designed for high ripple currents or contact us with your requirements. Ensure that allowable ripple currents superimposed on low DC bias voltage do not cause reverse voltage conditions.

### 1.4 Using Two or More Capacitor in Series or Parallel

(1) Capacitors Connected in Parallel
The circuit resistance can closely approximate the series resistance of the capacitor causing an imbalance of ripple current loads within the capacitors. Careful design of wiring methods can minimize the possibility of excessive ripple currents applied to a capacitor.

(2) Capacitor Connected in Series
Normal DC leakage current differences among capacitors can cause voltage imbalances. The use of voltage divider shunt resistors with consideration to leakage currents, can prevent capacitor voltage imbalances.

**1.5 Capacitor Mounting Considerations**

(1) Double-sided Circuit Boards
Avoid wiring pattern runs which pass between the mounted capacitor and the circuit board. When dipping into a solder bath, excess solder may collect under the capacitor by capillary action and short-circuit the anode and cathode terminals.

(2) Circuit Board Hole Positioning
The vinyl sleeve of the capacitor can be damaged if solder passes through a lead hole for subsequently processed parts. Special care when locating hole positions in proximity to capacitors is recommended.

(3) Circuit Board Hole Spacing
The circuit board hole spacing should match the capacitor lead wire spacing within the specified tolerances. Incorrect spacing can cause excessive lead wire stress during the insertion process. This may result the premature capacitor failure doe to short or open circuit, increased leakage current, or electrolyte leakage.

(4) Clearance for Case Mounted Pressure Relief Vents
Capacitor with case mounted pressure relief vents requires sufficient clearance to allow for proper vent operation. The minimum clearances are dependent on capacitor diameters as follows :
$\phi$6.3 ~ $\phi$16mm : 2mm minimum, $\phi$18 mm : 3mm minimum

(5) Clearance for Seal Mounted Pressure Relief Vents
A hole in the circuit board directly under the seal vent location is required to allow proper release of pressure.

(6) Wiring Near the Pressure Relief Vent
Avoid locating high voltage or high current wiring or circuit board paths above the pressure relief vent. Flammable, high temperature gas exceeding 100°C may be released which could dissolve the wire insulation and ignite.

(7) Circuit Board Patterns Under the Capacitor
Avoid circuit board runs under the capacitor as electrolyte leakage could cause an electrical short.

(8) Screw Terminal Capacitor Mounting
Do not orient the capacitor with the screw terminal side of the capacitor facing downwards. Tighten the terminal and mounting bracket screws within the torque range specified in the specification.

**1.6 Electrical Isolation of the Capacitor**

Completely isolate the capacitor as follows :

(1) Between the cathode and the case (except for axially leaded B types) and between the anode terminal and other circuit paths.

(2) Between the extra mounting terminals (on T types) and the anode terminal, cathode terminal, and other circuit paths.

**1.7 Capacitor Sleeve**

The vinyl sleeve or laminate coating is intended for marking and identification purposes and is not meant to electrically insulate the capacitor.
The sleeving may split or crack if immersed into solvents such as toluene or xylene, and then exposed to high temperature.

*CAUTION!!!!*

Always consider safety when designing equipment and circuits. Plan for worst case failure modes such short circuits and open circuits which could occur during use.

(1) Provide protection circuits and protection devices to allow safe failure modes.

(2) Design redundant or secondary circuits where possible to assure continued operation in case of main circuit failure.

**2. Capacitor Handling Techniques**

**2.1 Consideration Before Using**

(1) Capacitors have a finite life. Do not reuse or recycle capacitors from used equipment.

(2) Transient recovery voltage may be generated in the capacitor due to dielectric absorption. If required, this voltage can be discharged with a resistor with a value of about 1 kΩ.

(3) Capacitors stored for long periods of time may exhibit an increase in leakage current. This can be connected by gradually applying rated voltage in series with a resistor of approximately 1 kΩ.

(4) If capacitors are dropped, they can be damaged mechanically or electrically. Avoid using dropped capacitors.
(5) Dented or crushed capacitors should not be used. The seal integrity can be compromised and loss of electrolyte/shortened life can result.

**2.2 Capacitor Insertion**
(1) Verify the correct capacitance and rated voltage of the capacitors.
(2) Verify the correct polarity of the capacitor before inserting.
(3) Verify the correct pole spacing before insertion (land pattern size in chip type) to avoid stress on the terminals.
(4) Ensure that the auto insertion equipment lead clinching operation does not stress the capacitor leads where they enter the seal of the capacitors. For chip type capacitors, excessive mounting pressure can cause high leakage current, short circuit, or disconnection.

**2.3 Manual Soldering**
(1) Observe temperature and time soldering specifications and do not exceed temperatures of 350°C for 3 seconds or less.
(2) If lead wires must be formed to meet terminal board hole spacing, avoid stress on the lead wire where it enters the capacitor seal.
(3) If a soldered capacitor must be removed and reinserted, avoid excessive stress to the capacitor leads.
(4) Avoid touching the tip of the soldering iron to the capacitor, to prevent melting of the vinyl sleeve.

**2.4 Flow Soldering**
(1) Do not immerse the capacitor body into the solder bath as excessive internal pressure could result.
(2) Observe proper soldering conditions (temperature, time, etc.). Do not exceed the specified limits.
(3) Do not allow other parts or components to touch the capacitor during soldering.

**2.5 Other Soldering Consideration**
Rapid temperature rises during the preheat operation and resin bonding operation can cause cracking of the capacitor vinyl sleeve.
For heat curing, do not exceed 150°C for a maximum time of 2 minutes.

**2.6 Capacitor Handling after Soldering**
(1) Avoid movement of the capacitor after soldering to prevent excessive stress on the lead wires where they enter the seal.
(2) Do not use the capacitor as a handle when moving the circuit board assembly.
(3) Avoid striking the capacitor after assembly to prevent failure due to excessive shock.

**2.7 Circuit Board Cleaning**
(1) Circuit boards can be immersed or ultrasonically cleaned using suitable cleaning solvents for up to 5 minutes and up to 60°C maximum temperatures. The boards should be thoroughly rinsed and dried.
The use of ozone depleting cleaning agents are not recommended in the interest of protecting the environment.
(2) Avoid using following solvent groups unless specifically allowed for in the specification :
Halogenated cleaning solvent except for solvent resistant capacitor types, halogenated solvents can permeate the seal and cause internal capacitor corrosion and failure. For solvent resistant capacitors, carefully follow the temperature and time requirements for the specification. 1-1-1 trichloroethane should never be used on any aluminium electrolytic capacitor.
- Alkali solvent : could attack and dissolve aluminium case.
- Petroleum based solvent : deterioration of the rubber seal could result.
- Xylene : deterioration of the rubber seal could result.
- Acetone : removal of the ink markings on the vinyl sleeve could result.

(3) A thorough drying after cleaning is required to remove residual cleaning solvents which maybe trapped between the capacitor and the circuit board. Avoid drying temperatures which exceed the maximum rated temperature of the capacitor.
(4) Monitor the contamination levels of the cleaning solvents during use by electrical conductivity, pH, specific gravity, or water content. Chlorine levels can rise with contamination and adversely affect the performance of the capacitor.

**2.8 Mounting Adhesives and Coating Agents**

When using mounting adhesives or coating agents to control humidity, avoid using materials containing halogenated solvents. Also, avoid the use of chloroprene base polymers.

After applying adhesives or coatings, dry thoroughly to prevent residual solvents from being trapped between the capacitor and the circuit board.

**2.9 Fumigation**

In exporting electronic appliances with aluminium electrolytic capacitors, in some cases fumigation treatment using such halogen compound as methyl bromide is conducted for wooden boxes. If such boxes are not dried well, the halogen left in the box is dispersed while transported and enters in the capacitors inside. This possibly causes electrical corrosion of the capacitors. Therefore, after performing fumigation and drying make sure that no halogen is left. Don't perform fumigation treatment to the whole electronic appliances packed in a box.

**3.0 Precaution for using Capacitors**

**3.1 Environmental Conditions**

Capacitors should not be stored or used in the following environments.

(1) Temperature exposure above the maximum rated or below the minimum rated temperature of the capacitors.
(2) Direct contact with water, salt water, or oil.
(3) High humidity condition where water could condense on the capacitor.
(4) Exposure to toxic gases such as hydrogen sulphide, sulphuric acid, nitric acid, chlorine, or ammonia.
(5) Exposure to ozone, radiation, or ultraviolet rays.
(6) Vibration and shock conditions exceeding specified requirements.

**3.2 Electrical Precaution**

(1) Avoid touching the terminals of the capacitor as possible electric shock could result. The exposed aluminium case is not insulated and could also cause electric shock if touched.
(2) Avoid short circuiting the area between the capacitor terminals with conductive materials including liquids such as acids and alkaline solutions.

**4.0 Emergency Procedures**

(1) If the pressure relief vent of the capacitor operates, immediately turn off the equipment and disconnect from the power source. This will minimize additional damage caused by the vaporizing electrolyte.
(2) Avoid contact with the escaping electrolyte gas which exceeds 100°C temperatures. If electrolyte or gas enters the eye, immediately flush the eye with large amount of water. If electrolyte or gas is ingested by mouth, gargle with water. If electrolyte contacts the skin, wash with soap and water.

**5.0 Long Term Storage**

Leakage current of a capacitor increases with long storage times. The aluminium oxide film deteriorates as a function of temperature and time. If used without reconditioning, an abnormally high current will be required to restore the oxide film. This current surge could cause the circuit or the capacitor to fail. In-order to keep the capacitor life, we recommend the capacitor store in-doors and temperature between 15°C ~ 35°C. Expiry date of capacitor shall be according to product model or type. Please consult us concerning the product life model by model. After storing exceeding the expiry date of the product, a capacitor should be reconditioned by applying rated voltage in series with a 1000Ω, current limiting resistor for a time period of 30 minutes.

**5.1 Environmental Conditions**

(1) Temperature exposure above the maximum rated or below the minimum rated temperature of the capacitor.
(2) Direct contact with water, salt water, or oil.
(3) High humidity conditions where water could condense on the capacitor.
(4) Exposure to toxic gases such as hydrogen sulphide, sulphuric acid, nitric acid, chlorine, or ammonia.
(5) Exposure to ozone, radiation, or ultraviolet rays.
(6) Vibration and shock conditions exceeding specified requirements.

**6.0 Capacitor Disposal**

When disposing of capacitors, use on of the following methods :

(1) Incinerate after crushing the capacitor or puncturing the can wall (to prevent explosion due to internal pressure rise). Capacitors should be incinerated at high temperature to prevent the release of toxic gases such as chlorine from the polyvinyl chloride sleeve, etc.
(2) Disposal of solid waste.

NOTE : Local laws may have specific disposal requirements which must be followed.