PART NAME	NEMA 4X ENCLOSURE	PART No.	PNR-2602, PNR-2602-C AND PNR-2602-DG PNR-2603, PNR-2603-C AND PNR-2603-DG	REV. DATE	11-17-08

INDUSTRY STANDARDS:

POLYCARBONATE (LIGHT GRAY AND CLEAR)
- UL94-HB FLAMMABILITY RATING (UL FILE #E41613)
- UV STABILIZED
- SERVICE TEMPERATURE RANGE: -40°C TO +120°C

ABS (DARK GRAY)
- UL94-HB FLAMMABILITY RATING (UL FILE #E56070)
- SERVICE TEMPERATURE RANGE: -40°C TO +80°C

PART NUMBER	DIMENSION			
	A	B	C	D
PNR-2602, PNR-2602-C AND PNR-2602-DG	1.640	1.580	2.180	1.642
PNR-2603, PNR-2603-C AND PNR-2603-DG	2.840	2.780	3.380	2.842

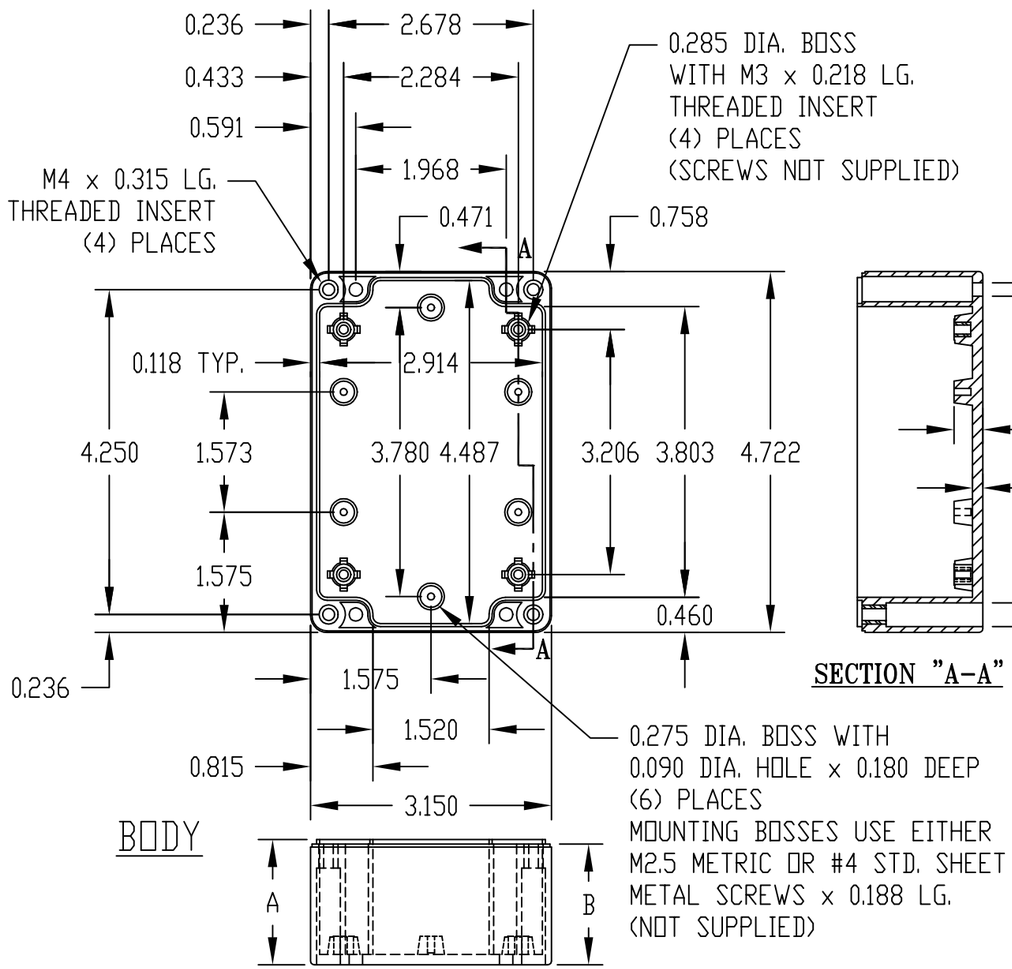

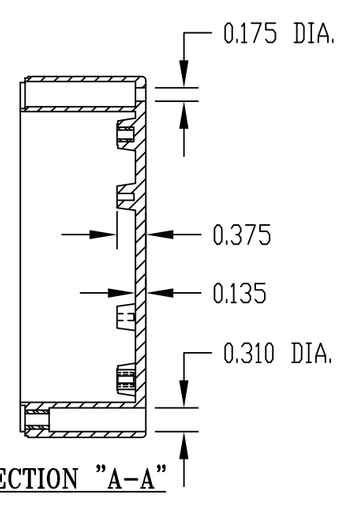

SECTION "A-A"

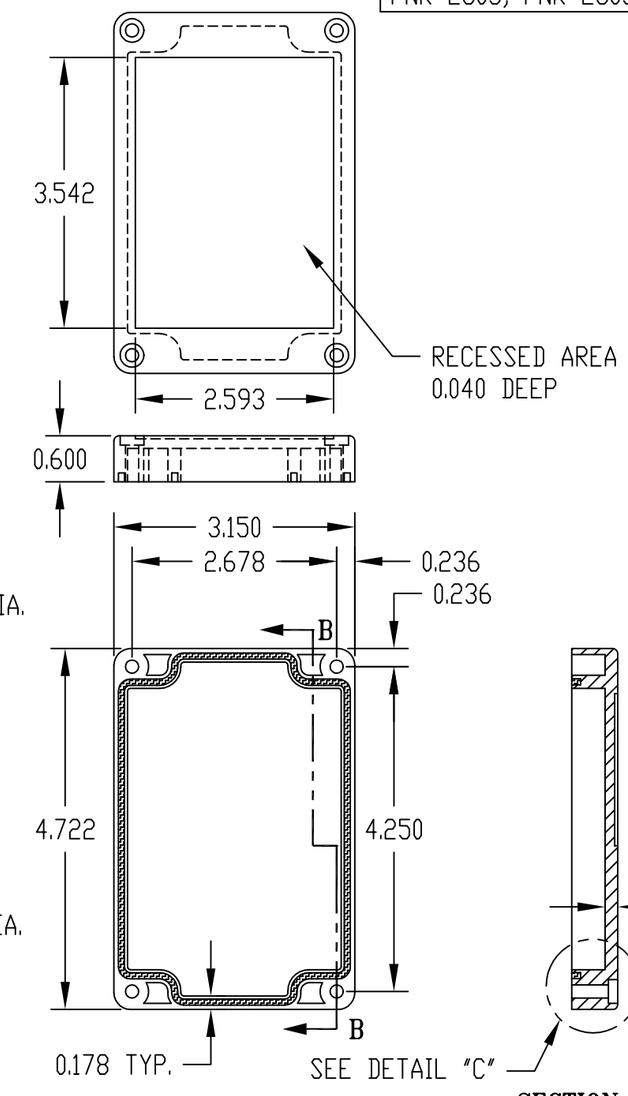

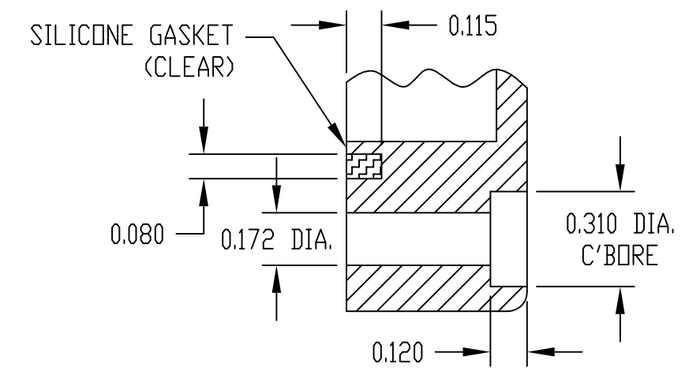

DETAIL "C"

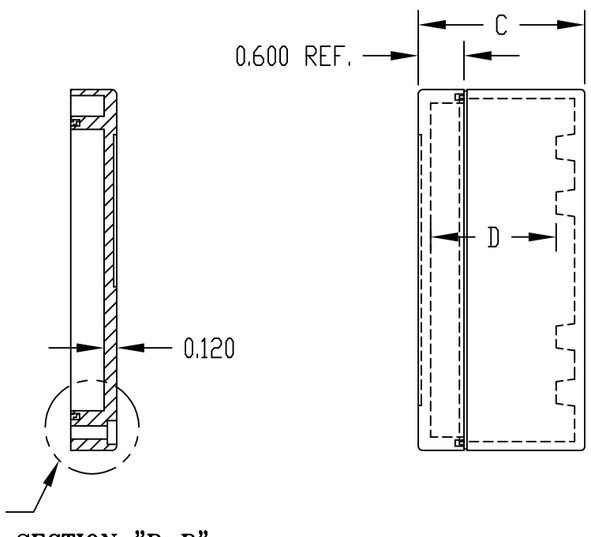

SECTION "B-B"

NOTE: ALL DIMENSIONS HAVE ±0.015 TOLERANCE UNLESS OTHERWISE SPECIFIED.

PART NUMBER	MATERIAL		FINISH		HARDWARE KIT
	BODY	COVER	BODY	COVER	
PNR-2602 & PNR-2603	POLYCARBONATE		LIGHT GRAY		KIT CONTAINS (4) M4 x 17mm (0.668") LG. SCREWS FOR ASSEMBLY
PNR-2602-C & PNR-2603-C	POLYCARBONATE		LIGHT GRAY	CLEAR	
PNR-2602-DG & PNR-2603-DG	HIGH-IMPACT ABS		DARK GRAY		