THIS DRAWING IS UNPUBLISHED. RELEASED FOR PUBLICATION -,- .
© COPYRIGHT - By - ALL RIGHTS RESERVED.

LOC	DIST
AF	50

REVISIONS

P	LTR	DESCRIPTION	DATE	DWN	APVD
	G	REVISED PER ECR-12-013445	09NOV12	KH	PD

1 CONTINUOUS STRIP ON REELS.

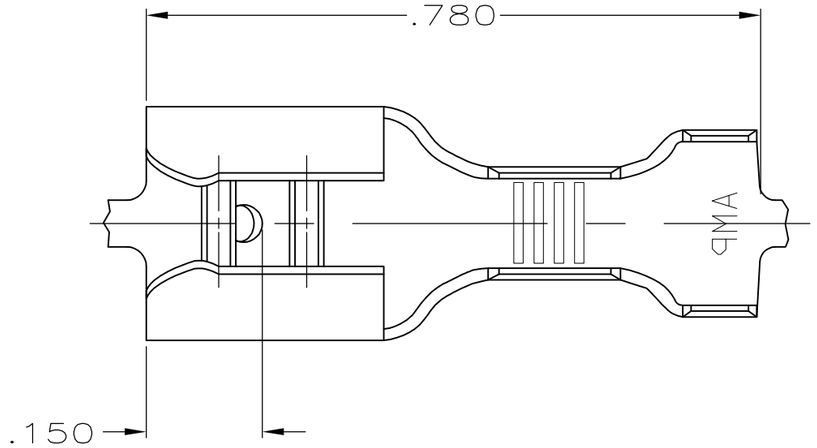

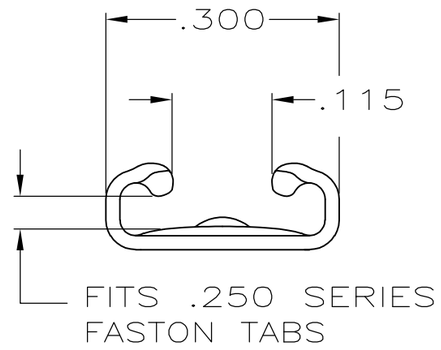

VIEW A—A

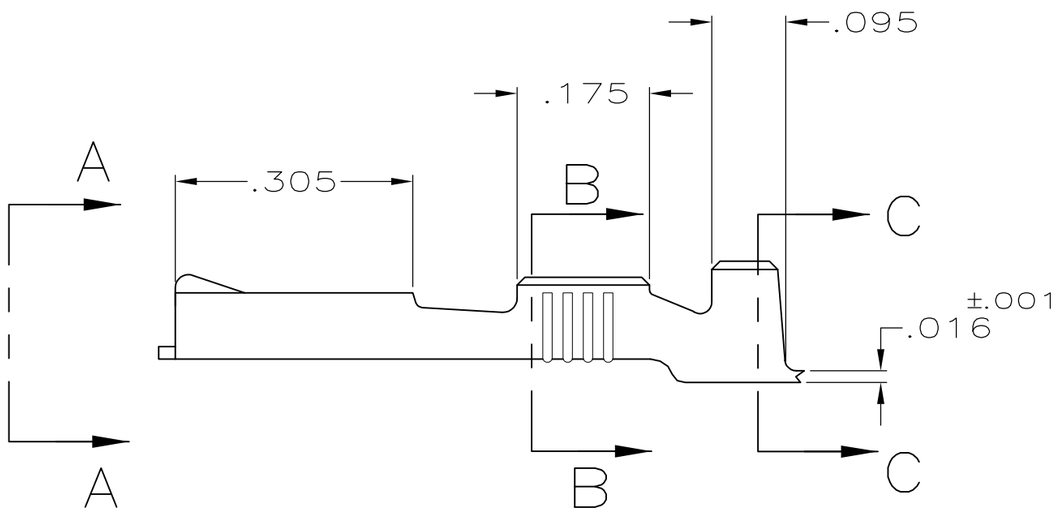

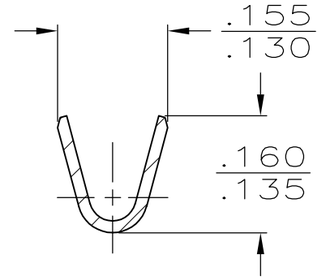

SECTION B—B

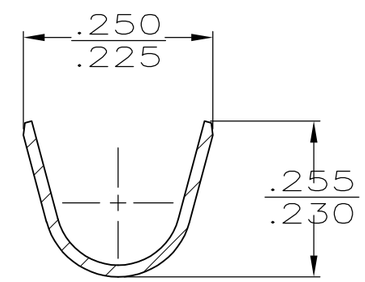

SECTION C—C

FINISH	INSULATION RANGE	WIRE SIZE	MATING TAB THK ±.001	PART NUMBER
TIN	.150–.210 DIA	18–14 AWG	.032	42692–2
–				42692–1

THIS DRAWING IS A CONTROLLED DOCUMENT.

DIMENSIONS: INCHES

TOLERANCES UNLESS OTHERWISE SPECIFIED:

0 PLC	± –
1 PLC	± –
2 PLC	± –
3 PLC	± .015
4 PLC	± –
ANGLES	± –

MATERIAL: BRASS

FINISH: SEE TABLE

DWN	JR RUTH	4/15/91
CHK	MS FEHER	4/15/91
APVD	C MEYERS	4/15/91
PRODUCT SPEC	—	
APPLICATION SPEC	—	
WEIGHT	—	

CUSTOMER DRAWING

TE Connectivity

NAME: RECEPTACLE, FASTON, .250 SERIES

SIZE	CAGE CODE	DRAWING NO	RESTRICTED TO
A3	00779	C-42692	—

SCALE	SHEET	REV
5:1	1 OF 1	G