THIS DRAWING IS UNPUBLISHED. RELEASED FOR PUBLICATION -,- .
© COPYRIGHT - BY TYCO ELECTRONICS CORPORATION. ALL RIGHTS RESERVED.

LOC	DIST
AF	50

REVISIONS

P	LTR	DESCRIPTION	DATE	DWN	APVD
	H1	REVISED PER ECR-07-012344	05JUN07	HMR	DD

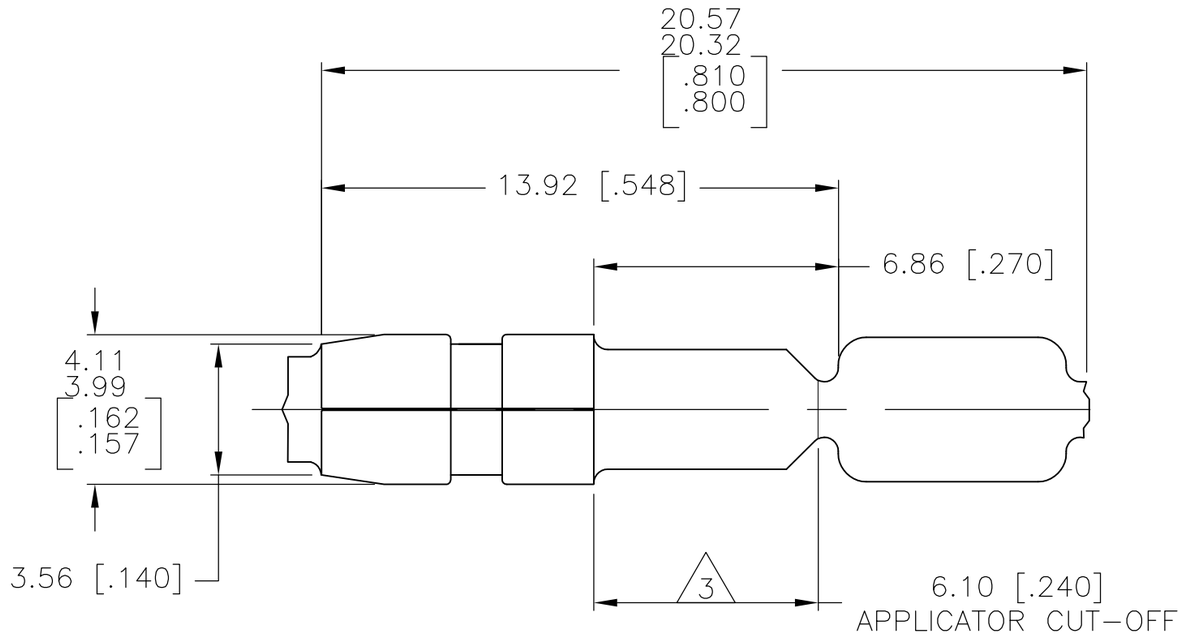

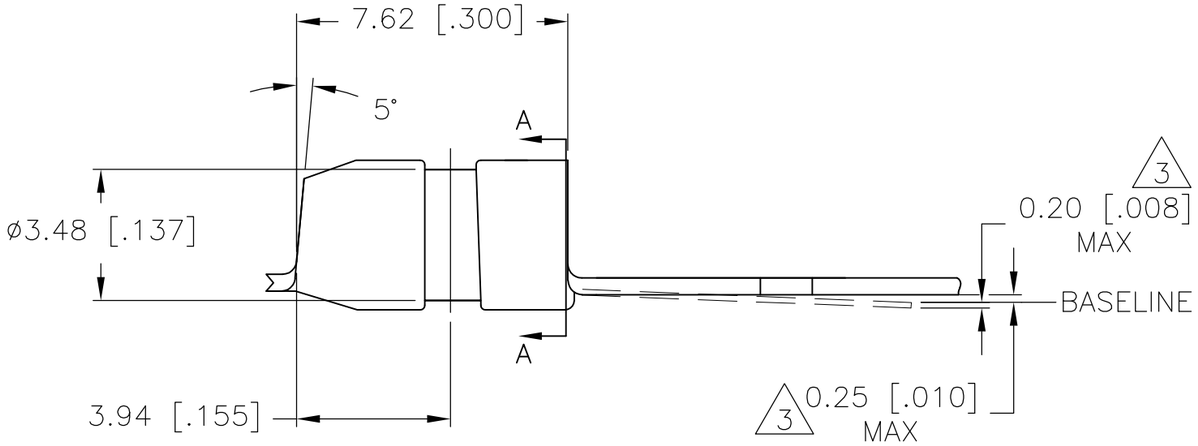

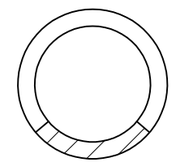

SECTION A-A

1 DIMENSIONS IN BRACKETS ARE IN INCHES

2 CONTINUOUS STRIP ON REELS

3 0.25 [.010] MAX DIM ABOVE BASELINE,
0.20 [.008] MAX DIM BELOW BASELINE,
TO BE HELD OVER 6.10 [.240] APPLICATOR CUT-OFF.

4 REELED WITH PAPER

5 PRELIMINARY NOT FOR PRODUCTION.

FINISH	MATERIAL	PART NO
4 PRE-TIN	0.46 [.018] BRASS	62829-3
-	0.46 [.018] NI-SILVER(65-18)	5 62829-2
PRE-TIN	0.46 [.018] BRASS	62829-1

THIS DRAWING IS A CONTROLLED DOCUMENT.

DIMENSIONS: mm [INCHES]

TOLERANCES UNLESS OTHERWISE SPECIFIED:

0 PLC	± -
1 PLC	± -
2 PLC	± -
3 PLC	± 0.38[.015]
4 PLC	± -
ANGLES	± -

MATERIAL: SEE TABLE

FINISH: SEE TABLE

DWN RAGHAVENDRA 05JUN07
CHK D DECKER 05JUN07
APVD D DECKER 05JUN07
PRODUCT SPEC —
APPLICATION SPEC —
WEIGHT —

CUSTOMER DRAWING

tyco Electronics
Tyco Electronics Corporation
Harrisburg, Pa 17105-3608

NAME: .156 DIA SHUR PLUG

SIZE	CAGE CODE	DRAWING NO	RESTRICTED TO
A3	00779	C-62829	—

SCALE 6:1 SHEET 1 OF 1 REV H1