Feb.1.2018 Copyright 2018 HIROSE ELECTRIC CO., LTD. All Rights Reserved.

	COUNT	DESCRIPTION OF REVISIONS	BY	CHKD	DATE		COUNT	DESCRIPTION OF REVISIONS	BY	CHKD	DATE
△					. .	△					. .
△					. .	△					. .
△					. .	△					. .

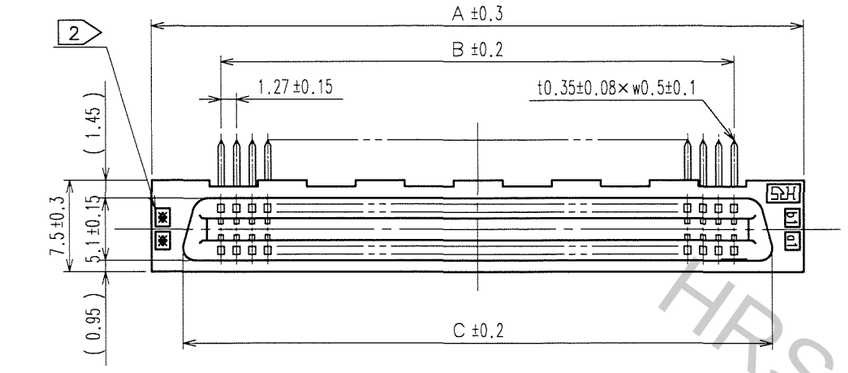

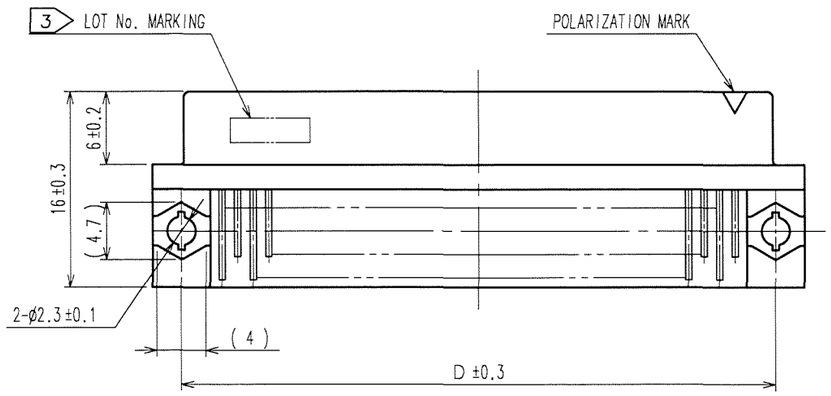

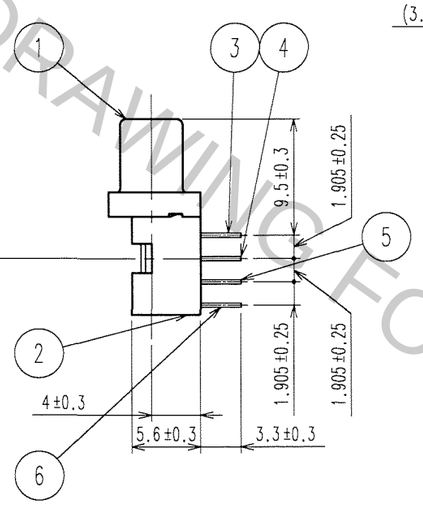

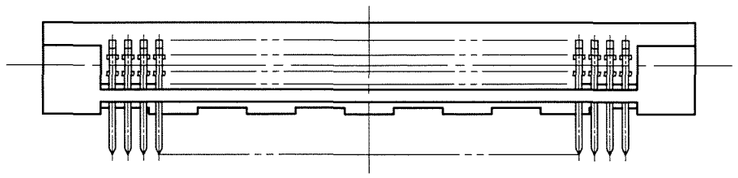

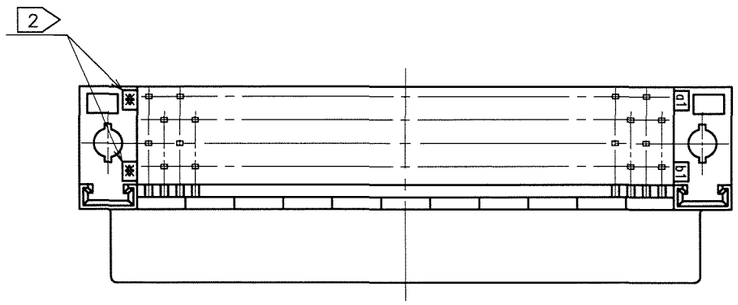

RECOMMENDED PC BOARD HOLE PATTERN (MOUNTING SIDE)

t=1.6

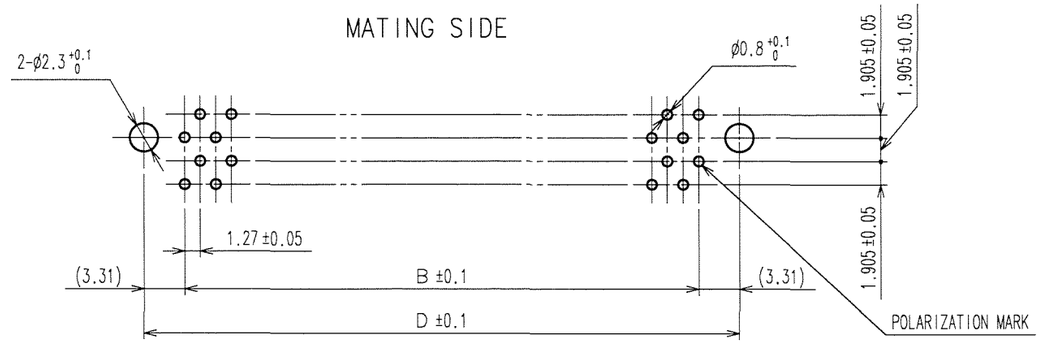

PART No.	HRS No.	1	A	B	C	D	2
FX2-20S-1.27DS(71)	CL572-2701-0-71	20	22.75	11.43	17.63	18.05	10
FX2-32S-1.27DS(71)	CL572-2702-3-71	32	30.37	19.05	25.25	25.67	16
FX2-40S-1.27DS(71)	CL572-2703-6-71	40	35.45	24.13	30.33	30.75	20
FX2-52S-1.27DS(71)	CL572-2704-9-71	52	43.07	31.75	37.95	38.37	26
FX2-60S-1.27DS(71)	CL572-2705-1-71	60	48.15	36.83	43.03	43.45	30
FX2-68S-1.27DS(71)	CL572-2706-4-71	68	53.23	41.91	48.11	48.53	34
FX2-80S-1.27DS(71)	CL572-2707-7-71	80	60.85	49.53	55.73	56.15	40
FX2-100S-1.27DS(71)	CL572-2708-0-71	100	73.55	62.23	68.43	68.85	50
FX2-120S-1.27DS(71)	CL572-2709-2-71	120	86.25	74.93	81.13	81.55	60

NOTE
1 NUMBER OF PIN.
2 INDICATIONS.
3 SURFACE INDICATED LOT NO. SHALL BE OPTIONAL.
4 THE DIMENSIONS IN PARENTHESES ARE FOR REFERENCE.

NO.	MATERIAL	FINISH, REMARKS
2	POLYAMIDE	BLACK UL94V-0
1	POLYAMIDE	BLACK UL94V-0

NO.	MATERIAL	FINISH, REMARKS
3~6	PHOSPHOR BRONZE	CONTACT AREA : GOLD 0.2μm min. DIP AREA : TIN-PLATING 2μm min. UNDER PLATING : NICKEL 2μm min.

CODE NO.(OLD)	DRAWN	DESIGNED	CHECKED	APPROVED	RELEASED
CL	S.KAMIGA '06. 03. 25	K.Nakamura '06-03-27	K.Ozawa '06-03-27	H.Okawa '06-03-27	. .

SCALE FREE
UNITS mm

DRAWING NO. EDC3-083295-21

HRS HIROSE ELECTRIC CO., LTD

PART NO. FX2-**S-1.27DS(71)

CODE NO. CL572

1/1

FORM NO.229

TO
PCK

HRS DRAWING FOR REFERENCE