Mat'l: UL94 V2 Nylon 6/6 Color: Natural	Screw Size	"L" ± .015 (0.38)	"A" ± .007 (0.18)	"B" ± .007 (0.18)	"C" ± .005 (0.13)	"D" ± .005 (0.13)	Material
MNI#2-2	#2 (M2)	.031 (0.8)	.181 (4.6)	.047 (1.2)	.120 (3)	.090 (2.3)	RMS-01
MNI#2-4		.063 (1.6)					
*MNI#2-6		.093 (2.4)			.118 (3)		
MNI#4-2	#4 (M2.5)	.031 (0.8)	.235 (6)		.145 (3.7)	.115 (2.9)	
MNI#4-3		.046 (1.2)					
MNI#4-4		.063 (1.6)					
MNI#4-5		.084 (2.1)	.252 (6.4)		.140 (3.6)		
MNI#4-6		.093 (2.4)	.235 (6)		.145 (3.7)		
MNI#4-8		.125 (3.2)					
MNI#4-10		.156 (4)					
MNI#4-12		.187 (4.7)					
MNI#4-16		.250 (6.4)					
MNI#4-24		.375 (9.5)					
MNI#5-3	#5 (M3)	.051 (1.3)	.370 (9.4)		.236 (6)	.128 (3.3)	RMS-48
MNI#6-2	#6 (M3.5)	.031 (0.8)	.290 (7.4)		.170 (4.3)	.140 (3.6)	RMS-01
MNI#6-4		.063 (1.6)					
MNI#6-6		.093 (2.4)					
MNI#6-8		.125 (3.2)					
MNI#6-12		.187 (4.7)					
MNI#6-16		.250 (6.4)					
MNI#6-24		.375 (9.5)					
MNI#6-32		.500 (12.7)					RMS-48
MNI#8-2	#8 (M4)	.031 (0.8)	.344 (8.7)	.063 (1.6)	.205 (5.2)	.173 (4.4)	RMS-01
MNI#8-4		.063 (1.6)					
MNI#8-6		.093 (2.4)					
MNI#8-8		.125 (3.2)					
MNI#8-12		.187 (4.7)					
MNI#8-16		.250 (6.4)					
MNI#8-24		.375 (9.5)					RMS-48
MNI#8-32		.500 (12.7)					
*MNI#10-2	#10 (M5)	.031 (0.8)	.399 (10.1)		.260 (6.6)	.200 (5.1)	RMS-01
MNI#10-4		.063 (1.6)					
MNI#10-6		.093 (2.4)					
MNI#10-8		.125 (3.2)					
MNI#10-12		.187 (4.7)					
MNI#10-16		.250 (6.4)					
MNI#10-24		.375 (9.5)					
MNI#10-32		.500 (12.7)					RMS-48
*MNI1/4-2	1/4 (M6)	.031 (0.8)	.513 (13)	.065 (1.7)	.312 (7.9)	.260 (6.6)	RMS-01
*MNI1/4-4		.063 (1.6)					
MNI1/4-6		.093 (2.4)					
MNI1/4-12		.187 (4.7)					
MNI1/4-16		.250 (6.4)					
MNI1/4-24		.375 (9.5)					
MNI1/4-32		.500 (12.7)					
MNI5/16-6	5/16 (M8)	.093 (2.4)	.620 (15.7)	.063 (1.6)	.360 (9.1)	.320 (8.1)	
MNI5/16-12		.187 (4.7)					
MNI5/16-16		.250 (6.4)					
MNI-M2.5-1.3	M2.5	.051 (1.3)	.248 (6.3)	.047 (1.2)	.138 (3.5)	.114 (2.9)	
MNI-M2.5-3.6		.142 (3.6)	.280 (7.1)	.059 (1.5)	.150 (3.8)	.110 (2.8)	
MNIM3-1.0	M3	.039 (1)		.039 (1)		.122 (3.1)	RMS-48
MNIM3-1.3		.051 (1.3)	.347 (8.8)	.047 (1.2)	.236 (6)	.126 (3.2)	RMS-01
MNI M3-2.5		.098 (2.5)	.280 (7.1)	.039 (1)	.150 (3.8)	.122 (3.1)	RMS-48
MNIM3-3.5		.137 (3.5)					RMS-01

*PARTS AVAILABLE BY SPECIAL ORDER ONLY.

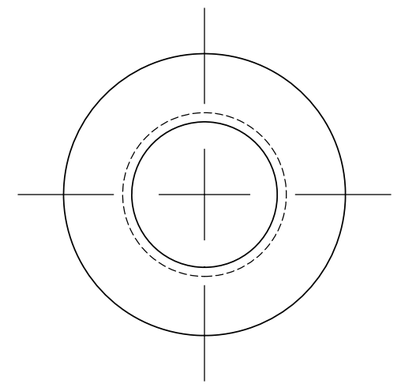

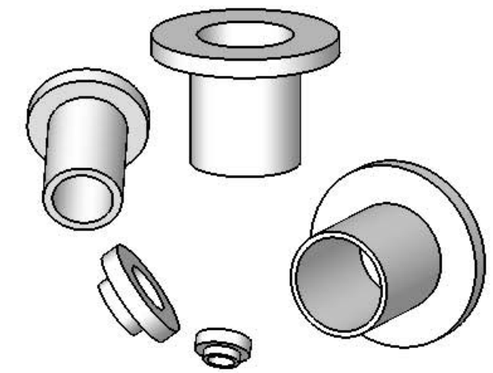

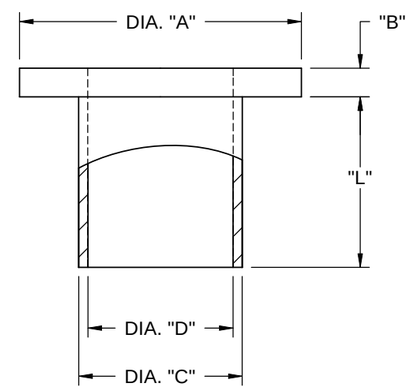

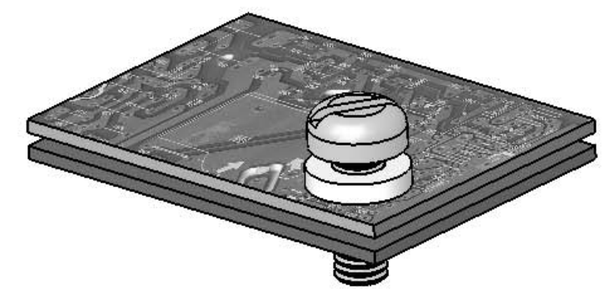

NOTES:
1. MATERIAL: NYLON 6/6 UL 94 V-2
   - NYLON 4/6 UL 94 V-2 (RMS-109),
   AVAILABLE BY SPECIAL ORDER ONLY.
   TO ORDER ADD "-109" TO THE END OF PART NO.
2. COLOR: NATURAL

REV.	DESCRIPTION	ENGR.	DATE
R	SEE CO 200581 FOR CHANGES	SK	09/14/10
Q	SEE CO 200403 FOR CHANGES	SK	07/31/09
P	SEE CO 200276 FOR CHANGES	SK	11/12/08
-	SEE ENGINEERING FOR REV A-O	-	-

TITLE: MOLDED NYLON INSULATORS

DWG IN IN [MM]

CREATED USING SOLIDWORKS

TOLERANCES UNLESS NOTED
.XX=±.010
.XXX=±.005
FRAC.=±1/64
ANG.=±1°

FILE #: MNI | DWN: SM | APP: SM | FINAL

SHEET: 1 OF 1 | SHEET SIZE: B | DT: 10/01/04 | CHKD: SJ

RE: RICHCO, INC.

RICHCO, INC.
ENG@RICHCO-INC.COM
(773) 539-4060

PART # SEE TABLE

PRINT TYPE CA