THIS DRAWING IS UNPUBLISHED. RELEASED FOR PUBLICATION 20
© COPYRIGHT 20 BY TYCO ELECTRONICS CORPORATION, ALL RIGHTS RESERVED.

LOC	DIST
-	-

REVISIONS

P	LTR	DESCRIPTION	DATE	DWN	APVD
	A	RELEASED	01JUN2009	CT	KH

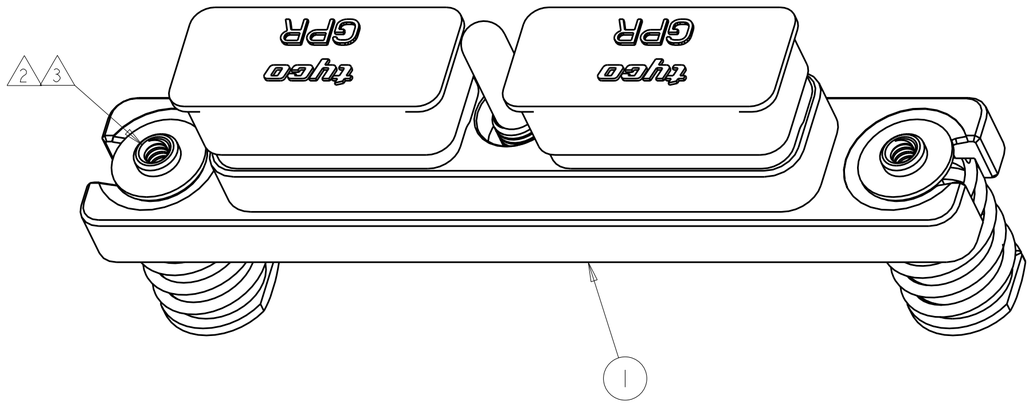

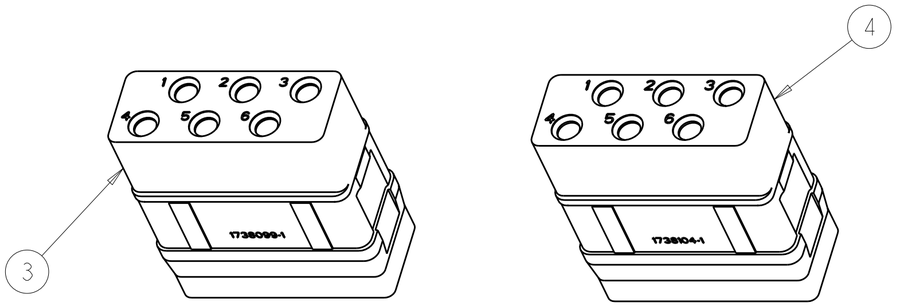

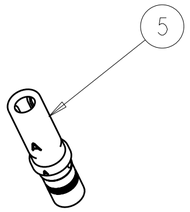

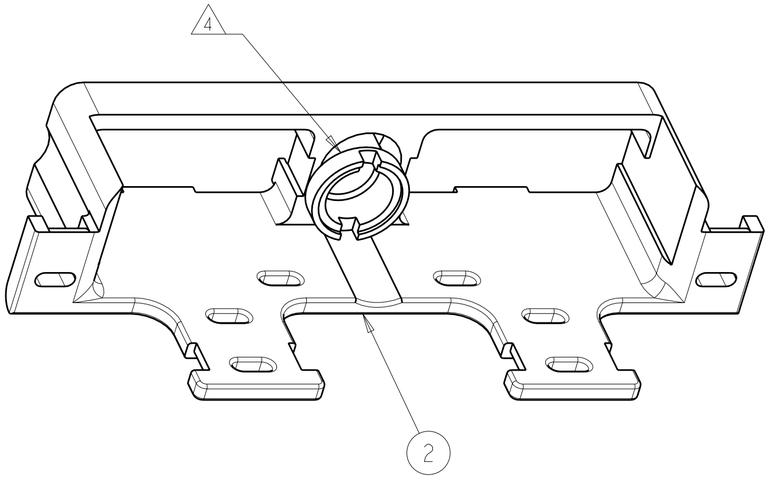

1. SEE INDIVIDUAL CUSTOMER DRAWINGS FOR MATERIALS, FINISHES PANEL CUTOUTS ETC.

2. 6-32 SCREWS ARE REQUIRED FOR PANEL MOUNTING (NOT INCLUDED). SCREW HEAD DIAMETER: 8.5mm MAX RECOMMENDED TORQUE: 1.3 N-m [11.5 in-lb] MIN.

3. 6-32 THREADED HOLES ARE SELF-LOCKING, HAVING THE SPIRALOCK® THREAD FORM. SPIRALOCK® IS A REGISTERED TRADEMARK OF SPIRALOCK CORPORATION.

4. A SPANNER WRENCH TOOL, TE P/N 1738220-1 (WITH 1/4-in. ADAPTER) OR 1738221-1 (WITH T-HANDLE) IS USED TO LOCK THE RETAINING NUT TO THE JACKSCREW OF THE CORRESPONDING GPR CONNECTOR.

5. COMPONENTS ARE SHIPPED IN KIT FORM (UNASSEMBLED).

THIS PRINT IS

PRELIMINARY

UNQUALIFIED PRODUCT
CONTACT PRODUCT ENGINEERING
BEFORE USING THIS PRINT

QTY	PART NO.	DESCRIPTION	ITEM NO.
12	1738018-1	SOCKET CONTACT,SIZE 12,CRIMP	5
1	1738104-1	SOCKET INSERT,ARR 06,KEY B	4
1	1738099-1	SOCKET INSERT,ARR 06,KEY A	3
1	1738313-1	STRAIN RELIEF KIT	2
1	1877070-1	PLUG SHELL ASSY,GAIN	1

THIS DRAWING IS A CONTROLLED DOCUMENT FOR TYCO ELECTRONICS CORPORATION. IT IS SUBJECT TO CHANGE AND THE CONTROLLING ENGINEERING ORGANIZATION SHOULD BE CONTACTED FOR THE LATEST REVISION.

DIMENSIONS: mm

TOLERANCES UNLESS OTHERWISE SPECIFIED:
0 PLC ±-
1 PLC ±0.2
2 PLC ±-
3 PLC ±-
4 PLC ±-
ANGLES ±-

MATERIAL -
FINISH -

DWN C.C.THOMAS 01JUN2009
CHK K.HOGAN 01JUN2009
APVD K.HOGAN 01JUN2009
PRODUCT SPEC -
APPLICATION SPEC -
WEIGHT -

Tyco Electronics
Tyco Electronics
Harrisburg, PA 17105-3608

NAME KIT,GPR PLUG ASSY,GAIN,06/06
-
-

SIZE	CAGE CODE	DRAWING NO	RESTRICTED TO
A2	00779	C-2101196	-

CUSTOMER DRAWING SCALE 2:1 SHEET 1 OF 1 REV A

AMP 1471-9 REV 31MAR2000

Pro/ENGINEER DRAWING