THIS DRAWING IS UNPUBLISHED. RELEASED FOR PUBLICATION -,- .
© COPYRIGHT - By - ALL RIGHTS RESERVED.

LOC	DIST
G	14

REVISIONS

P	LTR	DESCRIPTION	DATE	DWN	APVD
	H1	REVISED PER ECO-11-004820	11MAR11	RK	HMR

AMP WIRE RANGE	Listed	LR7189 Certified
16-14 AWG SOLID OR STRANDED	16-14 AWG SOLID OR STRANDED	16-14 AWG SOLID OR STRANDED

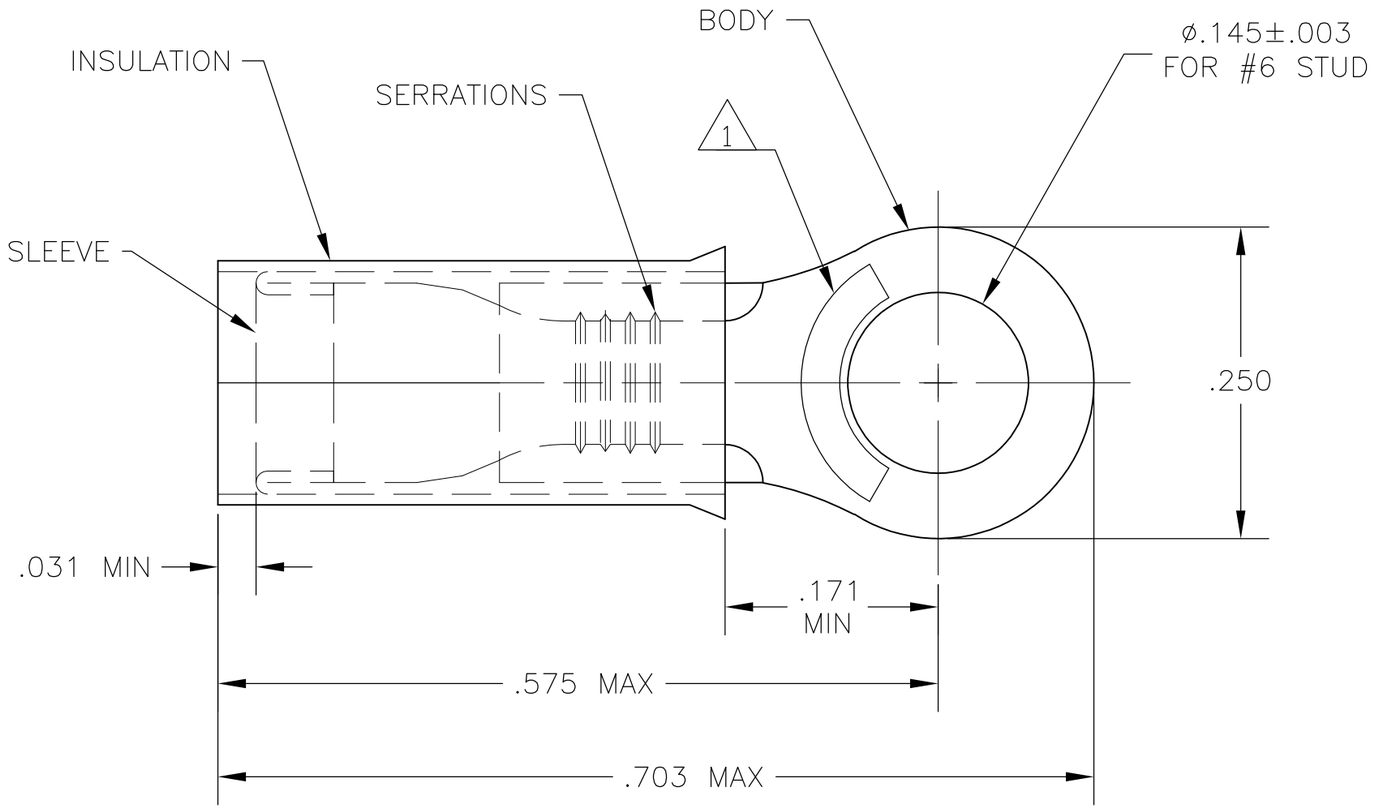

1. STAMP AMP 16-14*, APPROX AS SHOWN. STAMP MAY BE ON TOP OR BOTTOM.
2. TONGUE THICKNESS IS .031±.002
3. FOR .115-.170 WIRE INSULATION DIA
4. MAX RECOMMENDED OPERATING TEMP IS 105°C.
5. 300 VOLT MAX RATING.
6. WIRE CROSS SECTIONAL AREA RANGE 1.04-2.62mm [2,050-5,180 CIR MILS]

QTY	PACKAGING	MATERIAL / FINISH	PART NO
25	LOOSE PIECE, BLS	BODY & SLEEVE: COPPER PER ASTM B152 TIN PL. PER ASTM B-545 INSULATION: NYLON COLOR: BLUE	9-320619-4
5	LOOSE PIECE, BLS		8-320619-4
100	LOOSE PIECE, BOX		8-320619-1
5000	ON TAPE, REEL		2-320619-1
-	LOOSE PIECE		320619

THIS DRAWING IS A CONTROLLED DOCUMENT.

DIMENSIONS: INCHES

TOLERANCES UNLESS OTHERWISE SPECIFIED:

0 PLC	± -
1 PLC	± -
2 PLC	± -
3 PLC	± .008
4 PLC	± -
ANGLES	± 1°

MATERIAL -

FINISH -

DWN jr ruth 19AUG03
CHK T MICHIELUTTI 19AUG03
APVD T MICHIELUTTI 19AUG03
PRODUCT SPEC UL486A
APPLICATION SPEC 114-2157
WEIGHT -

TE Connectivity

NAME WIRE TERMINAL PIDG, RING TONGUE WIRE SIZE: 16-14

SIZE	CAGE CODE	DRAWING NO	RESTRICTED TO
A3	00779	C-320619	-

CUSTOMER DRAWING | SCALE 8:1 | SHEET 1 OF 1 | REV H1