THIS DRAWING IS UNPUBLISHED. VERTRAULICHE UNVEROEFFENTLICHTE ZEICHNUNG
© COPYRIGHT 2014 Tyco Electronics AMP GmbH
RELEASED FOR PUBLICATION 2014
FREI FUER VEROEFFENTLICHUNG
ALL RIGHTS RESERVED. ALLE RECHTE VORBEHALTEN.

MATED WITH: PASSEND ZU:

PROJEKT NR.: PRJ-11-0000004377

REVISIONS / ANDERUNGEN

P	LTR	DESCRIPTION / BESCHREIBUNG	DATE	DWN	APVD
	A	NEW RELEASE	04DEC2014	TJ	PS

NOTES:

1. MATERIAL: ITEM NO. 1: HOUSING - CuZn (BRASS, NICKEL PLATED)
   ITEM NO. 2: CONTACT BODY - PA
   ITEM NO. 3: CONTACT - CuZn (BRASS)
   CONTACT FINISH - AU (GOLD)

2. ALL DIMENSIONS ARE FOR NOMINAL REFERENCE ONLY UNLESS OTHERWISE STATED

TECHNICAL DATA	3-2172070-2	4-2172070-2	5-2172070-2
RATED VOLTAGE	250V	125V	60V
RATED IMPULSE VOLTAGE	2500V	1500V	800V
POLLUTION DEGREE	3	3	3
OVERVOLTAGE CATEGORY	II	II	II
MATERIAL GROUP	III	III	III
RATED CURRENT	4A	4A	2A
VOLUME RESISTIVITY	≤ 3mΩ	≤ 3mΩ	≤ 3mΩ
DEGREE OF PROTECTION	IP68	IP68	IP68
UPPER TEMPERATURE	+85 °C	+85 °C	+85 °C
LOWER TEMPERATURE	-40 °C	+40 °C	+40 °C

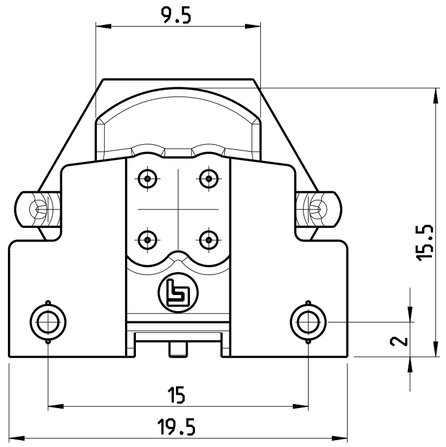

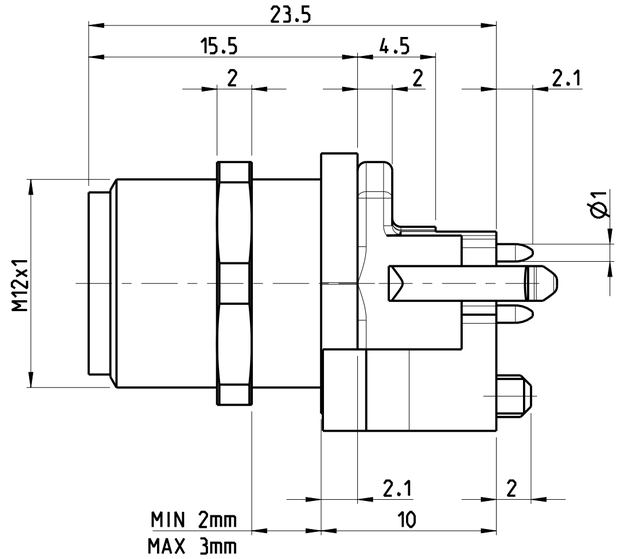

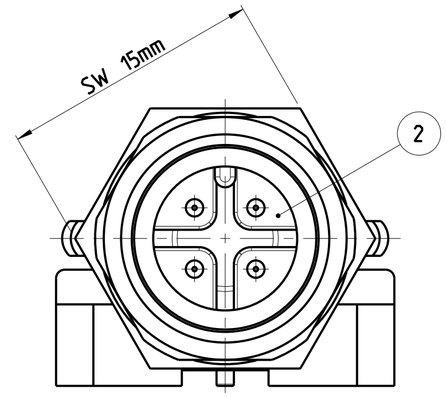

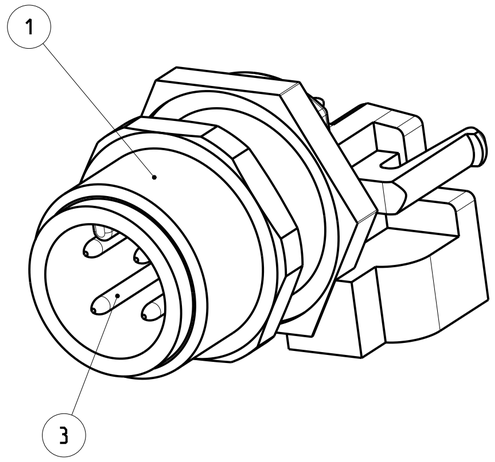

PIN ARRANGEMENT
A-CODING (SCALE 2:1)

3-2172070-2	4-2172070-2	5-2172070-2
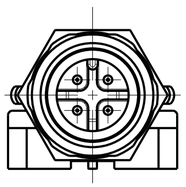	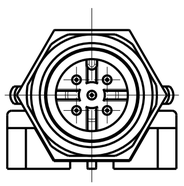	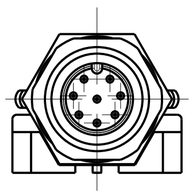

CONDUCTOR LAYOUT

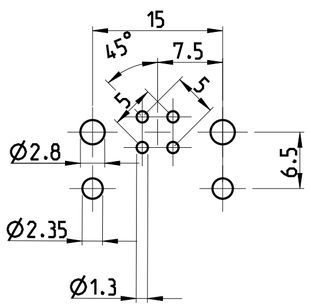

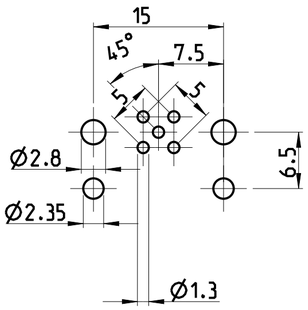

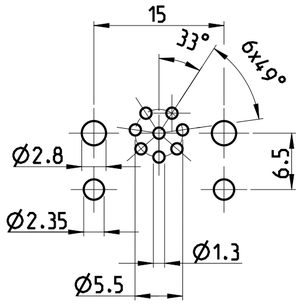

MATERIAL	NUMBER OF POLES	TE-PART-NO.
1	8	5-2172070-2
1	5	4-2172070-2
1	4	3-2172070-2

SIZE ISO 14405 (E)

DIESE ZEICHNUNG IST EIN KONTROLLIERTES DOKUMENT.
BEMASSUNGEN UND TOLERANZEN GEMAESS GPS (ISO STANDARDS).

THIS DRAWING IS A CONTROLLED DOCUMENT.
DIMENSIONING AND TOLERANCING PER GPS (ISO STANDARDS).

DIMENSIONS: MASSEINHEITEN: mm

TOLERANCES UNLESS OTHERWISE SPECIFIED: ALLGEMEINTOLERANZEN
0 PLC ±
1 PLC ±
2 PLC ±
3 PLC ±
4 PLC ±
ANGLES/WINKEL ±
FINISH/OBERFLAECHE/FARBE

MATERIAL: SEE NOTES

SEE NOTES

DWN YASHKUMAR 24 JUL 2014
CHK M. BRUBAKER 24 JUL 2014
APVD M. BRUBAKER 24 JUL 2014

PRODUCT SPEC / PRODUKTSPEZ. 108-19483
APPLICATION SPEC / VERARBEITUNGSSPEZ. 114-32127
WEIGHT / GEWICHT -

Customer Drawing /KUNDENZEICHNUNG

TE Connectivity

NAME: M12 RECEPTACLE, MALE, PCB MOUNT, STRAIGHT, A-CODED

SIZE	CAGE CODE	DRAWING NO / ZEICHNUNGS-NR.	RESTRICTED TO / NUR FUER
A2	00779	C-2172070	-

SCALE / MASSSTAB 4:1 | SHEET / BLATT 1 OF / VON 1 | REV A

1471-9 (3/13)