samtec

TIGER EYE™ DISCRETE

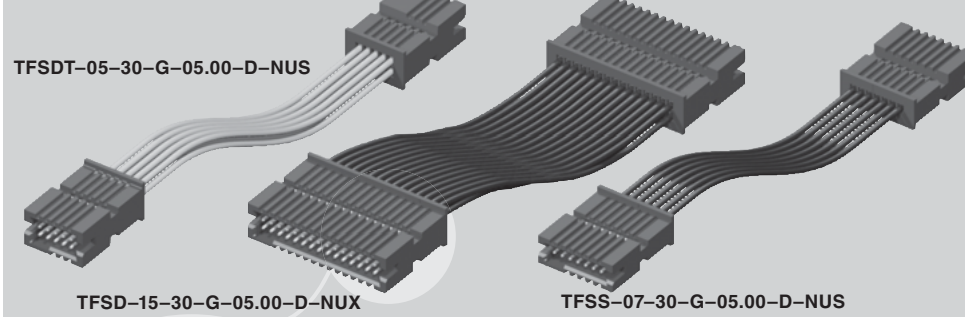

(1,27 mm) .050"

TFSS, TFSST, TFSD, TFSDT SERIES

TIGER EYE™ DISCRETE CABLE ASSEMBLY

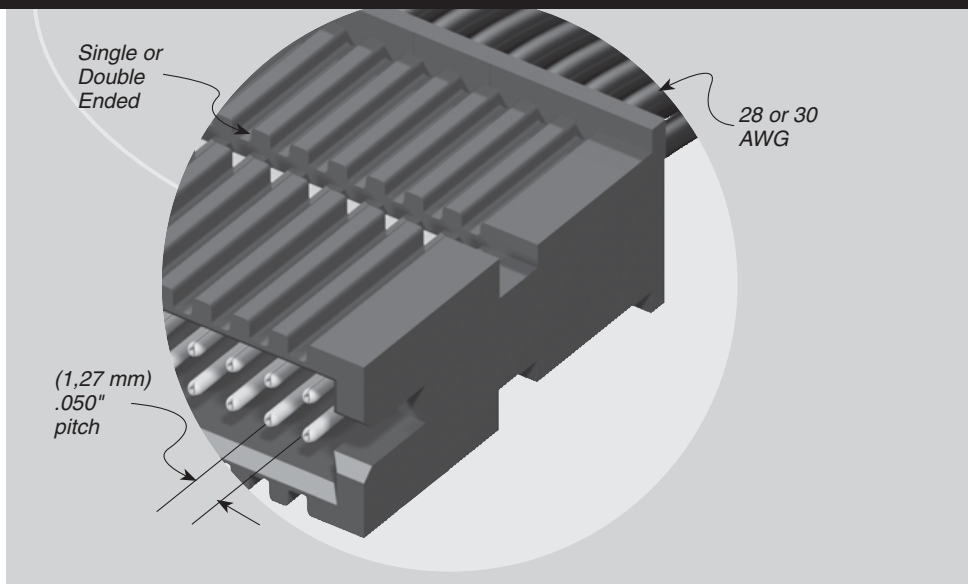

SPECIFICATIONS

For complete specifications see www.samtec.com?TFSS, www.samtec.com?TFSD, www.samtec.com?TFSDT, or www.samtec.com?TFSST

Insulator Material:
Black LCP
Contact Material:
BeCu
Plating:
Au over 50µ" (1,27 µm) Ni
Operating Temp Range:
-10°C to +80°C (PVC)
-40°C to +125°C (*Teflon®)
Wire:
28 or 30 AWG
RoHS Compliant:
Yes

Mates with:
SFM, SFC (–TR requires TFM–WT option), SFML (–XL end option required)

RECOGNITIONS

For complete scope of recognitions see www.samtec.com/quality

FILE NO. E111594

ALSO AVAILABLE (MOQ Required)

- Color coded cable (*Teflon® N/A)
- Other plating options

Contact Samtec.

*DuPont™ Teflon® is a registered trademark of the E.I. du Pont de Nemours and Company or its affiliates.

Note: For wiring option and pin position location information, refer to drawings on web.

Note: Some lengths, styles and options are non-standard, non-returnable.

TYPE STRIP

TFSS = Single Row PVC Cable

TFSST = Single Row *Teflon® Cable

TFSD = Double Row PVC Cable

TFSDT = Double Row *Teflon® Cable

POSITIONS PER ROW

–03, –04, –05, –07, –10, –15, –20, –25, –40, –50 (Standard sizes)

WIRE GAUGE

–30 = 30 AWG

–28 = 28 AWG

PLATING OPTION

–G = 10µ" (0,25 µm) Gold on contact

ASSEMBLED LENGTH

–"XX.XX" = Assembled Length in Inches (76,20 mm) 03.00" min. for –S end option (82,60 mm) 03.25" min. for –D end option

END OPTION

–S = Single Ended

–D = Double Ended

–T = Transfer End Terminal on End 1 Socket on End 2 (See chart for End 2 option)

–TF* = Transfer End with Friction Lock

–TR = Transfer End with Retention Latch (TFM –WT option required for mating)

*–05 & –07 positions not available. TFSD, TFSDT only

END 2 OPTION

Requires –D, –TF or –TR (End 1 Notch Down).

–NUS = Notch up, straight (Pin 1 to Pin 2)

–NDS = Notch down, straight (Pin 1 to Pin N-1)

–NUX = Notch up, crossed (Pin 1 to Pin 1) (TFSD/TFSDT only)

–NDX = Notch down, crossed (Pin 1 to Pin N) (TFSD/TFSDT only)

END 2	END OPTION
T-NUS	Pin 1 to Pin N
T-NDS	Pin 1 to Pin 1
T-NUX	Pin 1 and Pin N-1
T-NDX	Pin 1 to Pin 2

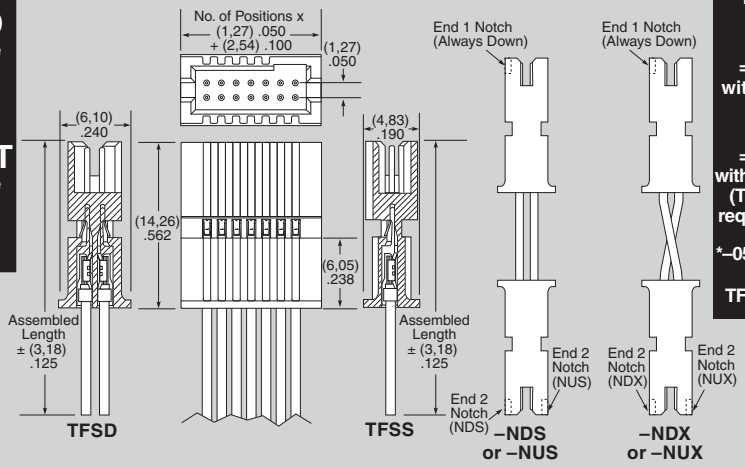

Due to technical progress, all designs, specifications and components are subject to change without notice.

SAMTEC USA • Tel: +1-800-SAMTEC-9 or +1-812-944-6733 **SAMTEC NORTHERN CALIFORNIA** • Tel: +1-408-395-5900 **SAMTEC SOUTHERN CALIFORNIA** • Tel: +1-800-726-8329
SAMTEC SOUTH AMERICA • Tel: +55 31 3786 3227 **SAMTEC UNITED KINGDOM** • Tel: +44 01236 739292 **SAMTEC GERMANY** • Tel: +49 (0) 89 / 89460-0
SAMTEC FRANCE • Tel: +33 1 60 95 06 60 **SAMTEC ITALY** • Tel: +39 039 6890337 **SAMTEC NORDIC/BALTIC** • Tel: +46 8 4477280 **SAMTEC BENELUX** • Tel: +44 01236 739292
SAMTEC ISRAEL • Tel: +972 3 7526600 **SAMTEC INDIA** • Tel: +91 80 3272 1612 **SAMTEC ANZ** • Tel: +613 9580 0683 **SAMTEC SINGAPORE** • Tel: +65 6745 5955 **SAMTEC JAPAN** • Tel: +81 45 475 1385
SAMTEC SHANGHAI • Tel: +86 21 6083 3766 **SAMTEC SHENZHEN** • Tel: +86 755 83776780 **SAMTEC TAIWAN** • Tel: +886 2 2735 6109 **SAMTEC HONG KONG** • Tel: +852 26904858 **SAMTEC KOREA** • Tel: +82 31 717 5685