Status: **Active**

Product Quick Links

Specifications
Product Options
Documentation & Tools
Technical Support
Contact Sales

LDS6201
2-Channel Capacitive Touch Controller

The LDS6201 PureTouch® capacitive touch sensor IC is a highly accurate solution for capacitive touch sensor applications, supporting a wide variety of possible touch input types including buttons, scroll wheels, and sliders. The device contains 2 capacitive sensor input pins and supports enhanced functionality including proximity-sensing and power-on touch detection.

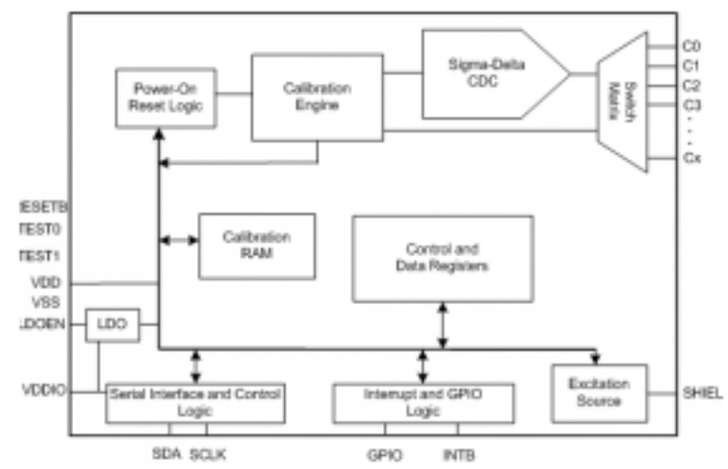

Features

- 2 touch sensor channels
- 2ms update rate per active sensor
- Built-in Slider/Scroll Support
- Configurable hysteresis and debounce
- 1.65-5.5v supply voltage
- <125uW (full power), <50uW (low power)
- I2C compatible serial I/F with VDDIO
- Power on touch detection
- Enhanced proximity sensing
- TQFN and SOIC packages available

Product Specification

TOUCH VOLTAGE (V)	TOUCH SENSORS (#)	SCAN RATE (MS)	AUTO CALIBRATION	HYST / DEBOUNCE CONFIG	ENH PROX SENSE	POWER-ON TOUCH DETECT	INTERFACE	I/O VOLTAGE (V)	GPIOS (#)	DCM OUTPUTS (#)	PKG. TYPE
1.65 - 5.50	2	2.00 - 4.00	Y	Y	Y	Y	I2C	1.65 - 5.50	1		SOIC, VFQFPN

Product Options

ORDERABLE PART ID	PKG. CODE	PKG. TYPE	LEAD COUNT (#)	TEMP. GRADE	PB (LEAD) FREE	ORDER
LDS6201NTGI8	NTG16	VFQFPN	16	I	Y	Check Inventory
LDS6201DCGI8	DCG16	SOIC	16	I	Y	Check Inventory

Documents

	TITLE	TYPE	FORMAT	FILE SIZE	DATE
🔒	LDS62XX Errata	Errata	PDF	39 KB	01/18/2011
	IDT Touch 6200 Family Flyer	Flyer	PDF	602 KB	01/24/2011
	IDT Pure Touch Product Selector Guide	Misc	PDF	19 KB	01/27/2011

GET TECHNICAL SUPPORT ▶ CONTACT SALES OFFICE ▶

© 2012 Integrated Device Technology, Inc. Privacy Trademarks Terms of Use Sustainability