REV.	DESCRIPTION	DATE
A	RELEASE	2012.11.12

RoHS

NOTES:
Insulator Material: PBT, UL 94V-0
Contact Plating: TIN, 80-100μ"
Contact Material: Brass

Current Rating : 1A AC,DC
Contact Resistance: 20MΩ Max.
Dielectric Withstanding: AC 500V
Insulator Resistance: 1000MΩ Min.
Operating Temp.: -40°C~+105°C

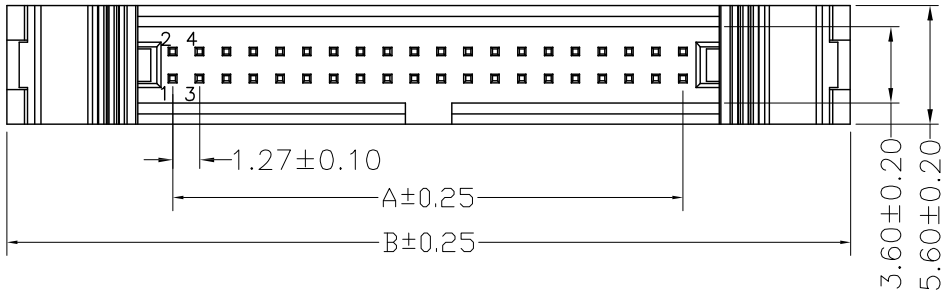

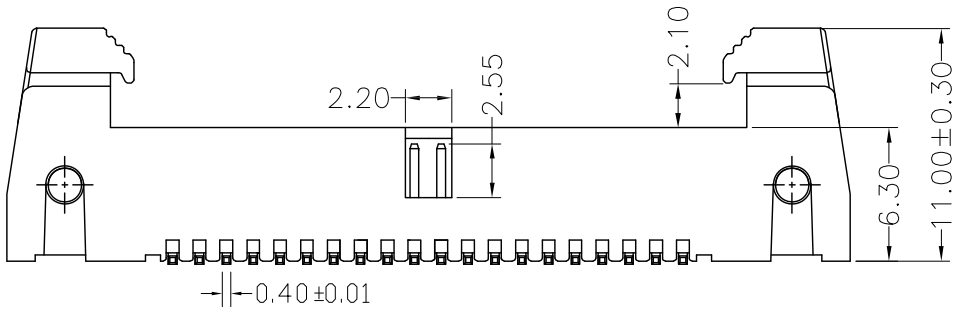

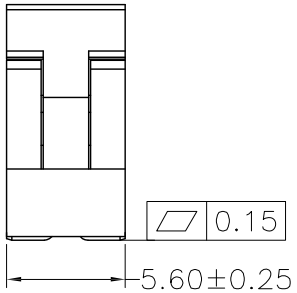

NUMBER OF POSITIONS	DIMENSIONS	
	A	B
06	2.54	18.31
08	3.81	19.58
10	5.08	20.85
12	6.35	22.12
14	7.62	23.39
16	8.89	24.66
18	10.16	25.93
20	11.42	27.20
24	13.97	29.74
26	15.24	31.01
30	17.78	33.55
34	20.32	36.09
40	24.13	39.90
50	30.48	46.25
60	36.83	52.60
64	39.37	55.14

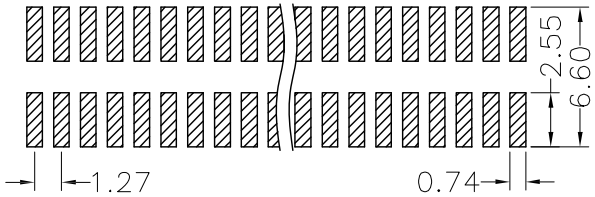

P.C.B LAYOUT

UNLESS TOLERANCE			
GENERAL		ANGLE	
X.	± 0.30	X.°	± 3.0°
.X	± 0.20	.X°	± 2.0°
.XX	± 0.15	.XX°	± 1.0°
.XXX	± 0.08	.XXX°	± 0.5°

DRAW BY	
DESIGN BY	
CHECK BY	
APPROVE BY	

SCALE	SHEET	UNIT
1:1	1/1	MM

CnC Tech,LLC

3210-XX-003-12-99

DRW NO: REV: A