SD-84915-0065

LENGTH CHART (C)	
PART NO.	LENGTH
849150065	4M [13' 1 1/2"]
849150066	5M [16' 4 7/8"]
849150067	1M [3' 3 3/8"]
849150079	2M [6' 6 3/4"]

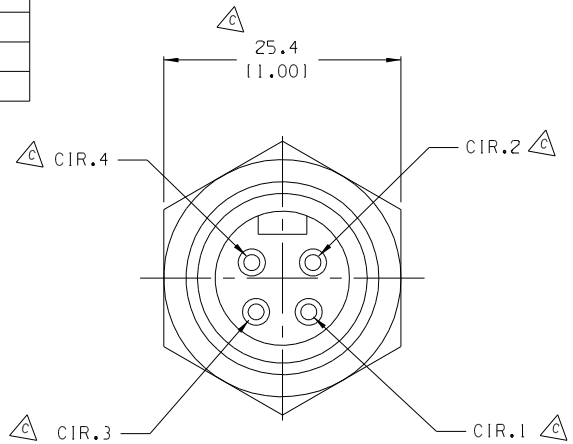

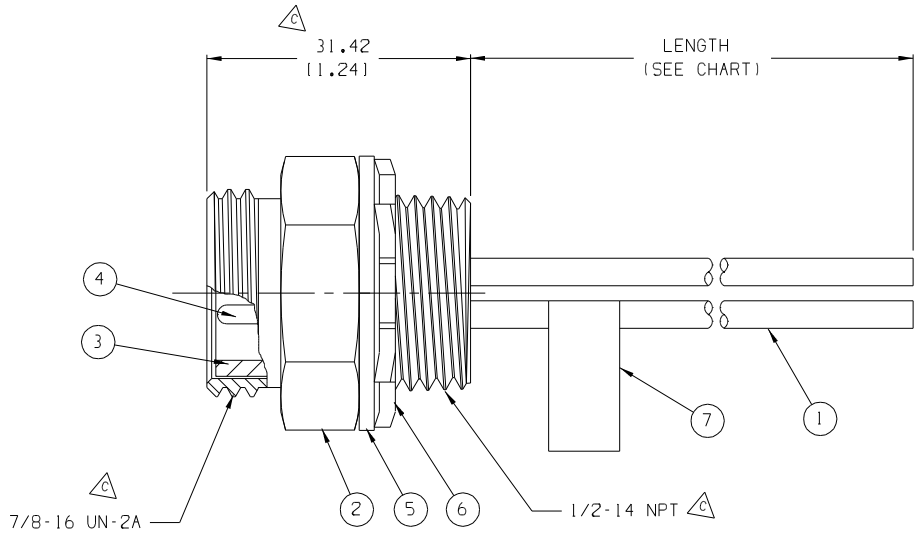

P1

1	BROWN
2	WHITE
3	BLUE
4	BLACK

(C) WIRING DIAGRAM

(C) NOTES:

1. MATERIAL: SEE TABLE
2. FINISHES: SEE TABLE
3. PRODUCT SPECIFICATION: NOT REQUIRED
4. PACKAGING: NOT REQUIRED
5. MATES WITH: MINI-C FEMALE (EURO), 4/C, 16 AWG
6. ELECTRICAL SPECIFICATIONS
   VOLTAGE RATING: 600V
   CURRENT RATING: 13 AMPS

ITEM	QTY.	DESCRIPTION	MATERIAL	FINISH
7	1	LABEL	MYLAR	BLACK/CHROME
6	1	LOCKNUT, 1/2-14 NPT	STEEL	ZINC PLATED
5	1	GASKET	NEOPRENE	BLACK
4	4	CONTACT PIN	CU ALLOY	GOLD PLATED
3	1	INSERT-PIN, 4/C	PVC	YELLOW
2	1	RECEPTACLE SHELL	ALUMINUM	BLACK ANODIZED
1	4	WIRE, 16 AWG	PVC JACKET	AS NOTED

EC NO. ECO 11572
DRWN: RS 07-09-04
CH'K:
APPR:
DESCRIPTION
C
REV

QUALITY SYMBOLS
MAJOR
CRITICAL (C)
SPC (S)

GENERAL TOLERANCES: (UNLESS SPECIFIED)

	mm	INCH
4 PLACES		±.0015
3 PLACES	±.038	±.005
2 PLACES	±.13	±.01
1 PLACE	±.3	
ANGULAR:	±2°	

DRAFT WHERE APPLICABLE MUST REMAIN WITHIN DIMENSIONS

SCALE 2:1
DESIGN UNITS ☐ mm ☒ INCH
THIRD ANGLE PROJECTION
DRAWN BY & DATE GF 2-11-00
CHECKED BY & DATE R.STONE 02-04-02
APPROVED BY & DATE P.WALTZ 02-05-02
CAD FILENAME SD-84915-0065

PROJECT NO. -
DIMENSIONS: ☒ mm/INCH ☐ INCH/mm ☐ mm ONLY
SHT -
REV -
REVISE ON CAD ONLY

TITLE: MINI-C, RECEPTACLE, MALE, 4 POLE, 16 AWG., EURO

MOLEX INCORPORATED

MATERIAL NO. SEE CHART
DRAWING NO. SD-84915-0065
SHEET NO. 1 OF 1
SIZE B

THIS DRAWING CONTAINS INFORMATION THAT IS PROPRIETARY TO MOLEX INCORPORATED AND SHOULD NOT BE USED WITHOUT WRITTEN PERMISSION.