REVISIONS			
REV	DESCRIPTION	DATE	APPROVED
05_1	SEE ECN 81-0047	SB 1-19-81	RC
05_2	SEE ECN 80-0084	P.M. 4-8-81	TS
06_0	MAJ. CHANGE PER ECN 85-0032	L.ROSS 1-15-85	RR 1-15-85
06_1	REDRAWN ON CAD PER ECN 88-0678	M.Y. 3-31-89	KCM
B	PER EC 0U20-0694-00	03OCT01	C. Hoang 03OCT01

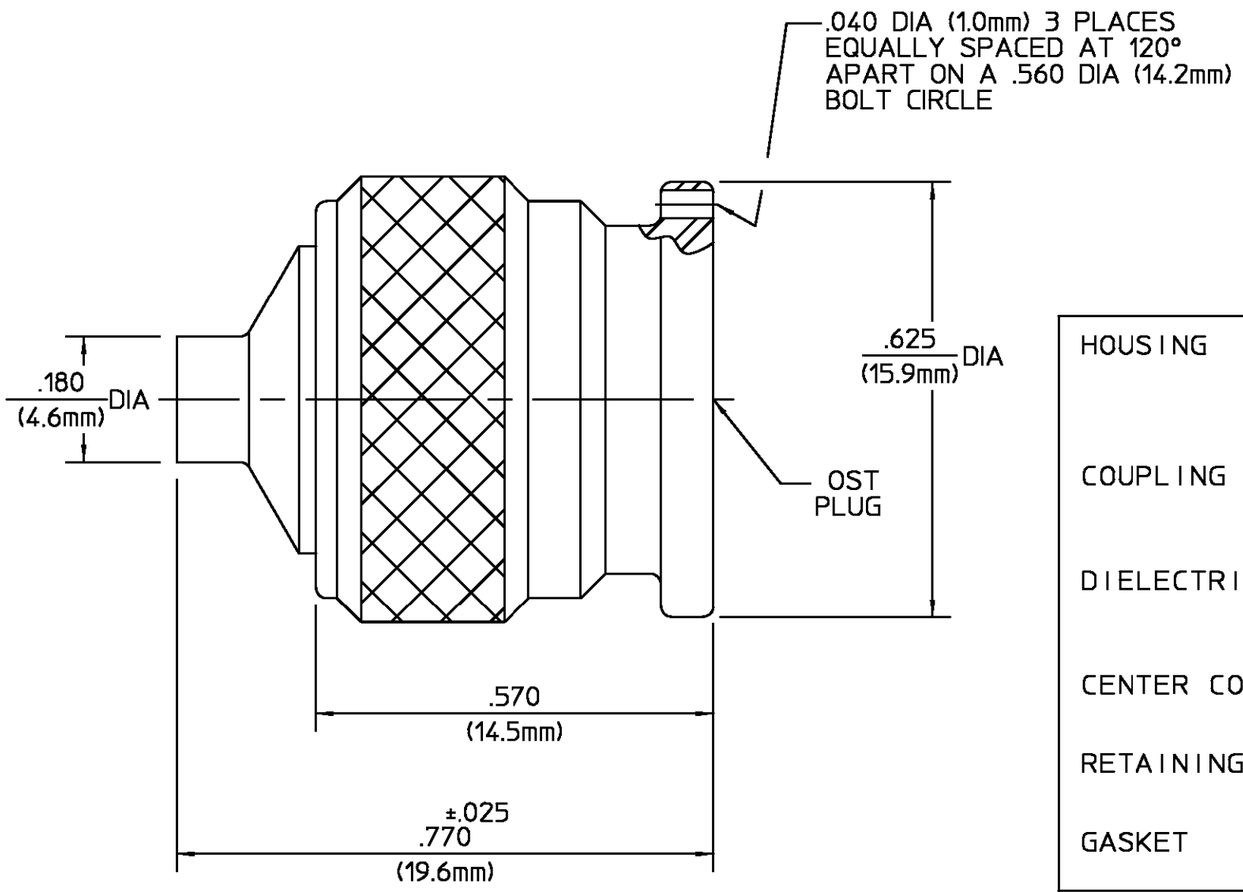

COMPONENT	MATERIAL	FINISH
HOUSING	STAINLESS STEEL PER ASTM-A484 AND ASTM-A582, TYPE 303	GOLD PLATE PER MIL-G-45204 OVER NICKEL PLATE PER QQ-N-290
COUPLING NUT	STAINLESS STEEL PER ASTM-A484 AND ASTM-A582, TYPE 303	PASSIVATE PER ASTM-A380
DIELECTRIC	TFE FLUOROCARBON PER MIL-P-19468 AND FED SPEC L-P-403	N/A
CENTER CONTACT	BRASS PER ASTM-B-16, HALF HARD	GOLD PLATE PER MIL-G-45204
RETAINING RING	BERYLLIUM COPPER PER QQ-C-533	N/A
GASKET	SILICONE RUBBER PER ZZ-R-765	N/A

NOTES:

1. DESIGNED FOR USE WITH .141 SEMI-RIGID CABLE

CABLE ENTRY DIAMETER MINIMUM	
HOUSING	.145
CONTACT	.040

UNLESS OTHERWISE SPECIFIED DIMENSIONS ARE IN INCHES
TOLERANCE ON
FRAC. ± 1/64 DEC. ±.005 ANGLES ± 1°

These drawings and specifications are the property of Omni Spectra Incorporated and shall not be reproduced or copied or used in whole or in part as the basis for the manufacture or sale of item(s) without written permission.

DRAWN BY J.L. DATE 9-1-67
CHECKED BY REA 9-1-67
APP'D BY JK 9-5-67

USE ASS'Y PROCEDURE

NO. A.P. 408-08201 (31-001)

AMP Incorporated
140 Fourth Avenue
Waltham, MA 02451-7599

TITLE OST CABLE PLUG DIRECT SOLDER

SIZE	CODE IDENT NO.		REV
B	26805	3101-7941-00	06_1
SCALE 5:1			SHEET 1 OF 1

CUSTOMER DRAWING

AMP PART # 1057631-1
SHEET 1 OF 1 REV B