THIS DRAWING IS UNPUBLISHED. RELEASED FOR PUBLICATION -,- .
© COPYRIGHT - By - ALL RIGHTS RESERVED.

LOC	DIST
GP	00

REVISIONS

P	LTR	DESCRIPTION	DATE	DWN	APVD
	C	REVISED PER ECO-12-000090	26JAN2012	CJV	SLB

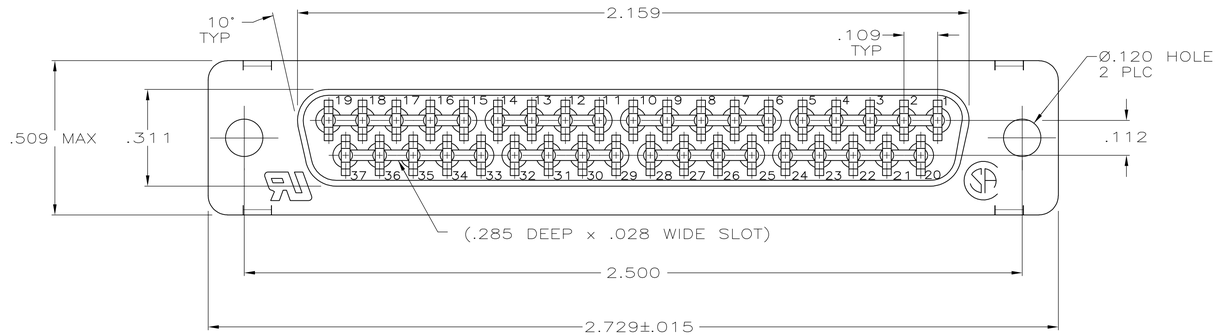

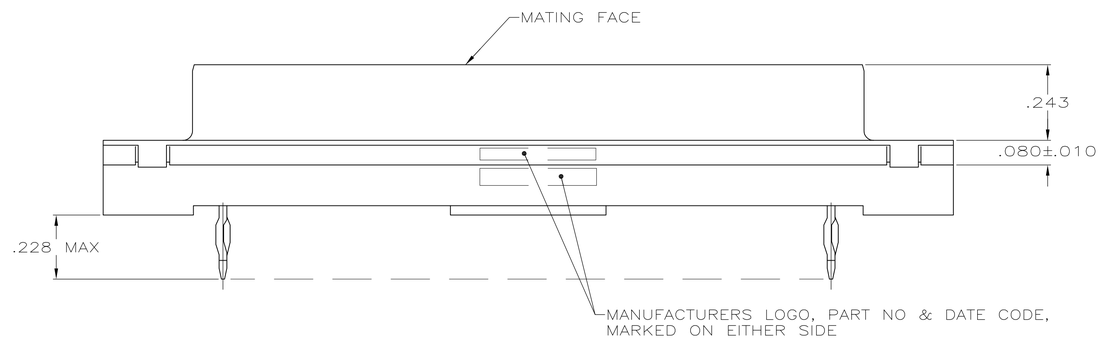

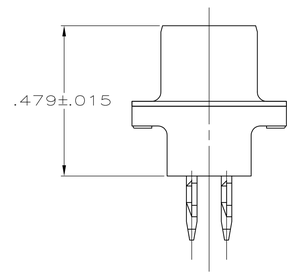

1. FOR USE WITH .093 MINIMUM THICK PRINTED CIRCUIT BOARD. REFER TO APPLICATION SPECIFICATION FOR PRINTED CIRCUIT BOARD LAYOUT DIMENSIONS AND FINISH RECOMMENDATIONS.

2. SHELL: .0002 MIN BRIGHT TIN OVER .000100 MIN COPPER.

3. HOUSING:
FLAME RETARDANT,UL 94V-0 RATED, THERMOPLASTIC; COLOR: BLACK.
SHELL: CARBON STEEL
CONTACTS: COPPER ALLOY

4. 0.76 MICRO METERS [.000030] MINIMUM GOLD IN MATING AREA.
2.54 MICRO METERS [.000100] MINIMUM TIN ON COMPLIANT PIN.
ALL OVER 1.27 MICRO METERS [.000050] MINIMUM NICKEL.
OR
GOLD FLASH OVER PALLADIUM NICKEL.
0.76 MICRO METERS [.000030] MINIMUM TOTAL IN MATING AREA.
2.54 MICRO METERS [.000100] MINIMUM TIN ON COMPLIANT PIN.
ALL OVER 1.27 MICRO METERS [.000050] MINIMUM NICKEL.

COPYRIGHT 2005
TYCO ELECTRONICS CORP
ALL RIGHTS RESERVED

5747713-2
PART NO

THIS DRAWING IS A CONTROLLED DOCUMENT.

DIMENSIONS: INCHES

TOLERANCES UNLESS OTHERWISE SPECIFIED:
0 PLC ± -
1 PLC ± -
2 PLC ± -
3 PLC ± .005
4 PLC ± -
ANGLES ± 2°

MATERIAL 3
FINISH 2 4

DWN A. FERNANDEZ-DOCK5 03-31-05
CHK G. BOLASH 03-31-05
APVD M. WALMSLEY 03-31-05
PRODUCT SPEC 108-40014
APPLICATION SPEC 114-40026 1
WEIGHT -

TE Connectivity

NAME RCPT ASSY, SIZE 4, 37 POSN, AMPLIMITE HD-20, MDM PROFILE, W/ ACTION PIN CONT & METAL SHELL

SIZE	CAGE CODE	DRAWING NO	RESTRICTED TO
A1	00779	C-5747713	-

CUSTOMER DRAWING | SCALE 4:1 | SHEET 1 OF 1 | REV C

4805 (3/11)