SIEMENS

Industrial Controls

Safety Engineering

SIRIUS 3SK1 Safety Relays

Manual

Edition 04/2013

Answers for industry.

SIEMENS

Industrial Controls

Safety engineering 3SK1 safety relays

Manual

Introduction 1

Product-specific safety information 2

Product overview for 3SK1 3

Safety systems - General information 4

3SK1 devices 5

System configuration 6

Circuit diagrams 7

Mounting 8

Connection 9

Configuration / operation 10

Commissioning 11

Display and diagnostics 12

Technical data 13

Dimension drawings 14

Accessories 15

Appendix A

04/2013

A5E02526190021A/RS-AA/01

Legal information

Warning notice system

This manual contains notices you have to observe in order to ensure your personal safety, as well as to prevent damage to property. The notices referring to your personal safety are highlighted in the manual by a safety alert symbol, notices referring only to property damage have no safety alert symbol. These notices shown below are graded according to the degree of danger.

⚠ DANGER
indicates that death or severe personal injury **will** result if proper precautions are not taken.

⚠ WARNING
indicates that death or severe personal injury **may** result if proper precautions are not taken.

⚠ CAUTION
indicates that minor personal injury can result if proper precautions are not taken.

NOTICE
indicates that property damage can result if proper precautions are not taken.

If more than one degree of danger is present, the warning notice representing the highest degree of danger will be used. A notice warning of injury to persons with a safety alert symbol may also include a warning relating to property damage.

Qualified Personnel

The product/system described in this documentation may be operated only by **personnel qualified** for the specific task in accordance with the relevant documentation, in particular its warning notices and safety instructions. Qualified personnel are those who, based on their training and experience, are capable of identifying risks and avoiding potential hazards when working with these products/systems.

Proper use of Siemens products

Note the following:

⚠ WARNING
Siemens products may only be used for the applications described in the catalog and in the relevant technical documentation. If products and components from other manufacturers are used, these must be recommended or approved by Siemens. Proper transport, storage, installation, assembly, commissioning, operation and maintenance are required to ensure that the products operate safely and without any problems. The permissible ambient conditions must be complied with. The information in the relevant documentation must be observed.

Trademarks

All names identified by ® are registered trademarks of Siemens AG. The remaining trademarks in this publication may be trademarks whose use by third parties for their own purposes could violate the rights of the owner.

Disclaimer of Liability

We have reviewed the contents of this publication to ensure consistency with the hardware and software described. Since variance cannot be precluded entirely, we cannot guarantee full consistency. However, the information in this publication is reviewed regularly and any necessary corrections are included in subsequent editions.

Siemens AG
Industry Sector
Postfach 48 48
90026 NÜRNBERG
GERMANY

Order number: 3ZX1012-0SK11-0AC0
Ⓟ 04/2013 Technical data subject to change

Copyright © Siemens AG 2013.
All rights reserved

Table of contents

1 Introduction 11
1.1 User responsibility for system design and function 11
1.2 Required basic knowledge 11
1.3 Validity range 11
1.4 Definitions 11
1.5 DataMatrix code 12
1.6 Correction sheet 13
2 Product-specific safety information 15
2.1 General safety notes 15
2.2 Safety information for hazardous areas 17
2.3 Intended use 17
2.4 Current information about operational safety 18
2.5 Declaration of conformity 18
3 Product overview for 3SK1 19
3.1 Overview 19
3.2 Overview of components and accessory parts 22
3.3 Functional scope of the 3SK1 basic units 23
3.4 Introduction 24
3.5 3SK1 system 25
3.5.1 Standard 25
3.5.1.1 Typical system configuration 25
3.5.2 Advanced 26
3.5.2.1 Typical system configuration 26
4 Safety systems - General information 29
4.1 What is safety? 29
4.2 Safety function 29
4.3 Basic terminology 31
4.3.1 Redundancy/single-channel and two-channel 31
4.3.2 Cross-circuit detection 32
4.3.3 Enabling circuit 32
4.3.4 Signaling circuit 33
4.3.5 Feedback circuit 33
4.3.6 Stop categories 33
4.3.7 Automatic start 34
4.3.8 Manual start 34

4.3.9 Monitored start ... 35
4.3.10 Two-hand operation/synchronism ... 36
4.3.11 Cascading ... 36
4.3.12 Startup testing ... 37
4.3.13 Connection of actuators ... 37
4.3.14 Series connection of sensors ... 40

5 3SK1 devices ... 43

5.1 3SK1 standard ... 43
5.1.1 General information ... 43
5.1.2 Applications ... 43
5.1.3 3SK1111 Standard basic unit instantaneous (with relay outputs) ... 44
5.1.3.1 General information ... 44
5.1.3.2 Function description ... 44
5.1.3.3 Design ... 45
5.1.3.4 Terminal assignment ... 46
5.1.3.5 Inputs ... 46
5.1.3.6 Outputs ... 47
5.1.3.7 Display of the operating state ... 47
5.1.3.8 Function setting ... 47
5.1.4 3SK1112 Standard basic unit instantaneous (with solid-state outputs) ... 50
5.1.4.1 General information ... 50
5.1.4.2 Function description ... 50
5.1.4.3 Design ... 51
5.1.4.4 Terminal assignment ... 52
5.1.4.5 Inputs ... 52
5.1.4.6 Outputs ... 53
5.1.4.7 Display of the operating state ... 53
5.1.4.8 Function setting ... 54

5.2 3SK1 Advanced ... 56
5.2.1 General information ... 56
5.2.2 Applications ... 56
5.2.3 General device features ... 57
5.2.4 Function description ... 57
5.2.5 Functions ... 58
5.2.6 3SK1121 Advanced basic unit instantaneous (with relay outputs) ... 60
5.2.6.1 Device features ... 60
5.2.6.2 Function description ... 60
5.2.6.3 Design ... 61
5.2.6.4 Terminal assignment ... 62
5.2.7 3SK1121 Advanced basic unit time-delayed (with relay outputs) ... 63
5.2.7.1 Device features ... 63
5.2.7.2 Design ... 64
5.2.7.3 Terminal assignment ... 65
5.2.8 3SK1122 Advanced basic unit instantaneous (with solid-state outputs) ... 67
5.2.8.1 Device features ... 67
5.2.8.2 Design ... 68
5.2.8.3 Terminal assignment ... 69
5.2.9 3SK1122 Advanced basic unit time-delayed (with solid-state outputs) ... 71
5.2.9.1 Device features ... 71
5.2.9.2 Design ... 72
5.2.9.3 Terminal assignment ... 73

5.2.10 3SK1120 Advanced basic unit instantaneous (with solid-state outputs) 75
5.2.10.1 Device features 75
5.2.10.2 Design 76
5.2.10.3 Terminal assignment 77

5.3 3SK1 output expansions 78
5.3.1 Applications 78
5.3.2 Function description 78
5.3.3 Display of the operating state 79
5.3.4 Function setting 79
5.3.5 Output expansion 3SK1211 80
5.3.5.1 Device features 80
5.3.5.2 Design of 3SK1211-.B..0 81
5.3.5.3 Design of 3SK1211-.BB40 82
5.3.5.4 Terminal assignment 83
5.3.6 Output expansion 3SK1213 84
5.3.6.1 Device features 84
5.3.6.2 Design of 3SK1213-.AB40 85
5.3.6.3 Design of 3SK1213-.A.20 86
5.3.6.4 Terminal assignment 86

5.4 3SK1 input expansions 87
5.4.1 Input expansion 3SK1220 87
5.4.1.1 Device features 87
5.4.1.2 Applications 87
5.4.1.3 Design 88
5.4.1.4 Terminal assignment 88
5.4.1.5 Display of the operating state 89
5.4.1.6 Function setting 89
5.4.2 Power supply 3SK1230 91
5.4.2.1 Device features 91
5.4.2.2 Applications 91
5.4.2.3 Design 92
5.4.2.4 Terminal assignment 93
5.4.2.5 Display of the operating state 93

6 System configuration 95

6.1 General information 95
6.1.1 General notes on the Standard system 95
6.1.2 General information on the Advanced system 95
6.1.3 Maximum system configuration 96

6.2 3ZY12 device connector 98
6.2.1 Device features 98
6.2.2 Applications 100

6.3 System configuration rules 100

7 Circuit diagrams 103

7.1 Internal circuit diagrams 103
7.1.1 Internal circuit diagrams for 3SK1 Standard basic units 103
7.1.2 Internal circuit diagrams for 3SK1 Advanced basic units 105
7.1.3 Internal circuit diagrams for expansion units 108

7.2 Typical circuits 111

7.2.1 Sensor wiring ... 111
7.2.2 Typical circuits ... 113

8 Mounting ... 123

8.1 Warning notices ... 123
8.2 Terminal coding ... 124
8.3 Mounting the devices on a level surface ... 125
8.4 Disassembling devices from a level surface ... 127
8.5 Mounting the 22.5 mm/17.5 mm device on a standard mounting rail ... 129
8.6 Mounting the 90 mm devices on a standard mounting rail ... 130
8.7 Removing devices from a standard mounting rail ... 131
8.8 Mounting 22.5 mm/17.5 mm devices with device connectors on a standard mounting rail ... 132
8.9 Removing 22.5 mm/17.5 mm devices with device connectors from a standard mounting rail ... 135
8.10 Mounting 90 mm devices with device connectors on a standard mounting rail ... 138
8.11 Removing 90 mm devices with device connectors from a standard mounting rail ... 141
8.12 Mounting 22.5 mm/17.5 mm devices with device connectors on the wall ... 144
8.13 Removing 22.5 mm/17.5 mm devices with device connectors from the wall ... 148
8.14 Mounting 90 mm devices with device connectors on the wall ... 151
8.15 Removing 90 mm devices with device connectors from wall ... 155
8.16 Mounting the sealable cover ... 158

9 Connection ... 159

9.1 22.5 mm/17.5 mm devices ... 159
9.1.1 Terminal assignment ... 159
9.1.2 Connection data for terminals ... 161
9.1.3 Connecting the screw-type terminals ... 162
9.1.4 Disconnecting the screw-type terminals ... 163
9.1.5 Connecting the push-in terminals ... 164
9.1.6 Disconnecting the push-in terminals ... 166
9.1.7 Attaching the terminals ... 167
9.1.8 Disconnecting ... 168

9.2 Devices 90 mm ... 170
9.2.1 Opening the terminal cover ... 170
9.2.2 Connection data for terminals ... 171
9.2.3 Connecting terminals ... 172
9.2.4 Mounting terminals ... 174
9.2.5 Disconnecting ... 175

9.3 Device replacement ... 177

10 Configuration / operation ... 179

10.1 Procedure for configuration ... 179
10.2 Explanation of the device's functions ... 180

10.3 Modes 183
10.4 Response times 184
10.4.1 Response times 184
11 Commissioning 185
12 Display and diagnostics 187
12.1 LED display 187
12.2 Power-up 189
12.3 Error statuses 189
12.4 Diagnostics 189
13 Technical data 193
13.1 General technical data 193
13.2 Basic units 197
13.2.1 Standard 197
13.2.1.1 Technical data for 3SK1111 Standard relay basic unit 197
13.2.1.2 Technical data for 3SK1112 Standard solid-state basic unit 202
13.2.2 Advanced 206
13.2.2.1 Technical data for 3SK1120 Advanced solid-state basic unit 206
13.2.2.2 Technical data for 3SK1121 Advanced relay instantaneous basic unit 210
13.2.2.3 Technical data for 3SK1121 Advanced relay time-delayed basic unit 214
13.2.2.4 Technical data for 3SK1122 Advanced solid-state instantaneous basic unit 219
13.2.2.5 Technical data for 3SK1122 Advanced solid-state time-delayed basic unit 223
13.3 Expansion modules 228
13.3.1 Output expansions 228
13.3.1.1 Technical data for output expansion 3SK1211 228
13.3.1.2 Technical data for output expansion 3SK1213 233
13.3.2 Input expansions 237
13.3.2.1 Technical data for input expansion 3SK1220 237
13.3.2.2 Technical data for power supply unit 3SK1230 241
14 Dimension drawings 243
14.1 Dimension drawings for 3SK1 devices 243
14.2 Dimension drawings for 3SK1 device connector 251
15 Accessories 257
A Appendix 259
A.1 Correction sheet 259

Introduction 1

1.1 User responsibility for system design and function

The products described here were developed to perform safety-related functions as part of an overall installation or machine.

A complete, safety-related system is generally equipped with sensors, evaluation units, and signaling units, and uses reliable shutdown concepts.

It is the responsibility of the manufacturer of a system or machine to ensure that the product functions properly.
Siemens AG, its regional offices, and associated companies (hereinafter referred to as "Siemens") cannot guarantee all the properties of an entire plant, system or machine that has not been designed by Siemens.

Nor can Siemens assume liability for recommendations that appear or are implied in the following description. No new guarantee, warranty, or liability claims beyond the scope of the Siemens general terms of supply are to be derived or inferred from the following description.

1.2 Required basic knowledge

A general knowledge of the following areas is needed in order to understand this manual:

- Low-voltage switchgear
- Digital circuit logic
- Automation systems
- Safety systems

1.3 Validity range

The manual is valid for these safety relays SIRIUS 3SK1. It describes the components that are valid at the time of publication.

SIEMENS reserves the right of including a Product Information for each new component, and for each component of a later version.

1.4 Definitions

"3SK1" always applies to all variants of the SIRIUS 3SK1 safety relays.

1.5 DataMatrix code

A DataMatrix code is lasered onto the lower terminal cover of all 3SK1-series safety relays.

DataMatrix codes are standardized in ISO/IEC 16022. The DataMatrix codes on Siemens devices use ECC200 coding for powerful error correction.

The following device information is encoded in the DataMatrix codes as a bit stream:

- MLFB
- Serial number
- MAC address, if applicable

This information is stored in the following format in the DataMatrix code:

1P	MLFB	+	S serial number (+ 23S MAC address)
Data identifier	Net content	Separator	

Note

The information content is displayed without spaces.

This machine-readable information simplifies and accelerates handling of the respective devices.
As well as fast access to the serial numbers of the respective devices for unique identification, the DataMatrix codes simplify communication with Siemens Technical Support.

The DataMatrix codes enable in particular extremely fast and convenient access to all the device-specific information available on an MLFB in the SIEMENS Service&Support Portal, such as operating instructions, manuals, data sheets, FAQs, etc..
We offer the SIEMENS Industry Support App free for this purpose. This can be used on commercially available smartphones and tablet PCs.
The SIEMENS Industry Support App is available for iOS and Android-based terminal devices and can be accessed via the following links:

Link for Android

Link for iOS

1.6 Correction sheet

The appendix to this manual contains a correction sheet for evaluation and feedback. Please use it to record your suggestions for improvements, additions and corrections, and return the sheet to us. This will help us to improve the next edition of the manual.
Thank you.

Product-specific safety information 2

2.1 General safety notes

Note

Recycling and disposal

Dispose of existing packing material in accordance with applicable regulations or recycle it.

The 3SK1 safety relays are able to be recycled thanks to a low-pollutant manufacturing process. For environmentally-friendly recycling and disposal of your electronic waste, please contact a company certified for the disposal of electronic waste.

Note

SILCL 3 to IEC 62061:2005 / PL e to ISO 13849-1:2008

The 3SK1 safety relays are designed in such a way as to allow implementation of applications up to SILCL 3 in accordance with IEC 62061 and PL e/Kat. 4 in accordance with EN ISO 13849-1.

Note

Safe state

The basis of the safety function is the definition of the safe state. In the case of safety relays, this is the "OFF state", i.e. an open contact for sensors or shutdown of the actuators.

⚠ WARNING

Protection against electrically conductive contamination!

The devices must be protected against conductive contamination while taking account of the ambient conditions. One way you can do this is to install the devices in a control cabinet with the appropriate degree of protection.

⚠ WARNING

Safe functional extra-low voltage

The 3SK1 safety relays with a supply voltage of 24 V DC must be operated with safe functional extra-low voltage (SELV, PELV). This means these modules must only be subjected to a voltage of Um even in the event of a fault. The following applies for these 3SK1 safety relays: **Um < 60.0 V**.
You can find more detailed information about safe functional extra low voltage in the data sheets of the power supplies to be used.

CAUTION

Protection against electrostatic charge

When handling and installing the 3SK1 safety relays, ensure that the components are protected from being electrostatically charged. Changes to the system configuration and wiring are only permissible while the supply voltage is switched off.
Connection of 3SK1 safety relays is only permissible when the power supply units (PELV and SELV) are switched off.

CAUTION

Noise immunity / grounding

The following must be grounded in accordance with the regulations to ensure noise immunity of the 3SK1 safety relays:

- PELV / SELV power supply units (please also note the documentation for the respective power supply unit in this regard).

Note

Operational faults and malfunctions in communication

If the EMC Directive 2004/108/EC is not complied with when plants and devices are installed, communication breaks may occur.

Note

Cover the 3ZY12 device connector on the left-hand side using the cover supplied with the device termination connector.

WARNING

3SK1..1 and 3SK1..3 (devices with outputs using contacts):

In continuous operation, the key safety values apply in the case of a function test interval (state change of the outputs) ≤ 1 year.

3SK1..2 (devices with solid-state outputs):

In continuous operation, the key safety values apply in the case of a function test interval (state change of the outputs) ≤ 1 year.

Note

Annual function test

- Actuate the connected sensors.
- Check their effect on the safety relay and the downstream actuators.
- Activate the safety relay via the connected sensors.
- Check their effect on the safety relay and the downstream actuators.
- Defective devices must be replaced.

2.2 Safety information for hazardous areas

WARNING

Hazardous Voltage.

Can Cause Death, Serious Injury, or Property Damage.

Installation of the 3SK1 safety relays in hazardous areas

The components of the 3SK1 are **not** suitable for installation in hazardous areas.
Please contact your ATEX specialist.

2.3 Intended use

WARNING

Hazardous Voltage.

Can Cause Death, Serious Injury, or Property Damage.

Proper use of hardware products

This equipment is only allowed to be used for the applications described in the catalog and in the technical description, and only in conjunction with non-Siemens equipment and components recommended by Siemens.

Correct transport, storage, installation and assembly, as well as careful operation and maintenance, are required to ensure that the product operates safely and without faults.

EU note: Commissioning is absolutely prohibited until it has been ensured that the machine in which the component described here is to be installed complies with the stipulations of the Directive 2006/42/EC.

2.4 Current information about operational safety

Important note for maintaining operational safety of your system

WARNING

Hazardous Voltage

Can Cause Death, Serious Injury, or Property Damage.

Please take note of our latest information

Systems with safety-related characteristics are subject to special operational safety requirements on the part of the operator. The supplier is also obliged to comply with special product monitoring measures. For this reason, we publish a special newsletter containing information on product developments and features that are (or could be) relevant to operation of safety-related systems. By subscribing to the appropriate newsletter, you will ensure that you are always up-to-date and able to make changes to your system, when necessary:

SIEMENS newsletter ()

Sign on to the following newsletter under "Products & Solutions":

- Control Components and System Engineering News
- Safety Integrated Newsletter

2.5 Declaration of conformity

The manufacturer declares that the safety components of the SIRIUS 3SK1 series in the designs marketed by us comply with the applicable basic safety and health requirements of the EC Directives* stated (including amendments) and that the stated standards* were applied in their design and construction.

* You can download the complete EC Declaration of Conformity as a PDF.

Product overview for 3SK1

3

3.1 Overview

Overview of 3SK1 safety relays

The following tables provide an overview of the 3SK1 safety relays.

3SK1 Standard basic units

Designation	Voltages	MLFB
Basic unit 3SK1 Standard instantaneous (with relay outputs)	24 V AC/DC	3SK1111-xAB30
	110 ... 240 V AC/DC	3SK1111-xAW20
Basic unit 3SK1 Standard instantaneous (with solid-state outputs)	24 V DC	3SK1112-xBB40

x = 1: screw terminals; x = 2: push-in terminals

3SK1 Advanced basic units

Designation	Voltages	MLFB
Basic unit 3SK1 Advanced instantaneous (with relay outputs)	24 V DC	3SK1121-xAB40
Basic unit 3SK1 Advanced time-delayed (with relay outputs)	24 V DC	3SK1121-xCB4y
Basic unit 3SK1 Advanced instantaneous (with solid-state outputs)	24 V DC	3SK1122-xAB40
Basic unit 3SK1 Advanced time-delayed (with solid-state outputs)	24 V DC	3SK1122-xCB4y
Basic unit 3SK1 Advanced 17.5 mm instantaneous (with solid-state outputs)	24 V DC	3SK1120-xAB40

x = 1: screw terminals; x = 2: push-in terminals
y = 1: 0.05 ... 3 s; y = 2: 0.5 ... 30 s; y = 4: 5 ... 300 s

Expansion units

Designation	Voltages	MLFB
Output expansion 3SK1211	24 V AC	3SK1211-xBB00
	24 V DC	3SK1211-xBB40
	110 ... 240 V AC/DC	3SK1211-xBW20
Output expansion 3SK1213	24 V DC	3SK1213-xAB40
	115 V AC	3SK1213-xAJ20
	240 V AC	3SK1213-xAL20
Input expansion 3SK1220	24 V DC	3SK1220-xAB40
Power supply 3SK1230	110 ... 240 V AC/DC	3SK1230-xAW20

x = 1: screw terminals; x = 2: push-in terminals

Overview of the enabling circuits

Type and number of enabling circuits						
	Relay		Solid-state		Signaling circuits	Device connectors
Advanced	Instantaneous	Delayed	Instantaneous	Delayed		
3SK1121-xAB40	3	-	-	-	1	✓
3SK1121-xCB4x	2	2	-	-	-	✓
3SK1122-xAB40	-	-	3	-	1	✓
3SK1122-xCB4x	-	-	2	2	-	✓
3SK1120-xAB40	-	-	1	-	-	✓
Standard						
3SK1111-xAxx0	3	-	-	-	1	-
3SK1112-xBB40	-	-	2	-	1	-
Output expansions						
4RO						
3SK1211	4		-	-	1	✓ (for 24 V DC)
3RO						
3SK1213	3	-	-	-	1	✓ (for 24 V DC)

Online configurator

To assist you with configuration, the "SIRIUS 3SK1 safety relay configurator" is at your disposal on the Internet (www.siemens.com/industrial-controls/configurators). You can select and order the correct safety relays here and generate the complete product documentation:

- Product data sheet
- Dimension drawings
- CAD data in 2-D and 3-D model images
- Ordering data
- Product photo

3.2 Overview of components and accessory parts

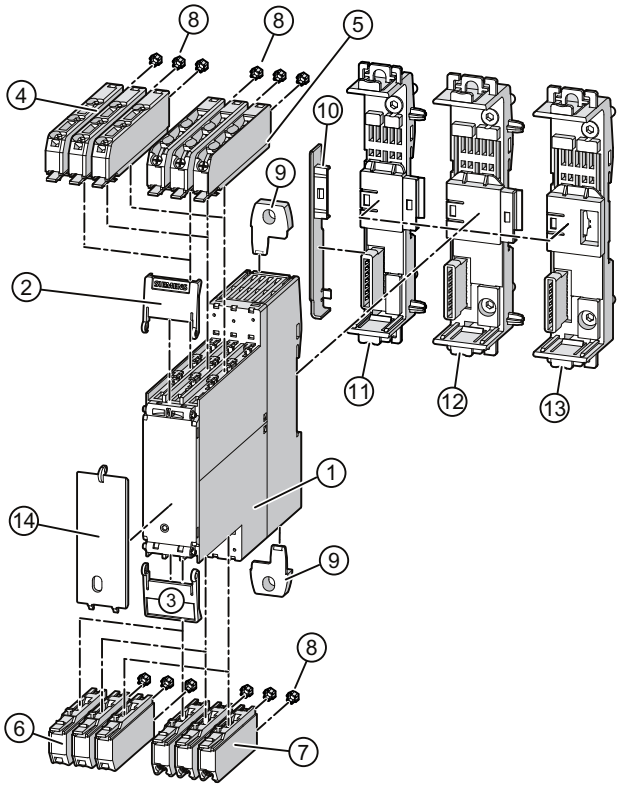

① 3SK1 safety relay (basic unit/expansion unit)
② Top cover flap
③ Bottom cover flap
④ Terminals, 3-pole, push-in, 1 x 2.5 mm²
⑤ Terminals, 3-pole, screw-type, 1 x 2.5 mm²
⑥ Terminals, 2-pole, push-in, 1 x 2.5 mm²
⑦ Terminals, 2-pole, screw-type, 1 x 2.5 mm²
⑧ Coding pins
⑨ Push-in lugs for wall mounting
⑩ Cover
⑪ Device connector, type 1, 17.5 mm
⑫ Device connector, type 1, 22.5 mm
⑬ Device termination connector, type 1, 22.5 mm
⑭ Sealable cover

3.3 Functional scope of the 3SK1 basic units

Function	3SK1 Standard		3SK1 Advanced	
	Type of enabling circuits			
	Relay	Solid-state	Relay	Solid-state
Sensors				
Mechanical sensors	✓	✓	✓	✓
Non-floating sensors	✓	✓	✓	✓
Antivalent sensors	Not possible	Not possible	✓	✓
Sensor number can be increased	Not possible	Cascading only	✓	✓
Parameters				
Type of start (autostart/monitored start)	✓	✓	✓	✓
Sensor connection 2x single-channel / 1x two-channel	Using wiring	✓	✓	✓
Cross-circuit detection OFF / ON	Using wiring	✓	✓	✓
Start-up test OFF / ON	No start-up test	✓	✓	✓
Monitoring of two-hand control units	No	No	✓	✓
Enabling circuits				
Instantaneous	✓	✓	✓	✓
Time-delayed	None	None	✓	✓
Expandable with relay enabling circuits	Using wiring	Using wiring	✓	✓
Device connector	Cannot be used	Cannot be used	✓	✓
Rated control supply voltage				
24 V DC	✓	✓	✓	✓
110 ... 240 V AC/DC	✓	Not possible	✓[1)]	✓[1)]

[1)] Possible using 3SK1230 power supply and device connector

3.4 Introduction

SIRIUS 3SK1 safety relays are mainly used in autonomous safety applications that are not connected to a safety-related bus system. Here they are used to evaluate sensors and ensure safety-related shutdown when required. They also check and monitor the sensors, actuators, and the safety-related functions of the safety relay.

Applications

Depending on the version of the device and the external connection of sensors and actuators, applications up to SIL CL 3 in accordance with IEC 62061, SIL 3 in accordance with IEC 61508 and PL e (Cat. 4) in accordance with ISO 13849-1 can be implemented.

- Monitoring the switch position of the sensors
- Monitoring of the sensor lines
- Monitoring of correct functioning of the safety relay
- Monitoring of the actuators
- Safety-related shutdown in case of hazards

3.5 3SK1 system

3.5.1 Standard

3.5.1.1 Typical system configuration

System configuration for 3SK1 Standard

A 3SK1 Standard system can comprise the following devices:

- Basic units (one basic unit per system)
  - Basic unit 3SK1111 Standard relay instantaneous (see also 3SK1111 Standard basic unit instantaneous (with relay outputs) (Page 44))
  - Basic unit 3SK1112 Standard solid-state instantaneous (see also 3SK1112 Standard basic unit instantaneous (with solid-state outputs) (Page 50))
- Output expansions
  - Output expansion 3SK1211 (see also Output expansion 3SK1211 (Page 80))
  - Output expansion 3SK1213 (see also Output expansion 3SK1213 (Page 84))

The devices are connected using wiring.

Typical 3SK1 Standard system configuration

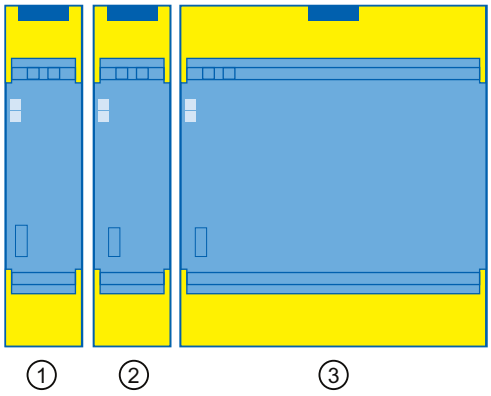

① Basic unit 3SK1 Standard
② Output expansion 3SK1211
③ Output expansion 3SK1213

3.5.2 Advanced

3.5.2.1 Typical system configuration

System configuration for 3SK1 Advanced

A 3SK1 Advanced system can comprise the following devices:

- Basic units (one basic unit per system)
  - Basic unit 3SK1121 Advanced relay instantaneous (see also 3SK1121 Advanced basic unit instantaneous (with relay outputs) (Page 60))
  - Basic unit 3SK1121 Advanced relay time-delayed (see also 3SK1121 Advanced basic unit time-delayed (with relay outputs) (Page 63))
  - Basic unit 3SK1122 Advanced solid-state instantaneous (see also 3SK1122 Advanced basic unit instantaneous (with solid-state outputs) (Page 67))
  - Basic unit 3SK1122 Advanced solid-state time-delayed (see also 3SK1122 Advanced basic unit time-delayed (with solid-state outputs) (Page 71))
  - Basic unit 3SK1120 Advanced 17.5 mm solid-state instantaneous (see also 3SK1120 Advanced basic unit instantaneous (with solid-state outputs) (Page 75))
- Input expansions
  - Power supply 3SK1230 (see also Power supply 3SK1230 (Page 91))
  - Input expansion 3SK1220(see also Input expansion 3SK1220 (Page 87))
- Output expansions
  - Output expansion 3SK1211 (see also Output expansion 3SK1211 (Page 80))
  - Output expansion 3SK1213 (see also Output expansion 3SK1213 (Page 84))
- Device connector (optional) (see also 3ZY12 device connector (Page 98))

The devices are connected by means of device connectors or wiring.

Typical 3SK1 Advanced system configuration

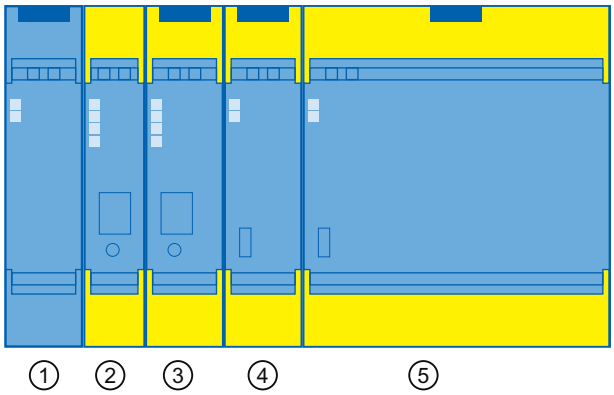

① Power supply 3SK1230
② Input expansion 3SK1220
③ Basic unit 3SK1 Advanced
④ Output expansion 3SK1211
⑤ Output expansion 3SK1213

Safety systems - General information 4

4.1 What is safety?

Safety defines a state in which the risk of damage is reduced to a tolerable level, or which can be regarded as risk-free. Following on from this definition, functional safety concerns persons, machines and the environment.

The objective of safety systems is to reduce the risk for humans and machines that is posed by a use case to an acceptable level. The first step is, therefore, to identify the risk of a use case. In order to make a reliable assessment regarding the application, each individual function of a machine or plant must be analyzed for potential hazards.

For further information, refer to the brochure "Safety of machines and plants" which is available here as a download: Functional safety (http://wwwsiemens.com/safety).

4.2 Safety function

A safety function describes the reaction of a machine/plant to the occurrence of a specific event (e.g. opening of a protective door). Execution of the safety function(s) is carried out by a safety-related control system. This usually comprises three subsystems, **detecting**, **evaluating** and reacting.

Detecting (sensors):

- Detection of a safety requirement,
  e.g.: EMERGENCY STOP or a sensor for monitoring a hazardous area (light array, laser scanner, etc.) is operated.

Evaluating (safety relay):

- Detection of a safety requirement and the safe initiation of the reaction (e.g. switching off the enabling circuits).
- Monitoring the correct operation of sensors and actuators
- Initiating a reaction upon detection of faults

For the 3SK1 products described in this manual, this concerns evaluation units for safety functions.

Reacting (actuators):

- Switching off the hazard by means of downstream actuators.

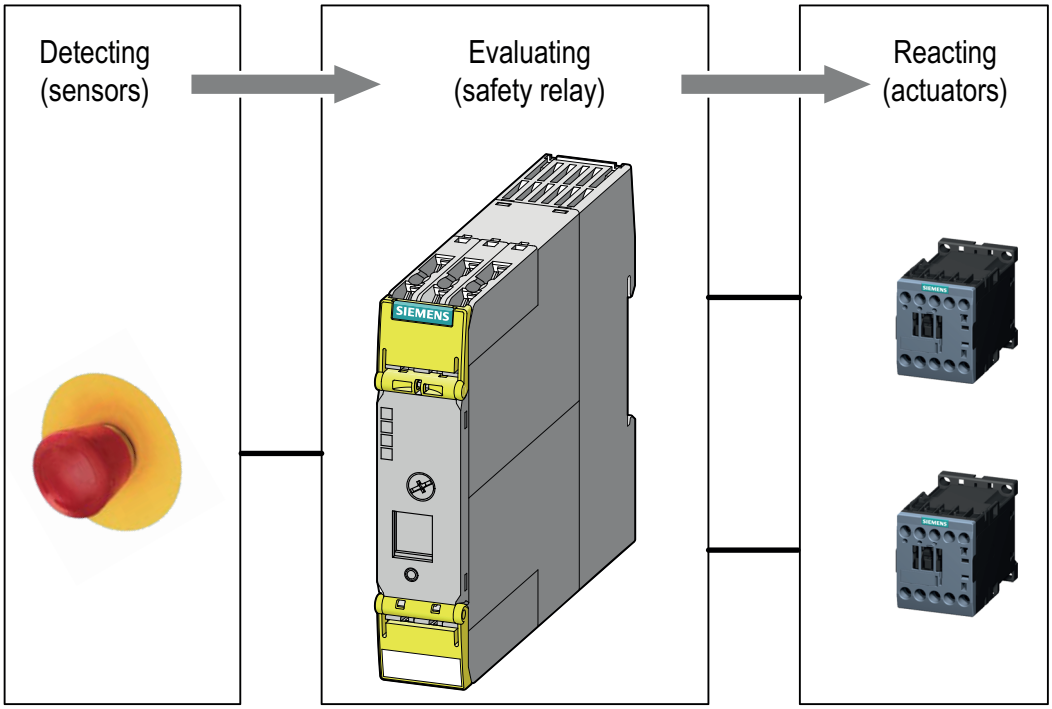

4.3 Basic terminology

4.3.1 Redundancy/single-channel and two-channel

Redundancy

With redundancy, more than one component is implemented for the same function, so a faulty function of a component is performed instead by the other component(s).

A redundant configuration reduces the probability of a function failing due to a single defective component. This requirement is essential for achieving SILCL 3 in accordance with IEC 62061, SIL 3 in accordance with IEC 61508 and PL e (Cat. 4) in accordance with ISO 13849-1 (also necessary for SIL 2 / PL d under certain circumstances).

The simplest form of redundancy is **two-channel redundancy.**

If a circuit fails, two-channel redundancy ensures that the safety function is maintained.

In a redundant system configuration, the subsystems for detecting and reacting must also be implemented with two-channel redundancy.

Note

All SIRIUS Safety devices that comply with SILCL 3 in accordance with IEC 62061, SIL 3 in accordance with IEC 61508 and PL e (Cat. 4) in accordance with DIN EN ISO 13849-1 are redundantly configured with regard to the internal logic as well as with regard to the output circuits.

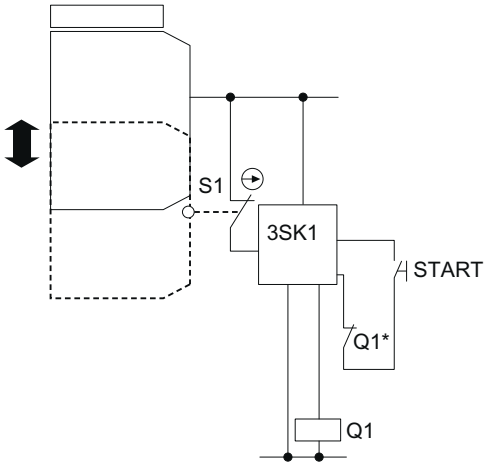

Figure 4-1 Single-channel sensor connection

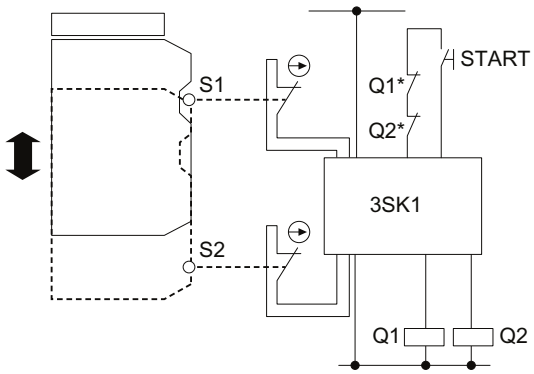

Figure 4-2 Two-channel sensor connection

* = positively-driven auxiliary contacts/mirror contacts

4.3.2 Cross-circuit detection

Cross-circuit detection is a diagnostic function of a safety relay that detects short-circuits and cross-circuits between the input channels (sensor circuits) during two-channel sensing or reading. A cross-circuit can be caused, for example, by a cable casing being squashed. In devices without cross-circuit detection, this can mean that a two-channel EMERGENCY STOP circuit does not trip even though only one NC contact is faulty (secondary error).

With 3SK1 devices, a cross-circuit is detected in the sensor circuits by means of signals with different clock pulses. If the clocked signals overlap, the device detects a cross-circuit. With 3SK1 basic units, cross-circuit detection can be deactivated to allow electronic sensors to be evaluated (that monitor themselves as well as the cable to the evaluation unit.

4.3.3 Enabling circuit

An enabling circuit provides a safety-related output signal. From an external viewpoint, enabling circuits usually act as NO contacts (however, in terms of functionality, safety-oriented opening is always the most important aspect).

An individual enabling circuit that is redundantly configured internally in the safety relay can be used for SIL 3 / PL e.

Note: Enabling current paths can also be used for signaling purposes.

3SK1 safety relays are only equipped with enabling circuits with NO functionality. This means that when the safety function is triggered, or a fault is detected, the enabling circuits will always transfer to the safe state (NO contact open).

4.3.4 Signaling circuit

A current signaling path provides a safety-related output signal. Signaling circuits can be implemented with either NC or NO contact functionality.

With 3SK1 relays, the signaling circuits are always implemented as NC circuits. This means that when the safety function is triggered, or a fault is detected, the signaling circuits will always close.

4.3.5 Feedback circuit

A feedback circuit is used to monitor controlled actuators (e.g. relays or load contactors) with positively driven contacts or mirror contacts. The enabling circuits can only be activated with the feedback circuit closed.

Note

When 3SK1 expansion units are used on 3ZY1 device connectors with 3SK1 Advanced basic units, it is not necessary to incorporate the expansion modules in the feedback circuit wiring. This is implemented internally via the device connector.

4.3.6 Stop categories

Stop category 0

Non-controlled shutdown by immediately switching off the power to the machine's drive elements.

Stop category 1

Controlled stopping where the energy feed is interrupted with a time delay, or is only interrupted once standstill has been reached.

Note

The time-delayed shutdown of enabling circuits in accordance with Stop category 1 is not guaranteed under all operating states.

In the case of some internal device faults, and when disconnecting the supply voltage, these enabling circuits are switched off **instantaneously**.

4.3.7 Automatic start

For an automatic start, the device is started without manual confirmation, but only after the input image has been checked and a positive test of the safety relay has been conducted. This function is also known as dynamic operation and is not permissible for EMERGENCY STOP devices. Safety devices for prohibited danger zones (e.g. position switches, light arrays, safety shutdown mats) can use the automatic start function if this does not pose any risk.

Note

An automatic start is not permitted for EMERGENCY STOP devices.

4.3.8 Manual start

For a manual start, the device is started by operating the START button, but only after the input image has been checked and a positive test of the safety relay has been conducted. On a manual start, the START button is not monitored for correct operation, a positive edge of the START button is sufficient for starting.

Note

The "Manual start" function is only available with the 3SK1111 safety relays (slide switch at Autostart position).

Note

Manual start is not permitted for EMERGENCY STOP devices.

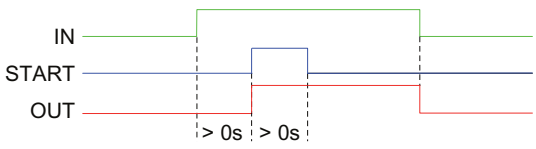

Figure 4-3 Start function "Manual start"

4.3.9 Monitored start

For a monitored start, the device is started by operating the START button, but only after the input image has been checked and a positive test of the safety relay has been conducted.

Contrary to the manual start, the monitored start evaluates a **signal change** of the START button. This means that the START button cannot be bypassed (misuse). For PL e (ISO 13849-1) as well as SIL 3 (IEC 62061), the monitored start must be used in the case of EMERGENCY STOP. For other safety sensors/functions, the necessity for a monitored start command depends on the risk assesment.

If the START button is operated for more than 2 seconds, the 3SK1 basic unit detects a wiring short-circuit in the START button and switches to the fault state (Device = green; SF = flashing red; Out = flashing yellow; IN = off)

Note

In the delivery state of the 3SK1 safety relays, the start type is set to "Monitored start".

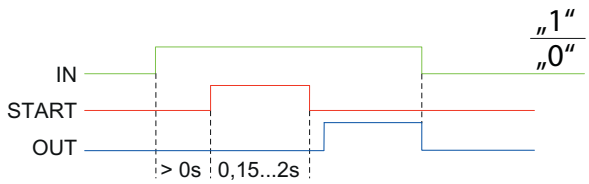

Figure 4-4 Start function "Monitored start"

4.3.10 Two-hand operation/synchronism

Synchronous sensor operation is a special form of simultaneity of sensors.

In this case, it is not sufficient for sensor contacts 1 and 2 to be switched to the closed state at different times, they must be closed within 0.5 seconds.

Synchronism of sensors is required, in particular, in the case of two-hand operation of presses. This ensures that the presses only become active when the sensors are operated simultaneously with both hands. This minimizes the risk of the operator getting a hand in the press.

Note

In the delivery state of 3SK1 safety relays, monitoring of time synchronism is deactivated. Time synchronism can be activated using the following adjustable parameter for 3SK11 Advanced and 3SK122 Advanced:

- Jumper T1/PAR (NO/NC evaluation)
- Dip switches (1) Autostart
- Dip switches (3) 2 x single-channel

Note

The 3SK1 Advanced safety relays support exclusively two-hand control units with two NO contacts.

4.3.11 Cascading

Cascading of safety relays is used for tripping safety relays in series.

Several safety functions can then be logically connected to a shared shutdown path. Several enabling circuits can be created for selective shutdown of drive elements.

The connection between the individual modules must be arranged on one side only, because cascading from the last relay to the first one would create a loop which would prevent starting.

Cascading is implemented within a control cabinet in a single-channel configuration; this is even permissible with SIL 3 / PL e, because cable routing within a control cabinet is protected against short-circuits and short-circuiting to P potential (fault exclusion in accordance with ISO 13849-2).

The 3SK1 Advanced device series offers an extremely convenient solution for cascading. Input expansions can be easily connected to the evaluation unit by means of device connectors.

4.3.12 Startup testing

The sensor or protection equipment must be opened and closed again after the supply voltage is restored before the enables for the 3SK1 safety relay can be switched through.

Startup testing ensures that any errors in the sensors are detected (again), because safety relays lose their ability to store errors at zero voltage.

Unauthorized manipulation of the protection equipment can also be detected through startup testing.

The plant operator decides whether startup testing should be performed (risk assessment). No general statements apply.

Note

In the delivery state of 3SK1 safety relays, startup testing is deactivated.

4.3.13 Connection of actuators

Note

To achieve the Performance Level / Safety Integrity Level given in the following examples, the actuators shown must be monitored in the feedback circuit of the corresponding safety relay.

Note

For capacitive and inductive loads, we recommend an adequate protective circuit. In this way, electromagnetic interference can be suppressed and contact service life increased.

You can find more information in the SIRIUS Innovations - SIRIUS 3RT2 Contactors/Contactor Assemblies manual (http://support.automation.siemens.com/WW/view/en/60306557)

Actuator wiring up to PL c / Cat. 2 in accordance with ISO 13849-1 or SILCL 1 in accordance with IEC 62061

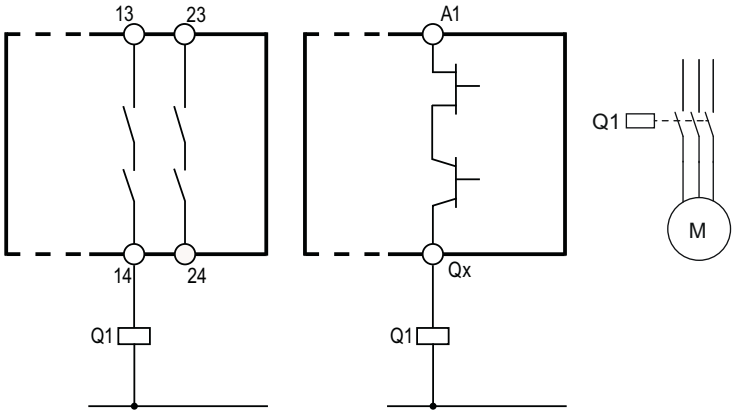

Figure 4-5 PL c / Cat. 2 in accordance with ISO 13849-1 or SILCL 1 in accordance with IEC 62061

Actuator wiring up to PL e / Cat. 4 in accordance with ISO 13849-1 or SILCL 3 in accordance with IEC 62061

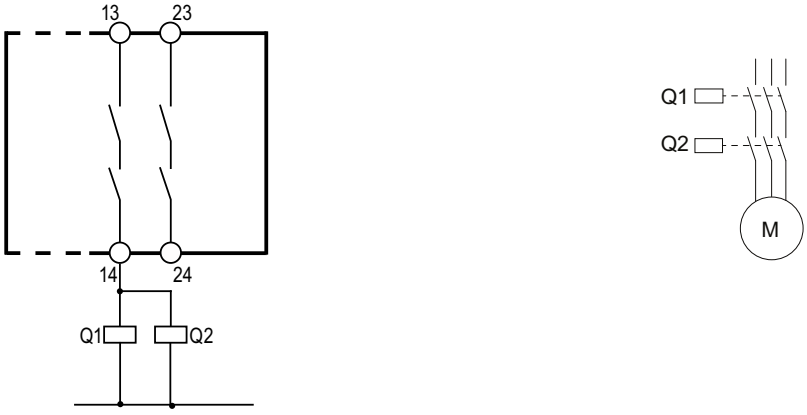

Figure 4-6 PL e / Cat. 4 in accordance with ISO 13849-1 or SILCL 3 in accordance with IEC 62061

WARNING

PL e / Cat. 4 in accordance with ISO 13849-1 or SILCL 3 in accordance with IEC 62061 can only be achieved with 3SK1111-…and 3SK1121-… and cross-circuit-proof/short-circuit to P-proof laying of the control cables from the relay output (e.g. 14) to the control relays/contactors (Q1 and Q2) (e.g. as a separately sheathed cable or in its own cable duct).

Note

In the case of 3SK1..2 (devices with solid-state outputs) it is not possible to achieve PL d/e / Cat. 3/4 in accordance with ISO 13849-1 or SILCL 2/3 in accordance with IEC 62061 with the wiring shown above.

Actuator wiring up to PL e / Cat. 4 in accordance with ISO 13849-1 or SILCL 3 in accordance with IEC 62061

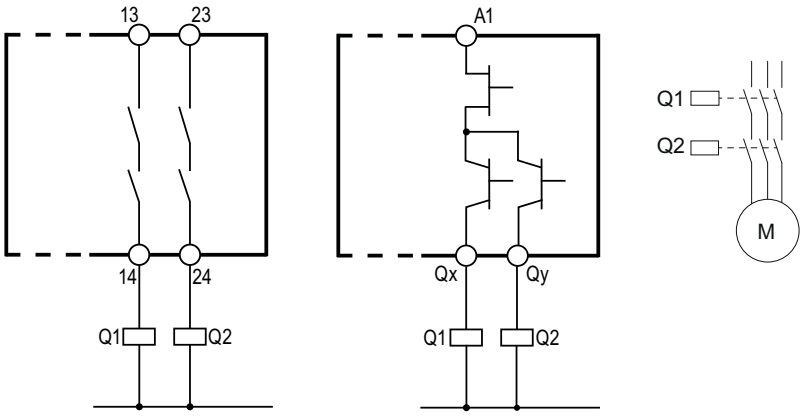

Figure 4-7 PL e / Cat. 4 in accordance with ISO 13849-1 or SILCL 3 in accordance with IEC 62061

WARNING

For 3SK1..2 (devices with solid-state outputs): In continuous operation, the key safety values apply in the case of a function test interval (state change of the outputs) ≤ 1 year.

4.3.14 Series connection of sensors

Series connection of EMERGENCY STOP command devices

It is possible to connect EMERGENCY STOP command elements in series up to the highest safety level (SILCL 3 in accordance with IEC 62061, SIL 3 in accordance with IEC 61508 and PL e (Cat. 4) in accordance with ISO 13849-1), because it is assumed that only one EMERGENCY STOP is operated at a time. This ensures that errors and defects can be detected.

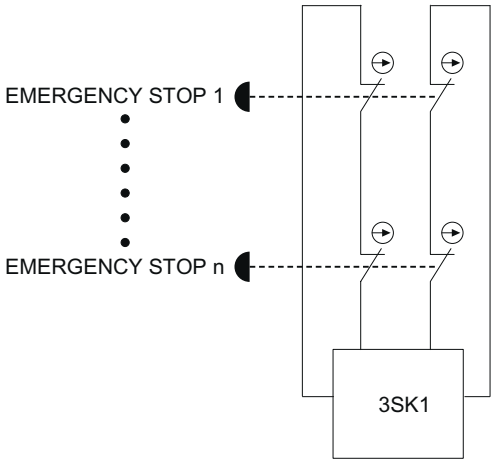

Series connection of position switches

In general, position switches may be connected in series if measures ensure that several protective doors are not regularly opened simultaneously (otherwise a fault cannot be detected).

For safety level SILCL3 in accordance with IEC 62061, SIL3 in accordance with IEC 61508, and PL e (Cat. 4) in accordance with ISO 13849-1, however, they must **never** be connected in series, because every hazardous error must be detected (independently of the operating personnel).

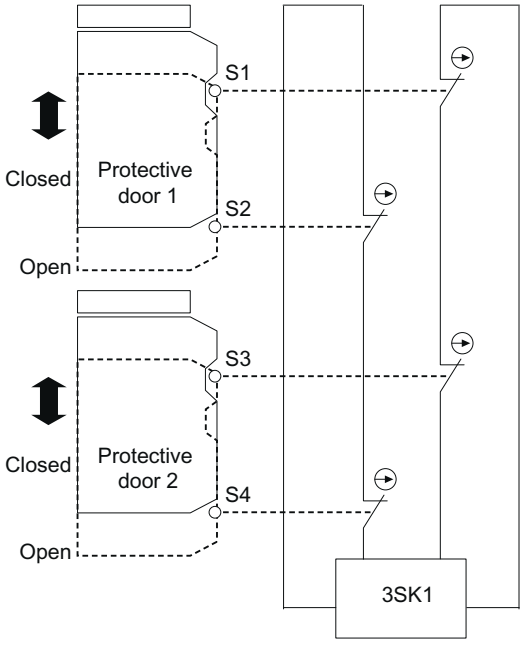

3SK1 devices

5

5.1 3SK1 standard

5.1.1 General information

The safety relays of the Standard series can be configured as stand-alone devices or as an expansion solution with conventional wiring technology.

The focus of the Standard series is on:

- Single devices for simple safety applications
- Output-side expansion by means of expansion units and external wiring
- No expansion on the input side

5.1.2 Applications

The safety relay can be used in EMERGENCY OFF/EMERGENCY STOP devices in accordance with ISO 13850 and in safety circuits in accordance with VDE 0113-1 and/or DIN EN 60204-1. Depending on the external circuit, it is possible to achieve SILCL 3 in accordance with IEC 62061, SIL 3 in accordance with IEC 61508 and PL e (Cat. 4) in accordance with ISO 13849-1.

Application examples

- EMERGENCY OFF / EMERGENCY STOP monitoring.
- Monitoring of protective doors with electromechanical position switches, solid-state position switches, or solenoid switches.
- Monitoring of contact-free protection equipment, e.g. light arrays/light barriers, or laser scanners.

5.1.3 3SK1111 Standard basic unit instantaneous (with relay outputs)

5.1.3.1 General information

MLFB:

3SK1111-*AB30	24 V AC/DC
3SK1111-*AW20	110 ... 240 V AC / DC (wide-range supply)

(*) 1: = screw-type terminal; 2: = push-in terminal

Device features:

- 2 sensor inputs (channels 1 and 2)
- 1 input for feedback circuit and START button
- 3 enabling circuits (safety-related circuits, NO contacts)
- 1 signaling circuit (non-safety-related circuit, NC contact)
- 2 LEDs for displaying the operating states
- Slide switch for function setting
- Single-channel or two-channel connection
- Cross-circuit detection between sensor channels 1 and 2
- Enclosure width 22.5 mm
- Removable terminals

5.1.3.2 Function description

The device is a two-channel safety relay for EMERGENCY OFF and EMERGENCY STOP equipment in accordance with EN 60204-1.
The 3SK1111 Standard basic unit is equipped with a positively-driven relay and monitors itself during every ON/OFF cycle.
The safety relay has three enabling circuits (safety-related circuits) as NO circuits and a signaling circuit (non-safety-related circuit, NC contact).
On the front of the device there is a slide switch for function setting and two LEDs for displaying the operating states.

5.1.3.3 Design

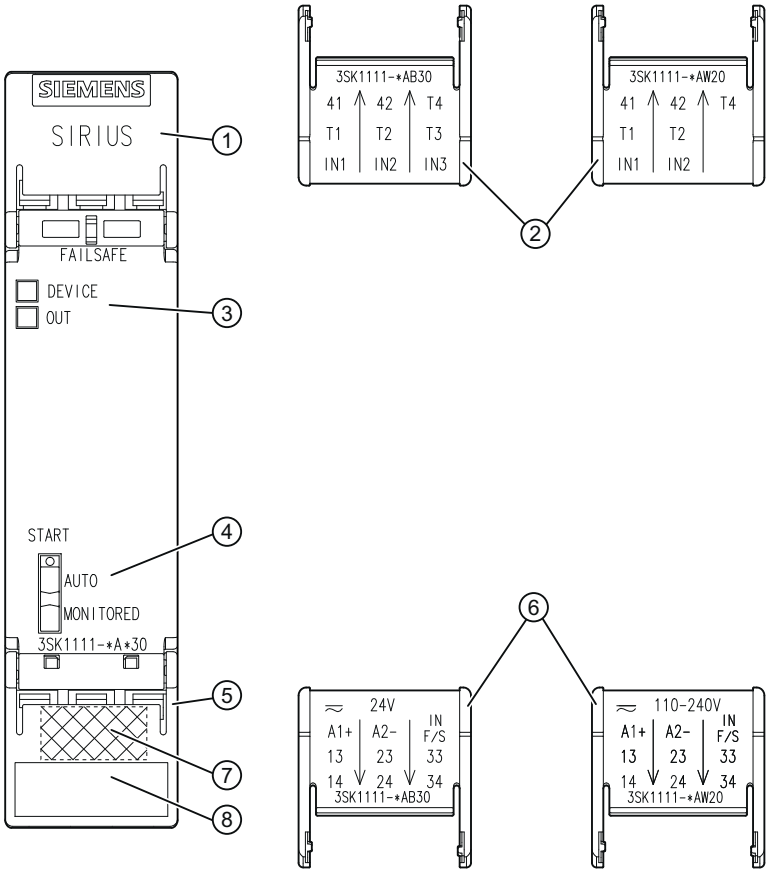

① Top cover flap
② Top cover flap; internal inscription
③ Display LEDs
④ Slide switch
⑤ Bottom cover flap
⑥ Bottom cover flap; internal inscription
⑦ DataMatrix code
⑧ Device identification label

5.1.3.4 Terminal assignment

Terminal	Explanation
A1	L+
A2	N-
IN1	Sensor channel 1
IN2	Sensor channel 2
IN3	Non-floating sensor evaluation [1]
INF/S	Feedback circuit/START button
T1	Test output 1 (for IN1)
T2	Test output 2 (for IN2)
T3	Test output 3 (for IN3) [1]
T4	Test output 4 (for INF/S)
13 - 14 23 - 24 33 - 34	Enabling circuits (NO, relay contact)
41 - 42	Signaling circuits (NC, relay contact)
Floating:	Sensors T1 / IN1 and T2 / IN2 jumper T3/IN3
Non-floating	SensorsIN1 and IN3[1] jumper T2/ IN2

[1] For 24 V AC/DC variant only

5.1.3.5 Inputs

The device has three or four inputs for safe signal processing: IN1, IN2 or IN3 (24 V floating devices only), INF/S:

Inputs IN1 and IN2 can only be operated in two-channel mode with cross-circuit detection. Single-channel activation is only possible via the supply voltage connection (A1). In this case, circuits T1/IN1, T2/IN2 and T3/IN3 (24 V devices only) must be jumpered.

Sensor input INF/S is used to monitor a START button and/or external feedback circuits. When a START button is implemented and external feedback circuits are monitored, the floating contacts must be connected in series between T4 and INF/S.

Voltage variant 24 V:

Connecting floating sensors:

When floating sensors are used, for two-channel sensor connection, sensor inputs T1/IN1 and T2/IN2 must be used and T3/IN3 must additionally be jumpered.

Connecting non-floating sensors:

With non-floating sensors, cross-circuit detection must be deactivated.
This is implemented by the following pin assignment on the 3SK1111-.AB30:

IN1 and IN3 must be used as the input terminal for the two-channel non-floating sensor. In addition, T2/IN2 must be jumpered.

Voltage variant 110 V ... 240 V AC/DC:

Only **floating sensors** can be connected to the device version 3SK1111-.AW20.

Connection of the two-channel sensor takes place via T1/IN1 and T2/IN2.

5.1.3.6 Outputs

The safety relay has the following outputs:

- Safety-related outputs (enabling circuits, relays), NO contacts: 13/14, 23/24, 33/34
- Non-safety-related outputs (enabling circuit; relays), NC contacts: 41/42

5.1.3.7 Display of the operating state

Display of the operating state

Two LEDs and a slide switch indicate the operating state and functioning of the device:

- DEVICE
- OUT

LED displays

LED		Operation			
DEVICE	OUT	Line supply	Sensor	START button	Enabling circuit
Green	Green	ON	Not pressed	Pressed	Closed
Green	OFF		Pressed	Not pressed	Open
Green	OFF		Not pressed	Not pressed	Open
		Error			
OFF	OFF	Cross-circuit or no power supply			Open

5.1.3.8 Function setting

Setting the functions

Slide switch		
Start ☐ AUTO ■ MONITORED	AUTO	Autostart
	MONITORED	Monitored start

In the delivery state, the slide switch is at the bottom (monitored start).

State diagrams 3SK1111

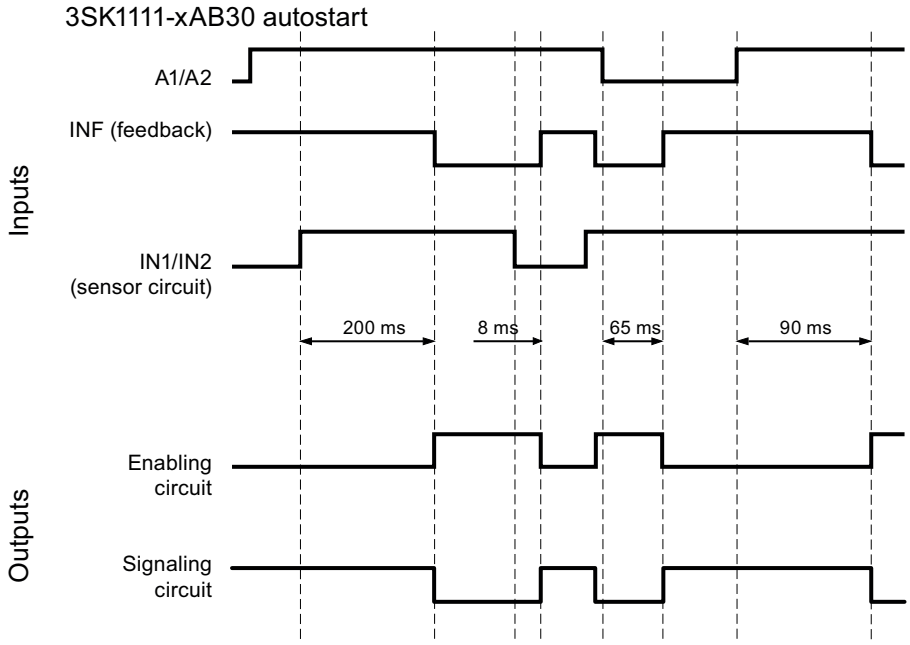

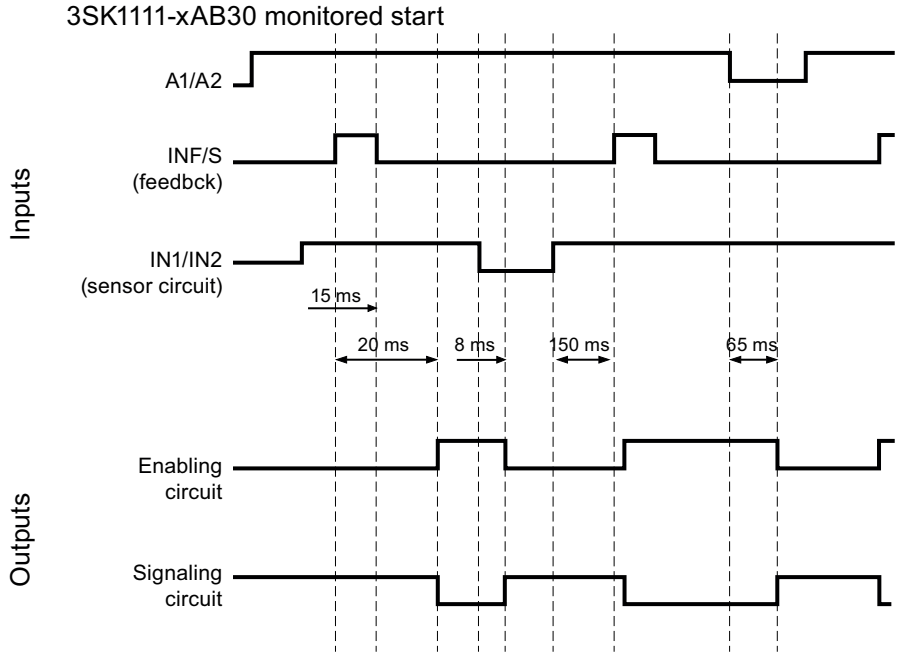

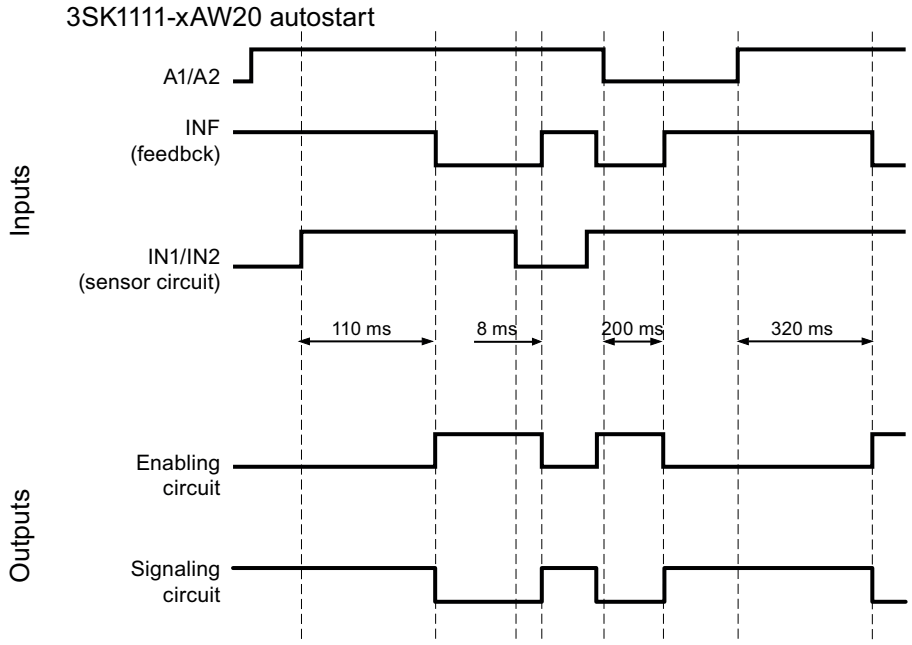
3SK1111-xAW20 autostart
Inputs
A1/A2
INF
(feedbck)
IN1/IN2
(sensor circuit)
110 ms
8 ms
200 ms
320 ms
Outputs
Enabling
circuit
Signaling
circuit

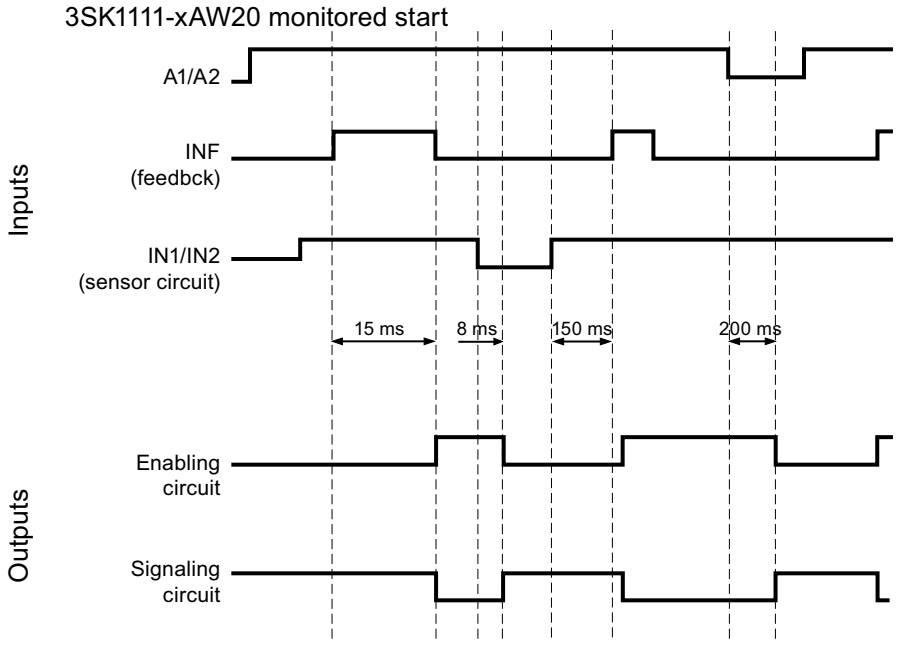
3SK1111-xAW20 monitored start
Inputs
A1/A2
INF
(feedbck)
IN1/IN2
(sensor circuit)
15 ms
8 ms
150 ms
200 ms
Outputs
Enabling
circuit
Signaling
circuit

5.1.4 3SK1112 Standard basic unit instantaneous (with solid-state outputs)

5.1.4.1 General information

MLFB:

3SK1112-*BB40	24 V DC

(*) 1: = screw-type terminal; 2: = push-in terminal

Device features:

- 4-way DIP switch for function setting (parameterization)
- SET/RESET button
- 4 LEDs for status and function display
- 2 sensor inputs (channels 1 and 2)
- 1 input (cascading circuit)
- 1 input (START pushbutton circuit)
- 1 input (feedback circuit)
- 2 test outputs
- 2 safe solid-state outputs
- 1 solid-state signaling circuit
- Enclosure width 22.5 mm
- Removable terminals

⚠ WARNING

In continuous operation for PL e / Cat. 4 in accordance with ISO 13849-1 or SILCL 3 in accordance with IEC 62061, the key safety values apply in the case of a function test interval (state change of the outputs) ≤ 1 year.

5.1.4.2 Function description

The 3SK1112 safety relay has two safety-related solid-state safe outputs and one non-safety-related signaling circuit.
On the front of the device there is a 4-way DIP switch for function setting and 4 LEDs for status and function display.
The SET/RESET button is used to load function settings and to restart the device (reset).
On commissioning, the device runs through a self-test. This checks that the internal electronics and firmware are functioning correctly. All internal safety-critical parts of the circuit are cyclically monitored for faults during operation.

5.1.4.3 Design

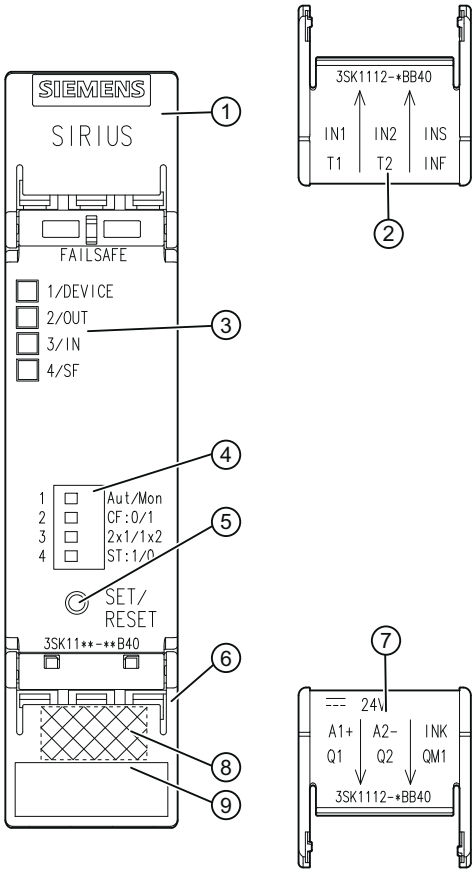

① Top cover flap
② Top cover flap; internal inscription
③ Display LEDs
④ DIP switch
⑤ SET/RESET button
⑥ Bottom cover flap
⑦ Bottom cover flap; internal inscription
⑧ DataMatrix code
⑨ Device identification label

5.1.4.4 Terminal assignment

Terminal	Explanation
A1	+
A2	-
IN1	Sensor channel 1
IN2	Sensor channel 2
INS	START pushbutton circuit
INF	Feedback circuit
INK	Cascading circuit
T1	Test output 1 (for IN1)
T2	Test output 2 (for IN2, INF)
Q1	Safe output 1 (switching to P potential, 24 V DC solid-state)
Q2	Safe output 2 (switching to P potential, 24 V DC solid-state)
QM1	Signaling circuit 1 (switching to P potential, 24 V DC solid-state)

5.1.4.5 Inputs

The device has five inputs for safe signal processing: IN1, IN2, INS, INF, INK:

- IN1: sensor input channel 1
- IN2: sensor input channel 2
- INS: START pushbutton circuit (start after rising and falling edge)
- INF: Feedback circuit (checked for being closed: before switching on)
- INK: Cascading circuit (cascading input / normal switching duty
- The cascading circuit is AND-connected with the sensor inputs IN1 and IN2 .
- ON-button circuit and cascading circuit are activated with a static +24 V DC signal.
- With cross-circuit detection activated, the following inputs are checked for cross-circuits: IN1/T1, IN2/T2. The supply is taken in this case from test outputs T1 and T2. INF/T2 is only checked for a short-circuit to P potential.
- If "without cross-circuit detection" is set on the device, inputs IN1 and IN2 are not checked for cross-circuits. Inputs IN1 and IN2 must not be supplied via T1/T2 here, otherwise a fault will be generated via input INF. It is therefore essential that inputs IN1 and IN2 are supplied via an external + 24 V DC current source from which the device is also supplied.

Note

Observe the following special points during commissioning of the 3SK1112 safety relay:

The cascading input must be jumpered if it is not to be used.

Monitoring of the feedback circuits is not optional.

5.1.4.6 Outputs

The safety relay has the following outputs:

- Q1, Q2: safety-related solid-state outputs with dynamic monitoring, switching to P potential
- QM1: non-safety-related solid-state signaling circuit, switching to P potential

The safe outputs and the safety-related signaling circuit are short-circuit proof.

5.1.4.7 Display of the operating state

Display of the operating state

Four LEDs and one DIP switch indicate the operating state and functioning of the device:

- (1) DEVICE
- (2) OUT
- (3) IN
- (4) SF

The four LEDs show the following:

- Operating mode: Diagnostics
- Configuration mode: DIP setting

For an explanation of the operating state display, see Section Display and diagnostics (Page 187)

5.1.4.8 Function setting

Table 5- 1 **DIP switch**

Switch position: left	Schematic	DIP switch No.	Switch position: right
Autostart	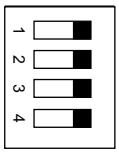	1	Monitored start
Cross-circuit detection deactivated		2	Cross-circuit detection activated
2 x single-channel sensor connection		3	1 x two-channel sensor connection
Start-up test ON		4	Start-up test OFF

In the delivery state, all the DIP switches are in switch position: right.

Table 5- 2 **SET/RESET button**

Function of the SET/RESET button	Status of the indicating LEDs	Function
SET	"DEVICE" LED flashing yellow	• **Press key for about 1 s** The parameterization is loaded
RESET	"DEVICE" LED red	• **Press key for about 1 s** => The device restarts without the supply voltage having to be switched off
	"DEVICE" LED flashing green yellow	
	"SF" LED red	

Note

The SET/RESET pushbutton only triggers a reset for the device on which the button is pressed.

State diagrams 3SK1112

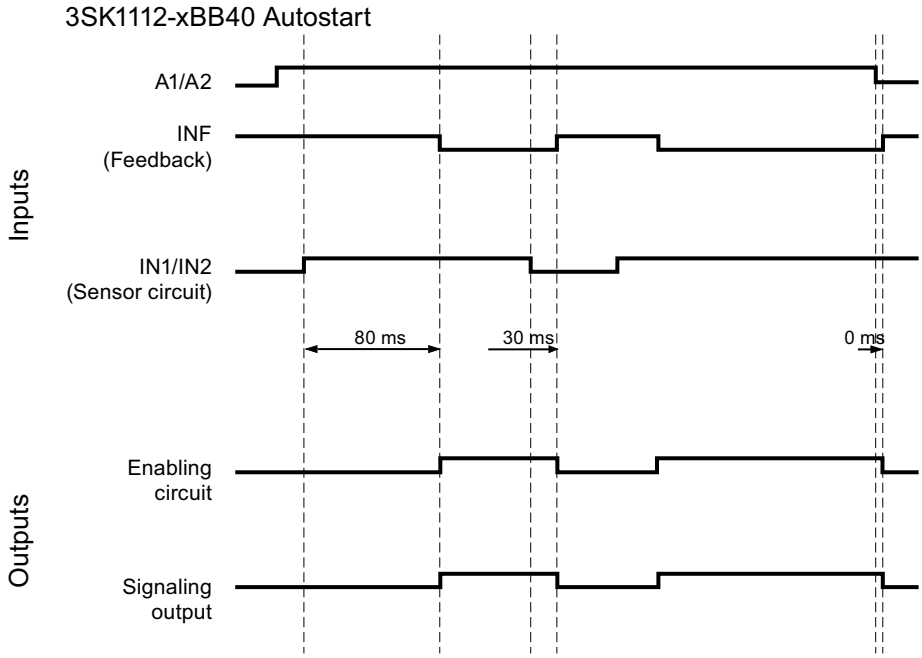

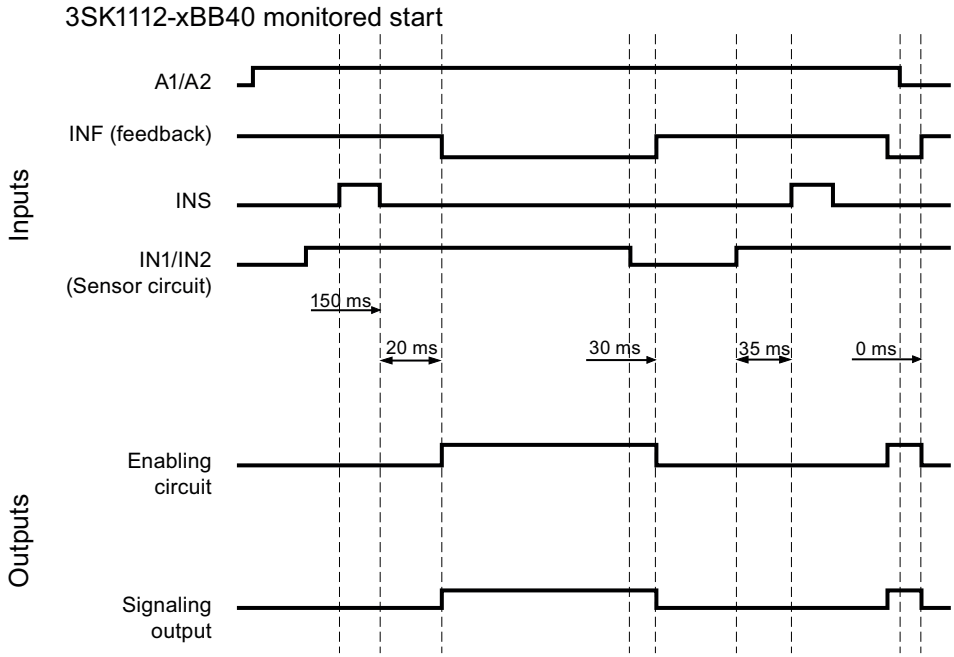

5.2 3SK1 Advanced

5.2.1 General information

The safety relays of the Advanced device series comprise basic devices and input and output expansions. The Advanced devices can be connected by means of a 3ZY12 device connector.
When configuring the system, it must be ensured that input expansions are always mounted on the left, and output expansions (3SK121) on the right of the basic unit. For control supply voltages of 110 ... 240 V AC/DC, the Advanced device series can be supplied with the necessary 24 V DC voltage from the 3SK1230 power supply (which must be positioned on the extreme left in the system).

The focus of the Advanced relay series is on:

- Single devices that can be flexibly parameterized
- Expandability using 3ZY12 device connector on both input and output side
- Basic units with time-delayed enabling circuits / outputs

5.2.2 Applications

- EMERGENCY OFF / EMERGENCY STOP monitoring.
- Monitoring of protective doors with electromechanical position switches, solid-state position switches, or solenoid switches.
- Monitoring of contact-free protection equipment, e.g. light arrays/light barriers, or laser scanners.

The 3SK1 Advanced safety relays can be used in EMERGENCY OFF and EMERGENCY STOP devices in accordance with ISO 60204-1 and in safety circuits in accordance with VDE 0113-1 and / or DIN EN 60204-1, e.g. in circuits in which controlled shutdown, STOP Category 1 is necessary. Depending on the external circuit, it is possible to achieve SILCL 3 in accordance with IEC 62061, SIL 3 in accordance with IEC 61508 and PL e (Cat. 4) in accordance with ISO 13849-1.

5.2.3 General device features

Device properties:

- 4-way DIP switch for function setting (parameterization)
- SET/RESET button
- 4 LEDs for status and function display
- 2 sensor inputs (channels 1 and 2)
- 1 input (cascading circuit)
- 1 input (START pushbutton circuit)
- NO contact/NC contact evaluation via external jumper
- Connection interface
- Removable terminals

5.2.4 Function description

On the front of the 3SK1 Advanced basic units, there is a 4-way DIP switch for function setting and 4 LEDs for status and function display. A SET/RESET button can be used to load function settings and to perform a device restart (reset). On commissioning, the devices runs a self-test in which the internal electronics and firmware are checked for correct functioning. All internal parts of the circuit are cyclically monitored for faults during operation. The semiconductor outputs run through a dark test for up to 2 ms (dynamically) to verify their correct function. The safety relays can be expanded using 3ZY device connectors with input and output expansions.

Basic unit 3SK1 Advanced time-delayed only:

These basic units have two time-delayed and two instantaneous enabling circuits as NO circuits or outputs switching to P potential.

Display of the operating state

Four LEDs and one DIP switch indicate the operating state and functioning of the device:

- (1) DEVICE
- (2) OUT
- (3) IN
- (4) SF

The four LEDs show the following:

- Operating mode: Diagnostics
- Configuration mode: DIP setting

For an explanation of the operating state display, see Section Display and diagnostics (Page 187)

5.2.5 Functions

Table 5- 3 **DIP switch**

Switch position: left	Schematic	DIP switch No.	Switch position: right
Autostart	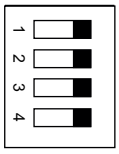	1	Monitored start
Cross-circuit detection deactivated		2	Cross-circuit detection activated
2 x single-channel sensor connection		3	1 x two-channel sensor connection
Start-up test ON		4	Start-up test OFF

In the delivery state, all the DIP switches are in switch position: right.

Terminal parameterization:

Jumper on terminals T1/PAR = NO/NC evaluation

Table 5- 4 **SET/RESET button**

Function of the SET/RESET button	Status of the indicating LEDs	Function
SET	"DEVICE" LED flashing yellow	• **Press key for about 1 s** The parameterization is loaded
RESET	"DEVICE" LED red	• **Press key for about 1 s** => The device restarts without the supply voltage having to be switched off
	"DEVICE" LED flashing green yellow	
	"SF" LED red	

Note

The SET/RESET pushbutton only triggers a reset for the device on which the button is pressed.

Potentiometer for time setting

Potentiometer for infinite time setting of the time-delayed enabling circuits on the Advanced basic units (with time-delayed enabling circuits).

- 3SK112.-.CB41 setting range: 0.05 ... 3 s
- 3SK112.-.CB42 setting range: 0.5 ... 30 s
- 3SK112.-.CB44 setting range: 5 ... 300 s

Note

The delay time ends when the voltage is disconnected. The time-delayed contacts change switch position.

Parameterizing "without cross-circuit detection":

If "without cross-circuit detection" is set on the device, inputs IN1 and IN2 are not checked for cross-circuits. Inputs IN1 and IN2 then no longer have to be supplied from clock outputs T1 or T2, but can also be supplied from a + 24 V DC signal, for example, from the same current source from which the device is supplied.

The clock outputs are never switched off, because they are also required for the PAR and INF inputs.

Note

Observe the following during commissioning of the 3SK1 Advanced safety relays:

The cascading input must be jumpered if it is not to be used.

Monitoring of the feedback circuits is not optional.

5.2.6 3SK1121 Advanced basic unit instantaneous (with relay outputs)

5.2.6.1 Device features

MLFB:

3SK1121-xAB40	24 V DC

(x) 1 = screw-type terminal; 2 = push-in terminal

5.2.6.2 Function description

The 3SK1121 Advanced basic unit has three safety-related relay enabling circuits and one non-safety-related signaling circuit.

5.2.6.3 Design

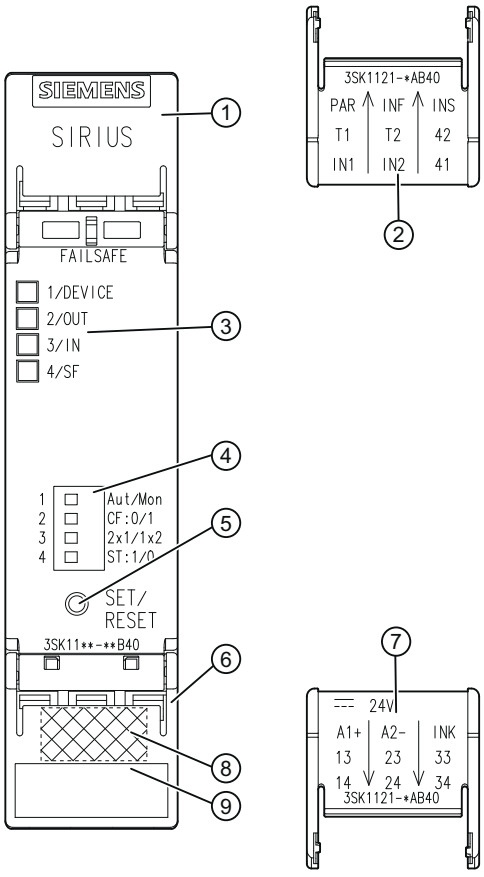

① Top cover flap
② Top cover flap; internal inscription
③ Display LEDs
④ DIP switch
⑤ SET/RESET button
⑥ Bottom cover flap
⑦ Bottom cover flap; internal inscription
⑧ DataMatrix code
⑨ Device identification label

5.2.6.4 Terminal assignment

Terminal	Explanation
A1	+
A2	-
IN1	Sensor channel 1
IN2	Sensor channel 2
PAR	NO contact/NC contact evaluation
INS	START pushbutton circuit
INF	Feedback circuit
INK	Cascading circuit
T1	Test output 1 (for IN1, PAR)
T2	Test output 2 (for IN2, INF)
13 - 14 23 - 24 33 - 34	Enabling circuits (NO, relay contact)
41 - 42	Signaling circuits (NC, relay contact)

State diagram 3SK1121

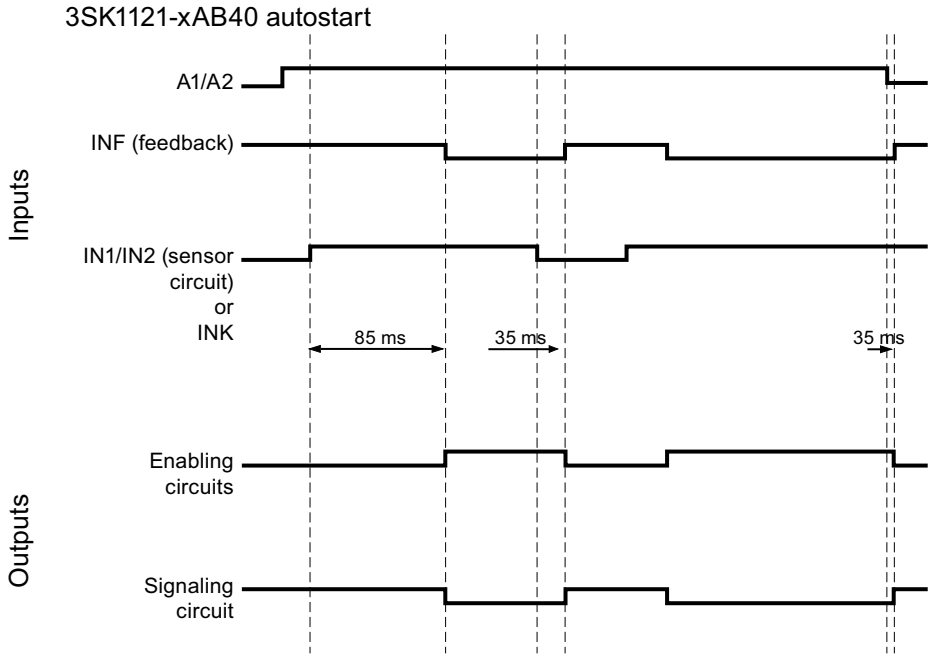

5.2.7 3SK1121 Advanced basic unit time-delayed (with relay outputs)

5.2.7.1 Device features

MLFB:

3SK1121-xCB4y	24 V DC

(x) 1 = screw-type terminal; 2 = push-in terminal
(y) time delay 1 = 0.05 ... 3 s; 2 = 0.5 ... 30 s; 4 = 5 ... 300 s

Additional / alternative device characteristics

- 2 instantaneous enabling circuits (safety-related circuits, NO contacts)
- 2 time-delayed enabling circuits (safety-related circuits, NO contacts)
- Potentiometer for setting the delay time
- Time function: With OFF-delay

5.2.7.2 Design

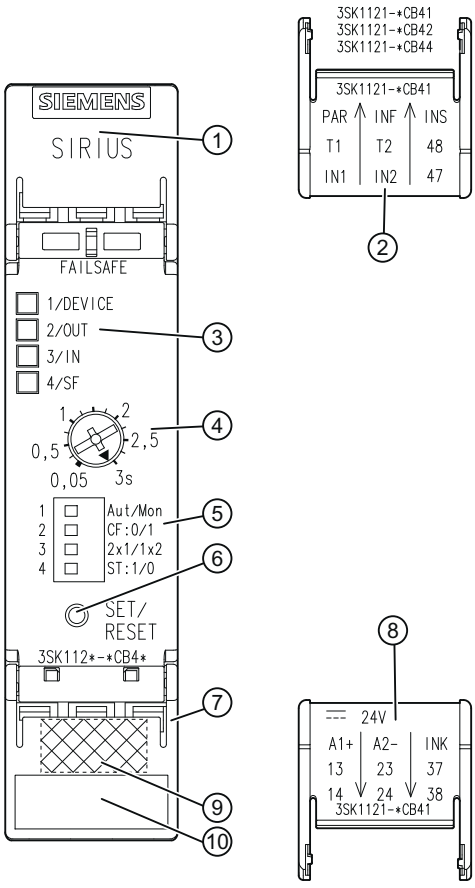

① Top cover flap
② Top cover flap; internal inscription
③ Display LEDs
④ Potentiometer for setting the delay time
⑤ DIP switch
⑥ SET/RESET button
⑦ Bottom cover flap
⑧ Bottom cover flap; internal inscription
⑨ DataMatrix code
⑩ Device identification label

5.2.7.3 Terminal assignment

Terminal	Explanation
A1	+
A2	-
IN1	Sensor channel 1
IN2	Sensor channel 2
PAR	NO contact/NC contact evaluation
INS	START pushbutton circuit
INF	Feedback circuit
INK	Cascading circuit
T1	Test output 1 (for IN1, PAR)
T2	Test output 2 (for IN2, INF)
13 - 14	Instantaneous enabling circuit 1 (NO, relay contact)
23 - 24	Instantaneous enabling circuit 2 (NO, relay contact)
37 - 38	Time delayed enabling circuit 1 (NO, relay contact)
47 - 48	Time delayed enabling circuit 2 (NO, relay contact)

State diagrams 3SK1121-xCB4y

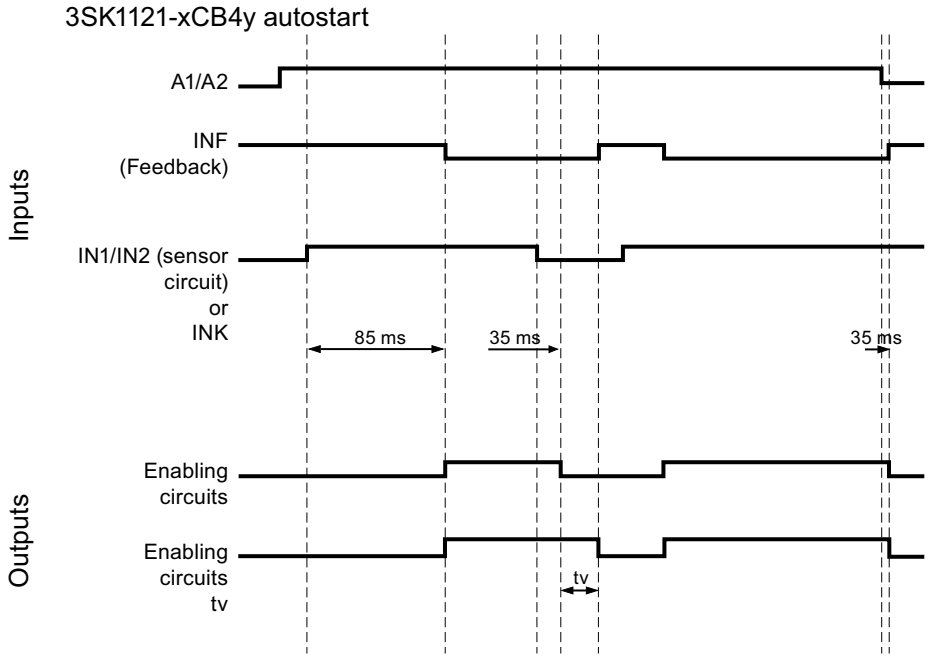

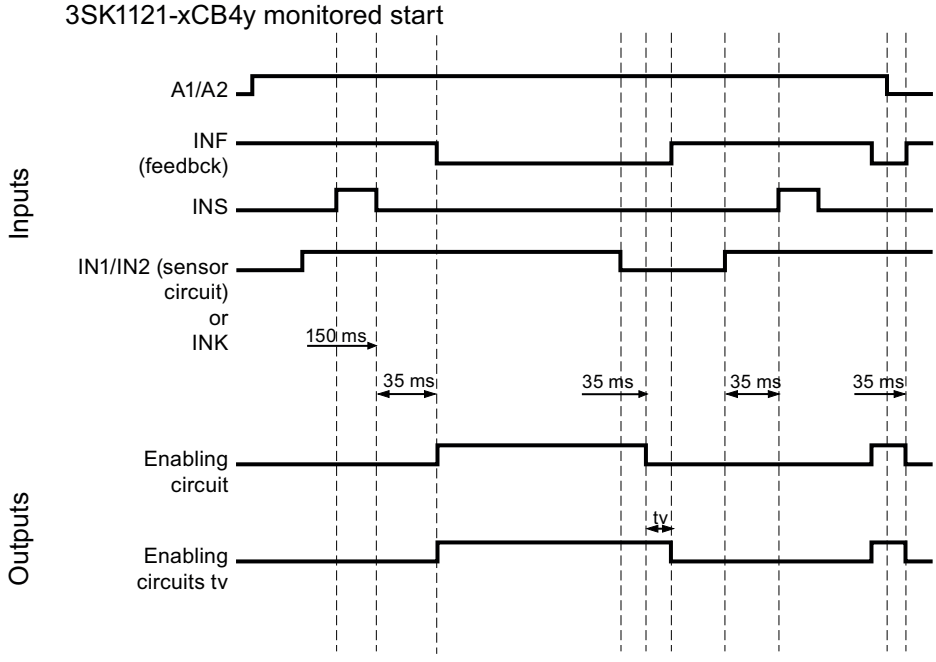

5.2.8 3SK1122 Advanced basic unit instantaneous (with solid-state outputs)

5.2.8.1 Device features

MLFB:

3SK1122-xAB40	24 V DC

(x) 1 = screw-type terminal; 2 = push-in terminal

Additional or alternative device features

- 3 safety-related solid-state outputs
- 1 solid-state signaling circuit

WARNING

In continuous operation for PL e / Cat. 4 in accordance with ISO 13849-1 or SILCL 3 in accordance with IEC 62061, the key safety values apply in the case of a function test interval (state change of the outputs) ≤ 1 year.

5.2.8.2 Design

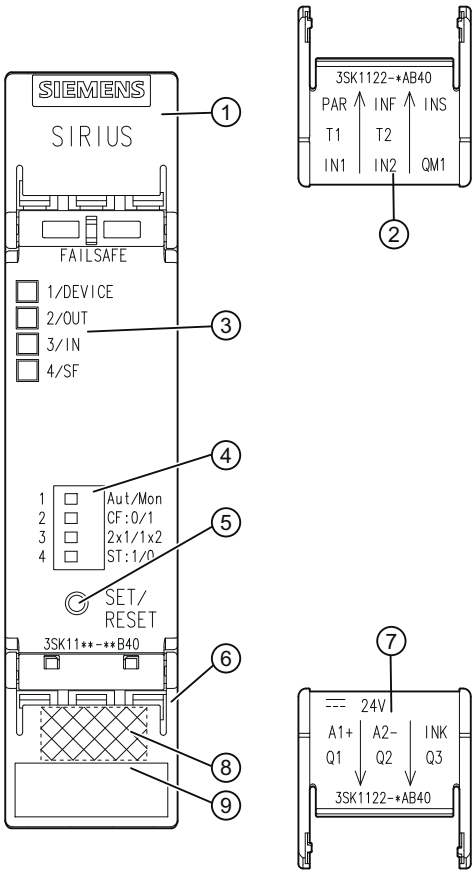

① Top cover flap
② Top cover flap; internal inscription
③ Display LEDs
④ DIP switch
⑤ SET/RESET button
⑥ Bottom cover flap
⑦ Bottom cover flap; internal inscription
⑧ DataMatrix code
⑨ Device identification label

5.2.8.3 Terminal assignment

Terminal	Explanation
A1	+
A2	-
IN1	Sensor channel 1
IN2	Sensor channel 2
PAR	NO contact/NC contact evaluation
INS	START pushbutton circuit
INF	Feedback circuit
INK	Cascading circuit
T1	Test output 1 (for IN1, PAR)
T2	Test output 2 (for IN2, INF)
Q1	Safety-related output 1 (switching to P potential, 24 V DC solid-state)
Q2	Safety-related output 2 (switching to P potential, 24 V DC solid-state)
Q3	Safety-related output 3 (switching to P potential, 24 V DC solid-state)
QM1	Signaling circuit 1 (switching to P potential, 24 V DC solid-state)

State diagrams 3SK1122-xAB40

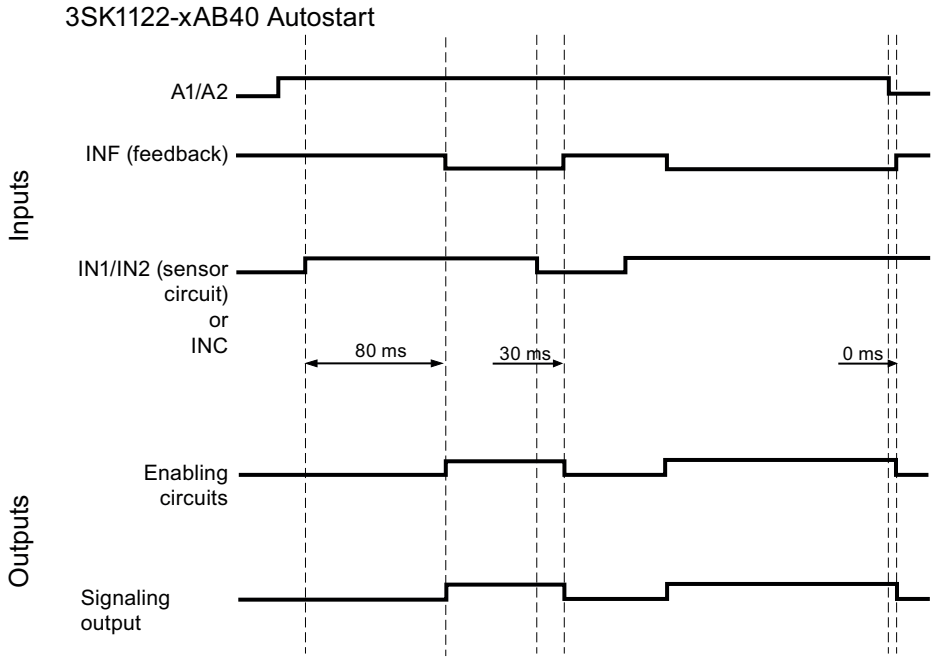

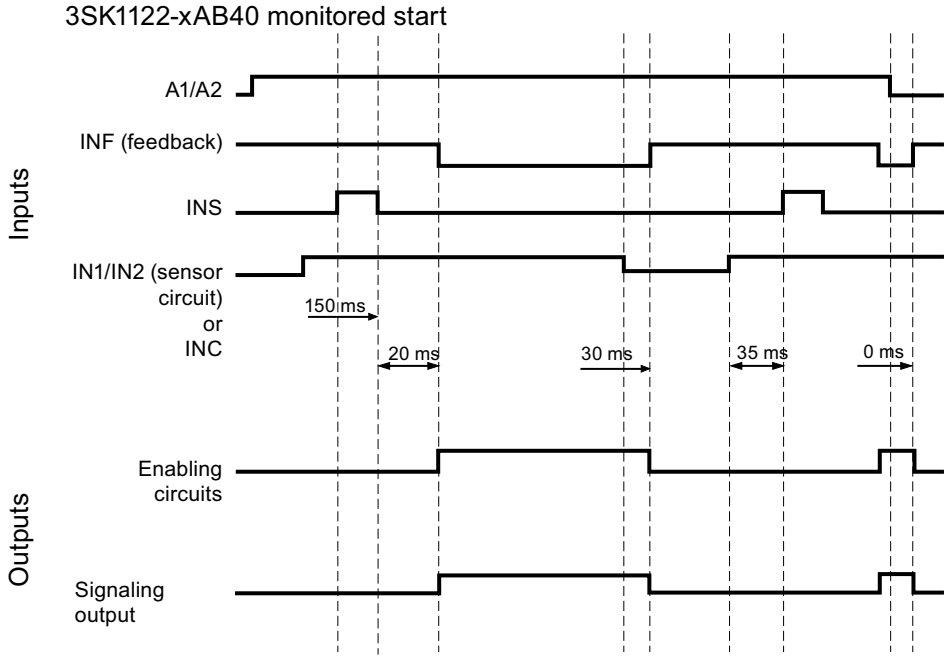

5.2.9 3SK1122 Advanced basic unit time-delayed (with solid-state outputs)

5.2.9.1 Device features

MLFB:

3SK1122-xCB4y	24 V DC

(x) 1 = screw-type terminal; 2 = push-in terminal
(y) time delay 1 = 0.05 ... 3 s; 2 = 0.5 ... 30 s; 4 = 5 ... 300 s

Additional / alternative device characteristics

- 2 instantaneous solid-state outputs
- 2 time-delayed solid-state outputs
- Potentiometer for setting the delay time
- Time function: With OFF-delay

WARNING

Continuous operation

In continuous operation for PL e / Cat. 4 in accordance with ISO 13849-1 or SILCL 3 in accordance with IEC 62061, the key safety values apply in the case of a function test interval (state change of the outputs) ≤ 1 year.

5.2.9.2 Design

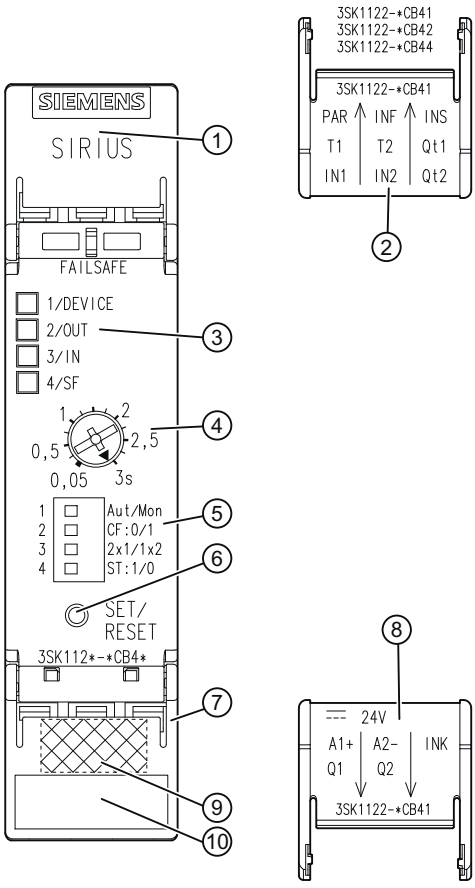

① Top cover flap
② Top cover flap; internal inscription
③ Display LEDs
④ Potentiometer for setting the delay time
⑤ DIP switch
⑥ SET/RESET button
⑦ Bottom cover flap
⑧ Bottom cover flap; internal inscription
⑨ DataMatrix code
⑩ Device identification label

5.2.9.3 Terminal assignment

Terminal	Explanation
A1	+
A2	-
IN1	Sensor channel 1
IN2	Sensor channel 2
PAR	NO contact/NC contact evaluation
INS	START pushbutton circuit
INF	Feedback circuit
INK	Cascading circuit / normal switching duty
T1	Test output 1 (for IN1, PAR)
T2	Test output 2 (for IN2, INF)
Q1	Instantaneous safety-related output 1 (switching to P potential, 24 V DC solid-state)
Q2	Instantaneous safety-related output 2 (switching to P potential, 24 V DC solid-state)
Qt1	Time-delayed safety-related output 1 (switching to P potential, 24 V DC solid-state)
Qt2	Time-delayed safety-related output 2 (switching to P potential, 24 V DC solid-state)

State diagrams 3SK1122-xCB4y

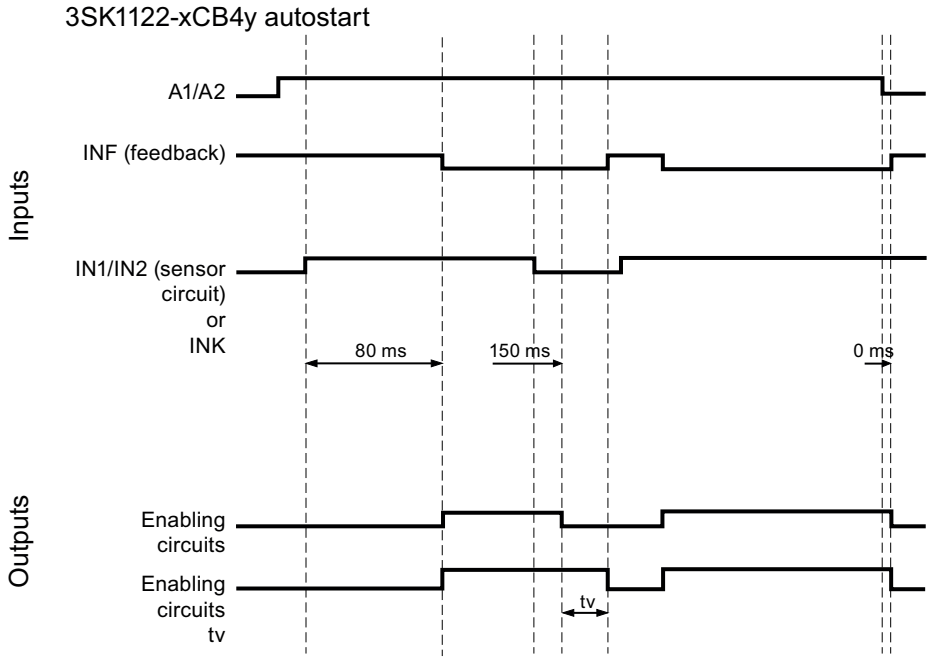

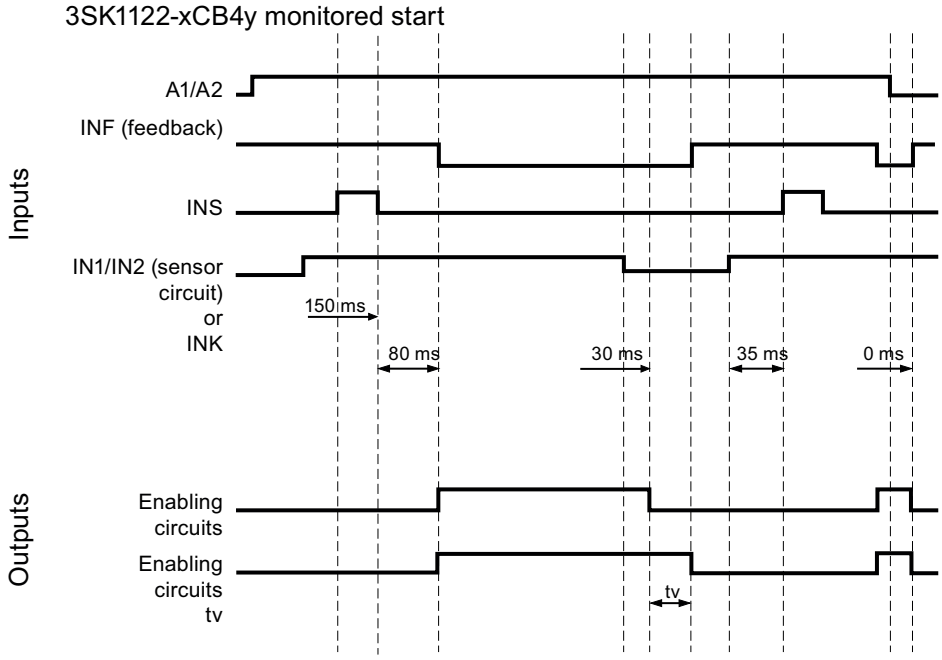

5.2.10 3SK1120 Advanced basic unit instantaneous (with solid-state outputs)

5.2.10.1 Device features

MLFB:

3SK1120-xAB40	24 V DC

(x) 1 = screw-type terminal; 2 = push-in terminal

Additional or alternative device features

- 1 safety-related solid-state output
- The following design variants are possible for the 3SK1120 Advanced basic unit:
  - Operation without using device connectors

WARNING

Operation without using device connectors

In operation without using device connectors, up to PL c / Cat. 2 in accordance with ISO 13849-1 or SILCL 2 in accordance with IEC 62061 can be achieved.

  - Operation using device connectors

Note

In operation using device connectors and using at least one output expansion (3SK1211, 3SK1213), up to PL e / Cat. 4 in accordance with ISO 13849-1 or SILCL 3 in accordance with IEC 62061 can be achieved.

WARNING

In continuous operation for PL e / Cat. 4 in accordance with ISO 13849-1 or SILCL 3 in accordance with IEC 62061, the key safety values apply in the case of a function test interval (state change of the outputs) ≤ 1 year.

5.2.10.2 Design

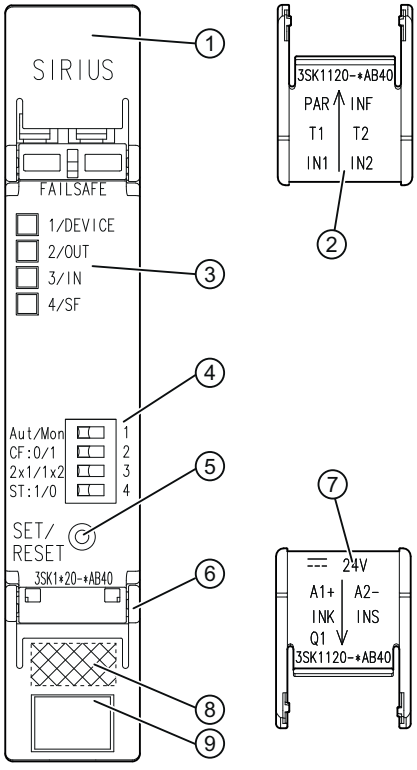

① Top cover flap
② Top cover flap; internal inscription
③ Display LEDs
④ DIP switch
⑤ SET/RESET button
⑥ Bottom cover flap
⑦ Bottom cover flap; internal inscription
⑧ DataMatrix code
⑨ Device identification label

5.2.10.3 Terminal assignment

Terminal	Explanation
A1	+
A2	-
IN1	Sensor channel 1
IN2	Sensor channel 2
PAR	NO contact/NC contact evaluation
INS	START pushbutton circuit
INF	Feedback circuit
INK	Cascading circuit
T1	Test output 1 (for IN1, PAR)
T2	Test output 2 (for IN2, INF)
Q1	Safety-related output 1 (switching to P potential, 24 V DC solid-state)

5.3 3SK1 output expansions

5.3.1 Applications

The 3SK1 output expansions are used to expand the enabling circuits. The maximum achievable Performance Level PL / Cat. in accordance with ISO 13849-1, SILCL in accordance with IEC 62061, SIL in accordance with IEC 61508 corresponds to the Performance Level PL and SIL of the basic unit when the external wiring (connection between basic unit and output expansion) is configured as fail-safe (e.g. basic unit and output expansion are connected using 3ZY12device connector).
The output expansions can be activated via the supply voltage (A1/A2) or using 3ZYdevice connectors[1].

[1] For 24 V DC variant only

Note

Use of the output expansions on device connectors 3ZY

You can switch between instantaneous or delayed control of the basic unit using the slide switch of the output expansion (see also the chapter "System configuration rules (Page 100)").

Note

Using the output expansions with conventional wiring

The slide switch has **no** function here.

If you require outputs of Stop category 1 with the output expansion, terminals A1/A2 of the output expansion must be connected to outputs 38 or 48, and on the 3SK1 basic units they must be connected with relay outputs or Q1t/Q2t.

5.3.2 Function description

The operating state of the 3SK1 output expansions is displayed on the DEVICE LED.

The output expansions 3SK1211(4RO) have four safety-related enabling circuits as NO circuits, and the output expansions 3SK1213 (3RO) have three. They each have one positively-driven NC circuit. The output expansions can be activated via any enabling circuit / output of the basic unit via (A1). The NC circuit 51/52 of 3SK1211 (4RO) or 41/42 of 3SK1213 (3RO) is used for monitoring the output expansions.

In the 24 V DC variants, the expansion units can be activated and evaluated via the 3ZY device connectors.

5.3.3 Display of the operating state

Display of the operating state

The operating state and functioning of the device are indicated by an LED:

- (1) DEVICE

Operating states

LED	State	Meaning
DEVICE	Control supply voltage	Enabling circuits
OFF	OFF	Open
Green	ON	Closed

5.3.4 Function setting

Setting the activation (slide switch only for 24 V variants)

The interface input for activating the output expansion can be selected using a slide switch on the front of the device.

Slide switch	Interface input
Top	Outputs switch with time delay (as in basic unit)
Bottom	Outputs switch instantaneously

When using an instantaneous basic unit, the slide switch must be in the instantaneous position (bottom).

5.3.5 Output expansion 3SK1211

5.3.5.1 Device features

MLFB:

3SK1211-xBB00	24 V AC
3SK1211-xBB40	24 V DC
3SK1211-xBW20	110 ... 240 V AC / DC (wide-range supply)

(x) 1 = screw-type terminal; 2 = push-in terminal

Supply:

24 V AC:

- Activation via 24 V transformer is possible

24 V DC:

- An SELV / PELV power supply must be used for the infeed

110 ... 240 V AC/DC:

- Direct line supply connection L/N

Device properties:

- Slide switch for selecting the activation type (time-delayed / instantaneous)*
- 1 LED for status display
- 4 enabling circuits (safe circuits, NO contacts)
- 1 NC circuit as feedback contact for output expansion 3SK1211 to the up-circuit basic unit
- 3ZY device connectors*
- Enclosure width 22.5 mm
- Removable terminals

* For 24 V DC variant only

5.3.5.2 Design of 3SK1211-.B..0

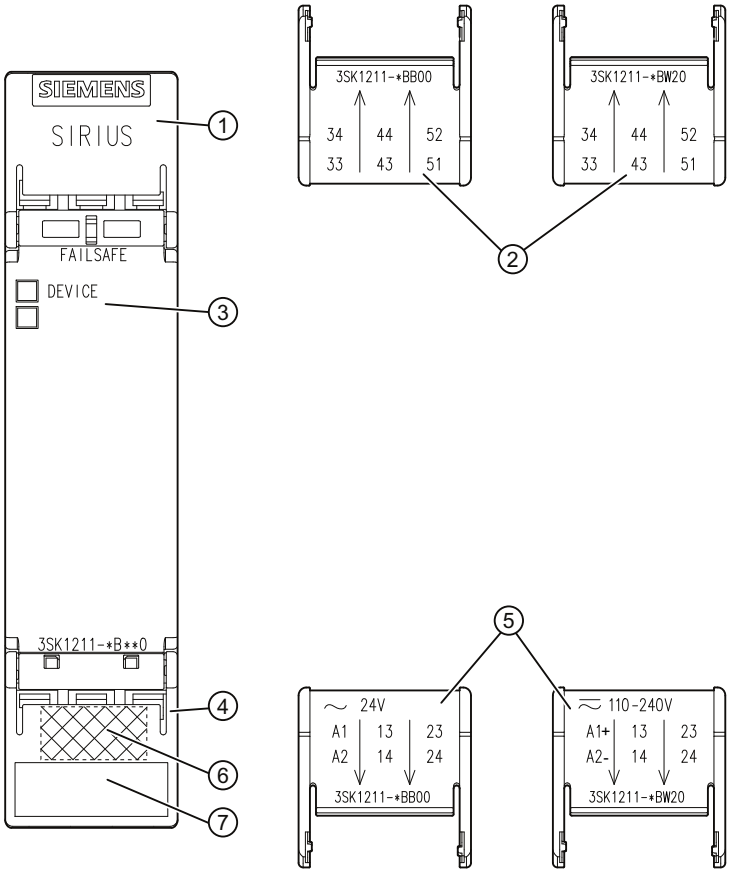

① Top cover flap
② Top cover flap; internal inscription
③ Display LEDs
④ Bottom cover flap
⑤ Bottom cover flap; internal inscription
⑥ DataMatrix code
⑦ Device identification label

5.3.5.3 Design of 3SK1211-.BB40

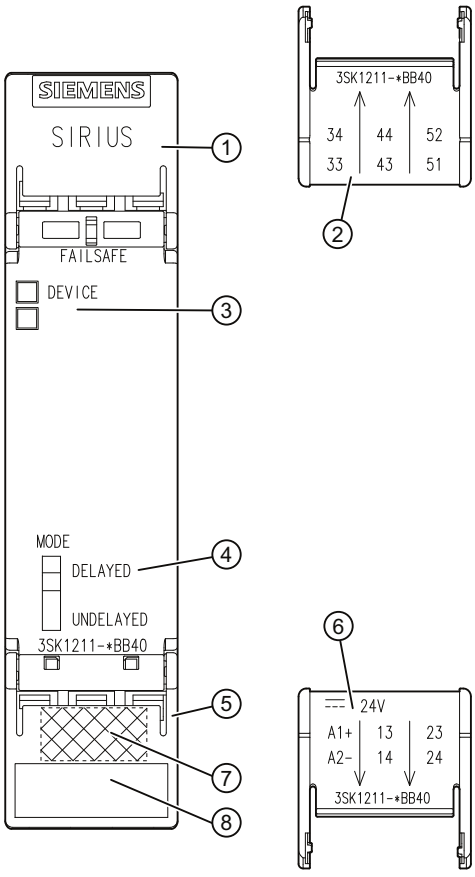

① Top cover flap
② Top cover flap; internal inscription
③ Display LEDs
④ Slide switch
⑤ Bottom cover flap
⑥ Bottom cover flap; internal inscription
⑦ DataMatrix code
⑧ Device identification label

5.3.5.4 Terminal assignment

Terminal	Explanation
A1	+ (L+ for 3SK1211-.BW20)
A2	- (N- for 3SK1211-.BW20)
13 - 14	Enabling circuit 1 (NO, relay contact)
23 - 24	Enabling circuit 2 (NO, relay contact)
33 - 34	Enabling circuit 3 (NO, relay contact)
43 - 44	Enabling circuit 4 (NO, relay contact)
51 - 52	NC circuit as feedback contact (NC, relay contact)

5.3.6 Output expansion 3SK1213

5.3.6.1 Device features

MLFB:

3SK1213-xAB40	24 V DC
3SK1213-xAJ20	115 V AC
3SK1213-xAL20	230 V AC

(x) 1 = screw-type terminal; 2 = spring-loaded terminal

Supply:

24 V DC:

- An SELV / PELV power supply must be used for the infeed

115 V AC and 230 V AC

- Direct line supply connection L/N

Device properties:

- Slide switch for selecting the activation type (time-delayed / instantaneous)*
- 1 LED for status display
- 3 enabling circuits (safe circuits, NO contacts)
- 1 NC circuit as feedback contact for output expansion 3SK1213 for the up-circuit basic unit
- 3ZY device connectors*
- Enclosure width 90 mm
- Removable terminals

* For 24 V DC variant only

When using 3ZY device connectors

The output expansion 3SK1213 must always be terminated with a device termination connector, type 2, set for enclosures > 45 mm (3ZY1212-0FA01). Expansion on the right-hand side is then no longer possible.

5.3.6.2 Design of 3SK1213-.AB40

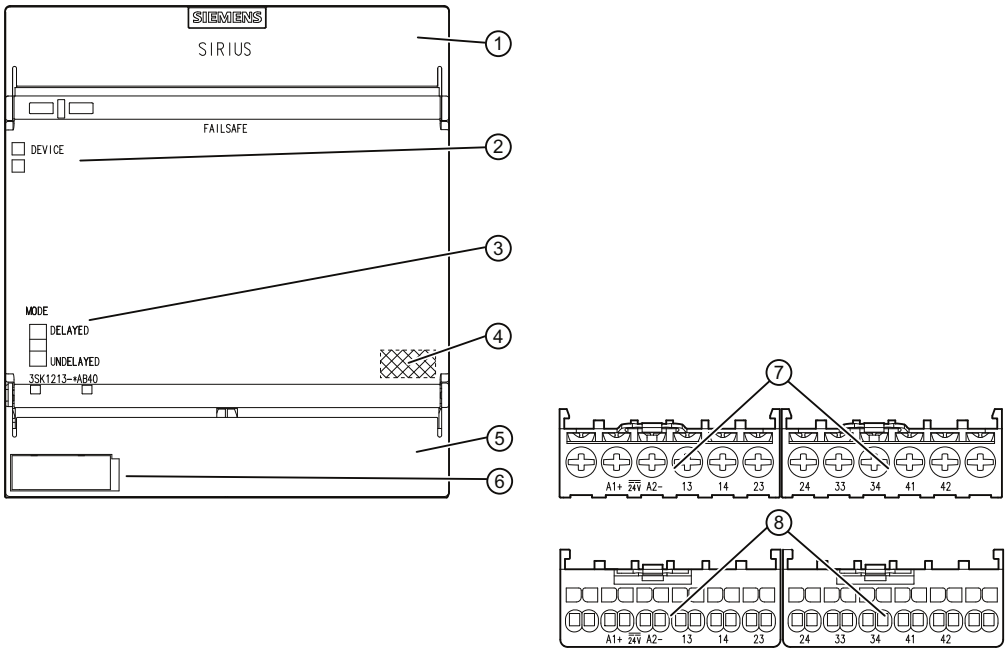

① Top cover flap
② Display LEDs
③ Slide switch
④ DataMatrix code
⑤ Bottom cover flap
⑥ Device identification label
⑦ Screw-type terminals
⑧ Spring-loaded terminals

5.3.6.3 Design of 3SK1213-.A.20

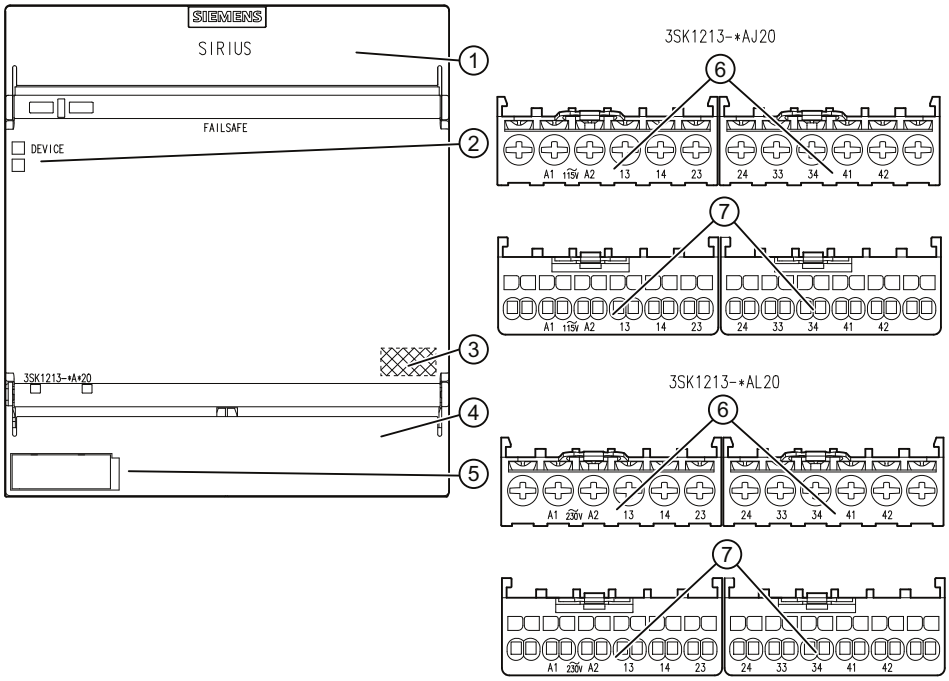

① Top cover flap
② Display LEDs
③ DataMatrix code
④ Bottom cover flap
⑤ Device identification label
⑥ Screw-type terminals
⑦ Spring-loaded terminals

5.3.6.4 Terminal assignment

Terminal	Description
A1	+
A2	-
13 - 14	Enabling circuit 1 (NO, relay contact)
23 - 24	Enabling circuit 2 (NO, relay contact)
33 - 34	Enabling circuit 3 (NO, relay contact)
41 - 42	NC circuit as feedback contact (NC, relay contact)

5.4 3SK1 input expansions

5.4.1 Input expansion 3SK1220

5.4.1.1 Device features

MLFB:

3SK1220-xAB40	24 V DC

(x) 1 = screw-type terminal; 2 = push-in terminal

Device properties:

- 4-way DIP switch for function setting (parameterization)
- NO contact/NC contact evaluation via external jumper
- SET/RESET button
- 4 LEDs for status and function display
- 1 input (ON button circuit)
- 2 test outputs
- Enclosure width 17.5 mm
- Removable terminals
- Mounting exclusively on 3ZY12 device connectors

5.4.1.2 Applications

The number of sensor inputs for a basic unit can be expanded using input expansions. Input expansions must always be mounted to the left of a basic unit.

The input expansion 3SK1220 is certified to SIL 3 / PL e.
The SILCL / PL achieved by the overall system depends on the external connection of sensors and actuators.
The input expansion 3SK1220 is supplied via the 3ZY12 device connectors.

5.4.1.3 Design

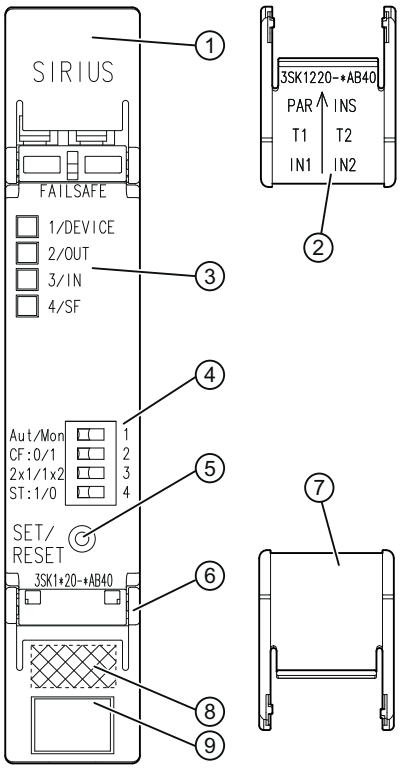

① Top cover flap
② Top cover flap; internal inscription
③ Display LEDs
④ DIP switch
⑤ SET/RESET button
⑥ Bottom cover flap
⑦ Bottom cover flap; internal inscription
⑧ DataMatrix code
⑨ Device identification label

5.4.1.4 Terminal assignment

Terminal	Explanation
IN1	Sensor channel 1
IN2	Sensor channel 2
PAR	NO contact/NC contact evaluation
INS	ON button circuit
T1	Test output 1 (for IN1, PAR)
T2	Test output 2 (for IN2, INF)

5.4.1.5 Display of the operating state

Display of the operating state

You can find additional information on this under "Advanced" in the Chapter Function description (Page 57).

5.4.1.6 Function setting

DIP switch settings

You can find additional information on this under "Advanced" in the Chapter Functions (Page 58).

State diagrams 3SK1220

3SK1220 Autostart

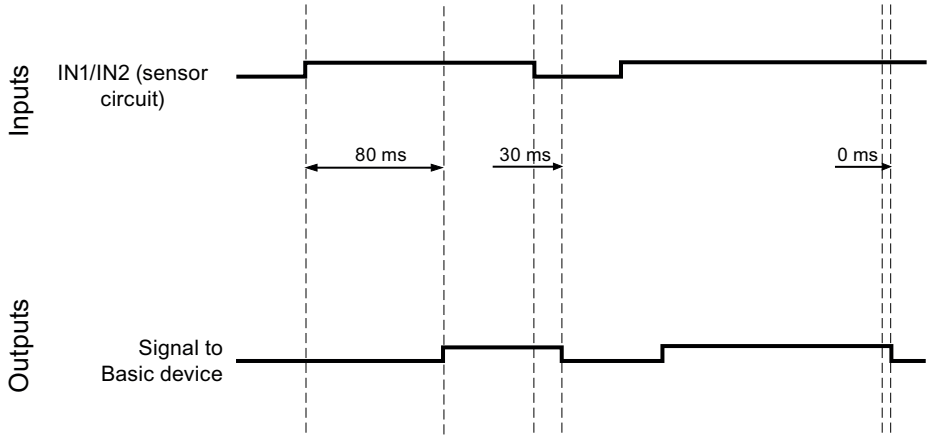

3SK1220 monitored start

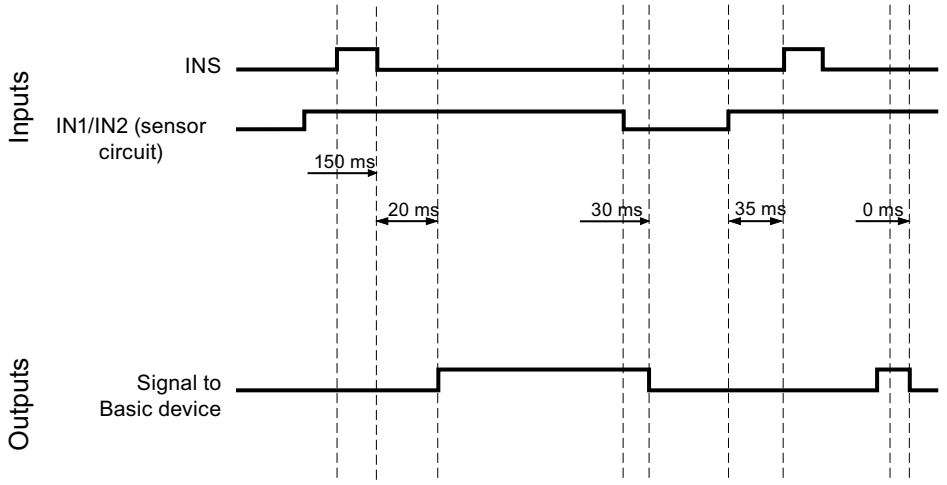

5.4.2 Power supply 3SK1230

5.4.2.1 Device features

MLFB:

3SK1230-xAW20	110 ... 240 V AC/DC

(x) 1 = screw-type terminal; 2 = push-in terminal

Device properties:

- Wide-range input: 110 ... 240 V AC/DC
- Rated output voltage: 24 V DC
- Rated output current: 0.6 A
- 1 LED for status display
- Connection interface
- Enclosure width 22.5 mm
- Removable terminals

Note

Due to the output current of the power supply 3SK1230 (= 0.6 A), the use of 3SK1 basic units with solid-state **outputs** is only possible to a limited extent. The output current of all semiconductor outputs can be **up to 0.4 A** here (depending on the system configuration).

5.4.2.2 Applications

The power supply 3SK1230 generates a stabilized output voltage of 24 V DC from 110 ... 240 V AC/DC. The 3SK1230 power supply can supply the 3SK1 Advanced device series with 24 V DC via 3ZY device connectors or via the +/– output terminals.

The START pushbutton input "INS" of the 3SK1 device series must be supplied from the 3SK1230 power supply.

NOTICE
Two power supplies in parallel are not permissible! Only one 3SK1230 is permitted per system configuration.

5.4.2.3 Design

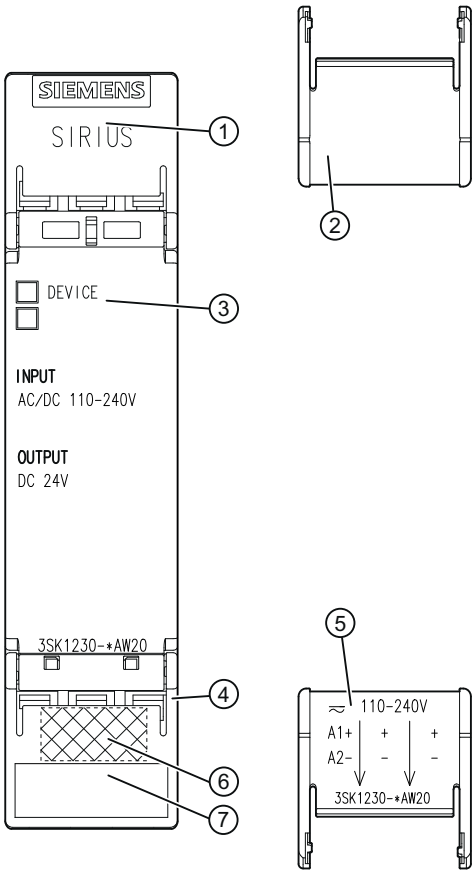

① Top cover flap
② Top cover flap; internal inscription
③ Display LEDs
④ Bottom cover flap
⑤ Bottom cover flap; internal inscription
⑥ DataMatrix code
⑦ Device identification label

5.4.2.4 Terminal assignment

Terminal	Explanation
A1	L+
A2	N-
+	+24 V DC
+	+24 V DC
-	- Mass
-	- Mass

5.4.2.5 Display of the operating state

Display of the operating state

The operating state and functioning of the device are indicated by an LED:

- (1) DEVICE

Operating states

LED	State	Meaning
DEVICE	Green	Output voltage OK
	Flashing	Overload
	OFF	No voltage

System configuration 6

6.1 General information

6.1.1 General notes on the Standard system

- Expanding enabling circuits using external wiring.
- Output expansions must be activated via a safe enabling circuit/output of the basic unit.
- The NC circuit (51/52 for 3SK1211; 41/42 for 3SK1213) of the output expansion must be looped into the feedback circuit (T2/INF) of the basic unit.

6.1.2 General information on the Advanced system

- Expandable using 3ZY12 device connector on both input and output side.
- The output expansions are activated and the feedback circuit is evaluated via the connection interface.
- When using the Advanced device series with output expansion on the device connector described, all enabling and signaling circuits of the basic unit and output expansion can be used as required.
- The input expansions, as well as the output expansions mounted on the 3ZY12 device connector, are supplied with voltage via the 3ZY12 device connector. The supply voltage is only connected once on the basic unit (24 V DC) or the 3SK1230 power supply (110 ... 240 V AC/DC).

6.1.3 Maximum system configuration

Changes to the system configuration

Changes to the system configuration in safety mode always result in a device error. Restarting, by disconnecting and reconnecting the operating voltage (Power OFF/ON), is a mandatory requirement.

Maximum system configuration when supplying with 24 V DC on the basic unit

⚠ WARNING
Only one 3SK1 basic unit is permitted per system The safety function is not guaranteed when more than one basic unit is used.

Connection of 24 V DC to the basic unit:
up to 5 expansions are permitted to the left of the basic unit and 5 expansions are permitted on the right.

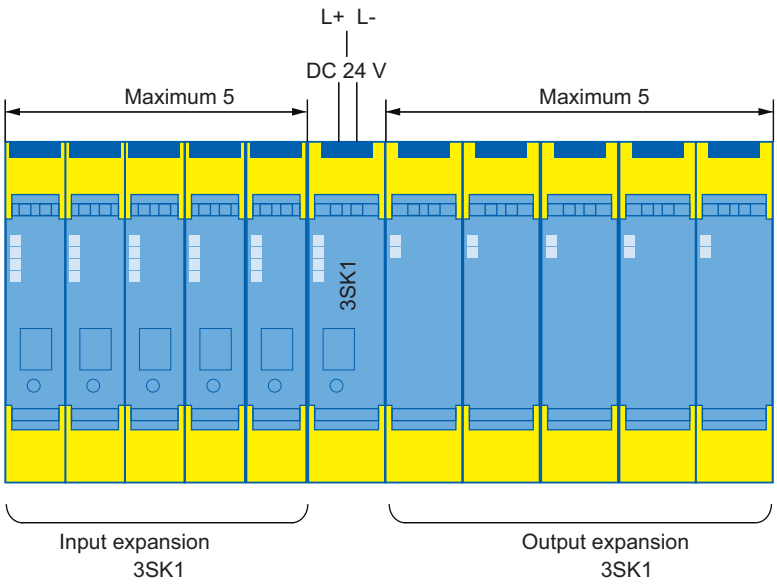

Maximum system configuration when supplying with 24 V DC using the 3SK1230 power supply

When using the 3SK1230 power supply, the maximum system configuration can be calculated as follows:
Up to 10 "system units" can be connected to a 3SK1230 power supply.
Individual devices occupy a different number of system units.

Note

With this configuration too, up to 5 expansions are permitted to the left of the basic unit and 5 expansions are permitted on the right.

Device	System unit
Input expansion 3SK1220	1
Power supply 3SK1230	0
Basic units 3SK1	0
Output expansion 3SK1211	2
Output expansion 3SK1213	2

Example 1x 3SK1230 power supply; 5 x 3SK1220 input expansion; 1 x 3SK1 basic unit; 2 x 3SK121 output expansion

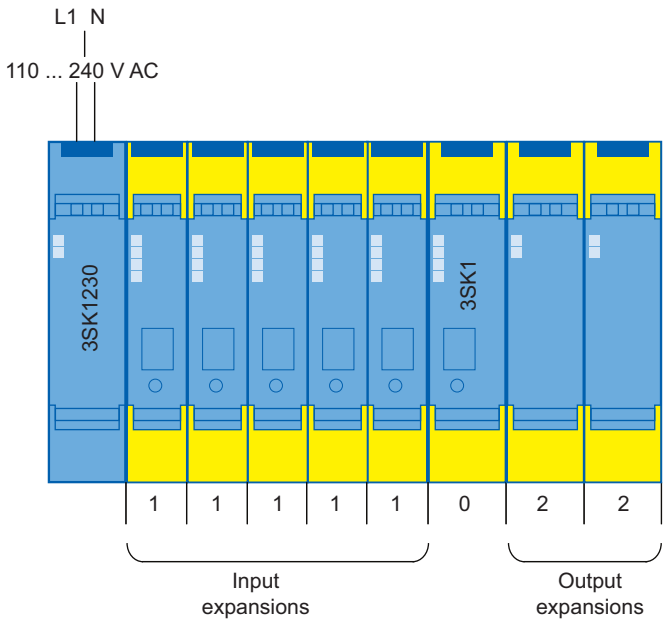

6.2 3ZY12 device connector

6.2.1 Device features

MLFB:

MLFB	Type of device connector
3ZY1212-1BA00	Device connector, type 1, 17.5 mm
3ZY1212-2BA00	Device connector, type 1, 22.5 mm
3ZY1212-2DA00	Device termination connector, type 1, 22.5 mm
3ZY1212-2EA00	Device connector, type 2, 22.5 mm
3ZY1212-2FA00	Device termination connector, type 2, 22.5 mm
3ZY1212-0FA01	Device termination connector, type 2, set for enclosures > 45 mm

Use of device connectors

- A device connector is always required when a basic unit is expanded using input or output expansions.
- A device termination connector is always required in the system for the last module on the right.

The following device connectors are required for the various enclosure widths of the Advanced device series:

Devices	Device connector, type 1, 17.5 mm 3ZY1212-1BA00	Device connector, type 1, 22.5 mm 3ZY1212-2BA00	Device termination connector, type 1, 22.5 mm 3ZY1212-2DA00
Basic units 3SK1 Advanced			
3SK1121	-	x	x
3SK1122	-	x	x
3SK1120	x	-	-
Output expansions 3SK1			
3SK1211 (4RO)	-	x	x
3SK1213 (3RO)	-	-	-
Input expansions 3SK1			
3SK1220	x	-	-
Power supply 3SK1230	-	x	-

Devices	Device connector, type 2, 22.5 mm 3ZY1212-2EA00	Device termination connector, type 2, 22.5 mm 3ZY1212-2FA00	Device termination connector, type 2 set for enclosures > 45 mm 3ZY1212-0FA01
Basic units 3SK1 Advanced			
3SK1121	-	-	-
3SK1122	-	-	-
3SK1120	-	-	-
Output expansions 3SK1			
3SK1211 (4RO)	-	-	-
3SK1213 (3RO)	-	-	x
Input expansions 3SK1			
3SK1220	-	-	-
Power supply 3SK1230	-	-	-

Note

If a basic unit is expanded on the right-hand side, the final output expansion must be terminated with a device termination connector of type 1 (basic unit, output expansion 3SK1211)) or device termination connector of type 2 (output expansion 3SK1213).

If a basic unit is only expanded on the left-hand side, a device termination connector of type 1 must be mounted below the basic unit.

6.2.2 Applications

The Advanced basic unit can be expanded on the input and output side using device connectors (connecting plugs) without any additional wiring outlay. When configuring the system, it is important to ensure that input expansions are connected on the left and output expansions on the right of a basic unit.

6.3 System configuration rules

- Input expansions and the 3SK1230 power supply must always be connected on the left of the basic unit and output expansions on the right.
- The 3SK1230 power supply must always be plugged into the system on the extreme left.
- If a 3SK1230 power supply is used, no additional, external 24 V DC voltage is permitted to be connected to a basic unit.
- If an input expansion is detected on the left when the device powers up, this will be loaded into the device configuration. The cascading input image is then activated in safety mode and ANDed with the sensor states.
- An input expansion evaluates the sensor states and generates an enable signal for the basic unit depending on the start condition. The enable signal is then acquired by an input expansion on the right-hand side, or acquired by the basic unit and ANDed with its sensor statuses.
- Device termination connector type 1:
  - Below basic unit: the switch of the device termination connector must be open, i.e. in position 2 at the bottom.
  - Below 3SK1211 output expansion: the switch of the device termination connector must be closed, i.e. in position 1 at top.
- The 3ZY12 device connector used below the final device must be fitted with a cover on the left side (supplied with the device termination connectors).
- If an output expansion is detected on the right when the device powers up, this will be loaded into the device configuration. The internal feedback circuit of the contact extension is evaluated and checked.
- An Advanced basic unit controls the output expansions via the 3ZY12 device connector.
- If an output expansion is used, a device termination connector of type 1 must ALWAYS be used under the final device on the right (for 3SK1211) with the switch setting: "1" (switch upwards), or type 2 (for 3SK1213)
- If the 3SK1213 output expansion is used in the system, this must always be the final station in the system (on the right) and must be fitted with a 3ZY1212-0FA01 device termination connector. Only one 3SK1213 output expansion can be used in a system with a device connector.
- The output expansion (instantaneous) is activated via a safety-related channel.
- The output expansion (time-delayed) is activated via a safety-related channel.
- If a basic unit is operated as a stand-alone device, no device connector or device termination connector is necessary.

- If an output expansion is not detected on powering up, the internal feedback circuit will not be evaluated.
- In the case of a change to the device configuration during operation, error mode is activated immediately. A restart can only take place via a Power OFF/ON.
  All other configuration changes during operation are indicated by LED (DEVICE LED flashes green/yellow).

See also

Accessories (Page 257)

Configuration notes for using device connectors

Device connectors 3ZY12 can only be used with devices of the Advanced device series.

Further configuration notes:

NOTICE
Only one 3SK1 Advanced basic unit is permitted per system The safety function is not guaranteed when more than one basic unit is used.

NOTICE
Supply voltage must only be fed in on the basic unit The supply voltage of 24 V DC must only be fed in on the basic unit, otherwise the safety function is bypassed.

Power supply

- When device connectors are used, only one 3SK1230 power supply is permitted per system.
- The 3SK1230 power supply must always be located on the extreme left.
- If the 3SK1230 power supply is used, an additional (external) 24 V DC connection is not permitted (this also applies for the cascading input, as well as for non-floating sensors).

24 V DC power supply

- It is only permitted to connect a voltage of 24 V DC to the terminals on the basic unit.
- It is not permitted to supply 24 V DC to an expansion component.

Circuit diagrams

7

7.1 Internal circuit diagrams

7.1.1 Internal circuit diagrams for 3SK1 Standard basic units

Basic unit 3SK1111-.AB30 Standard relay instantaneous (24 V)

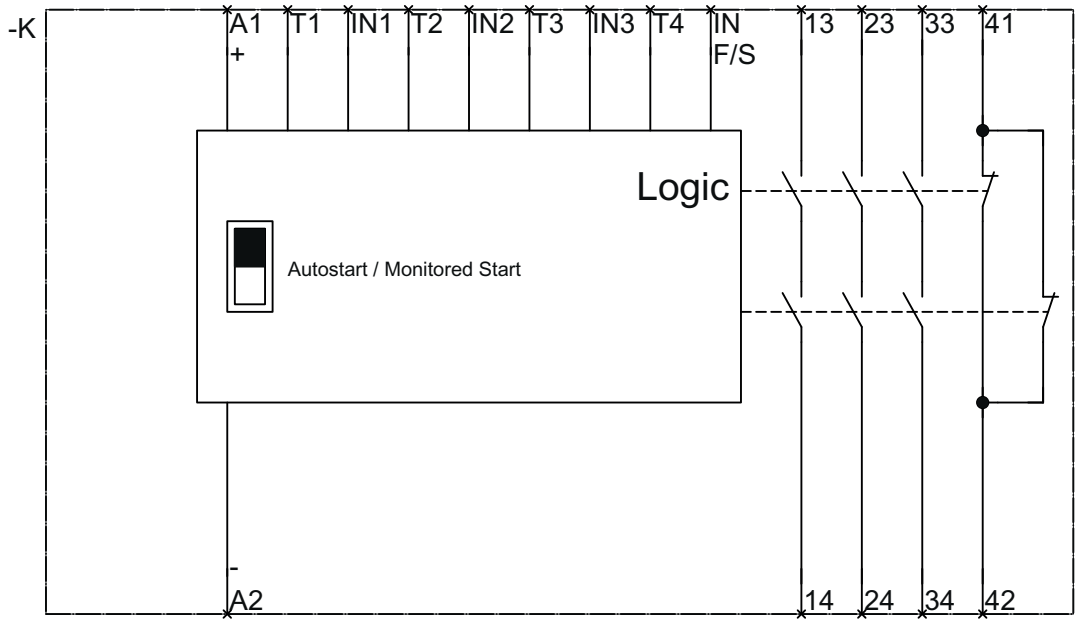

Basic unit 3SK1111-.AW20 Standard relay instantaneous (110 - 240 V)

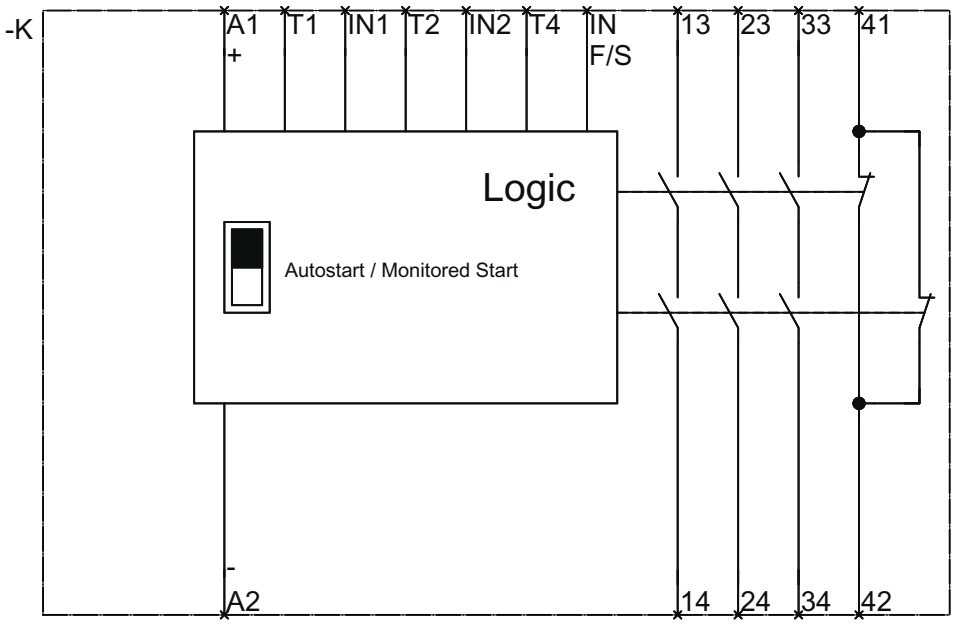

Basic unit 3SK1112-.BB40 Standard solid-state

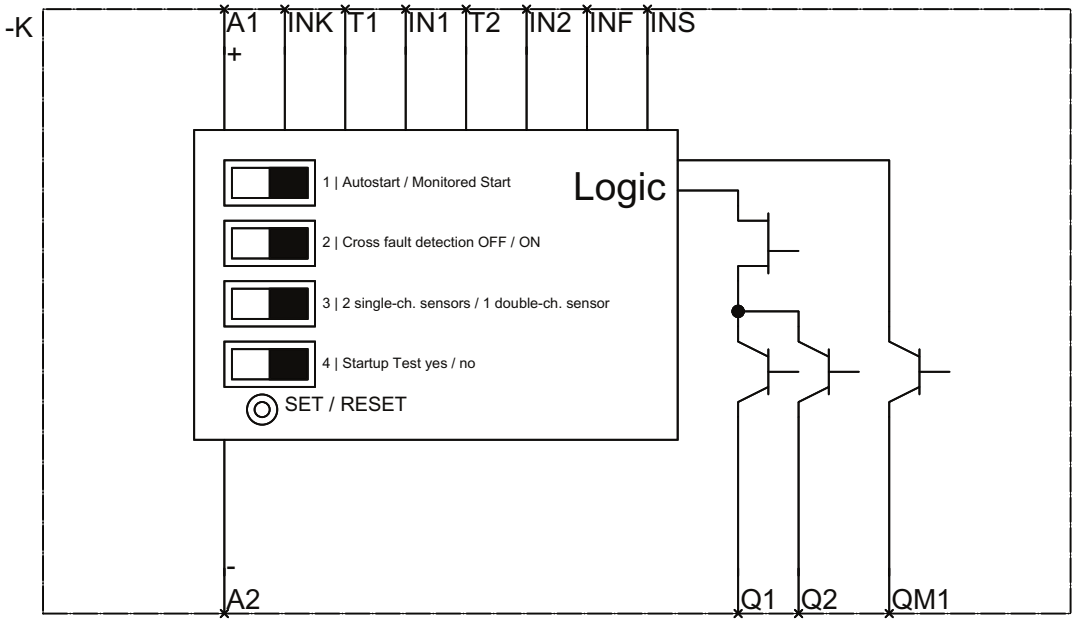

7.1.2 Internal circuit diagrams for 3SK1 Advanced basic units

Basic unit 3SK1121-.AB40 Advanced relay instantaneous

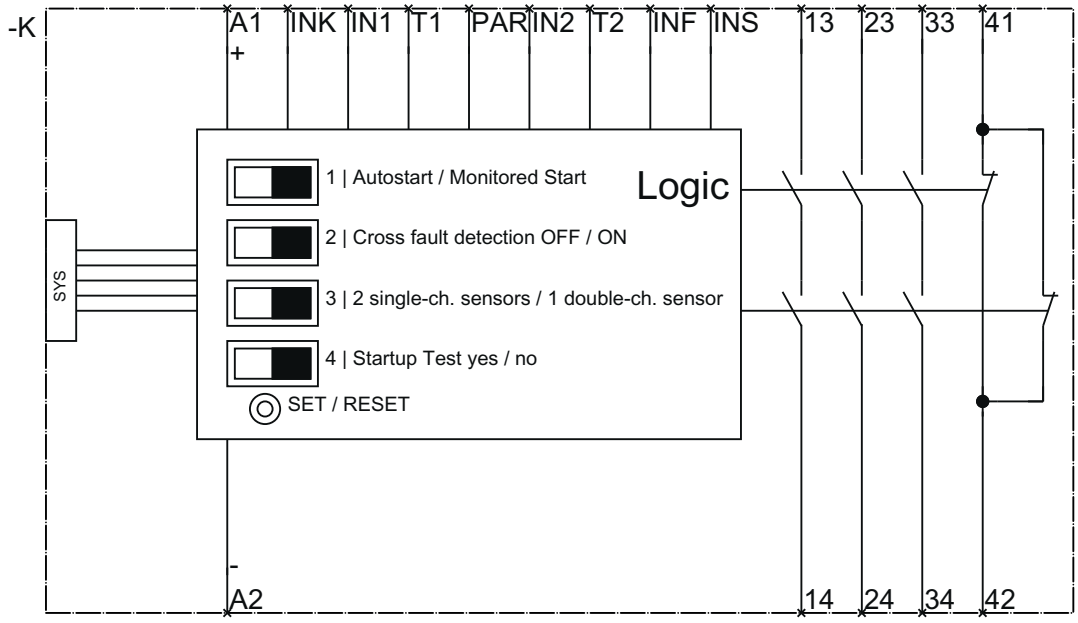

Basic unit 3SK1121-.CB4. Advanced relay time-delayed

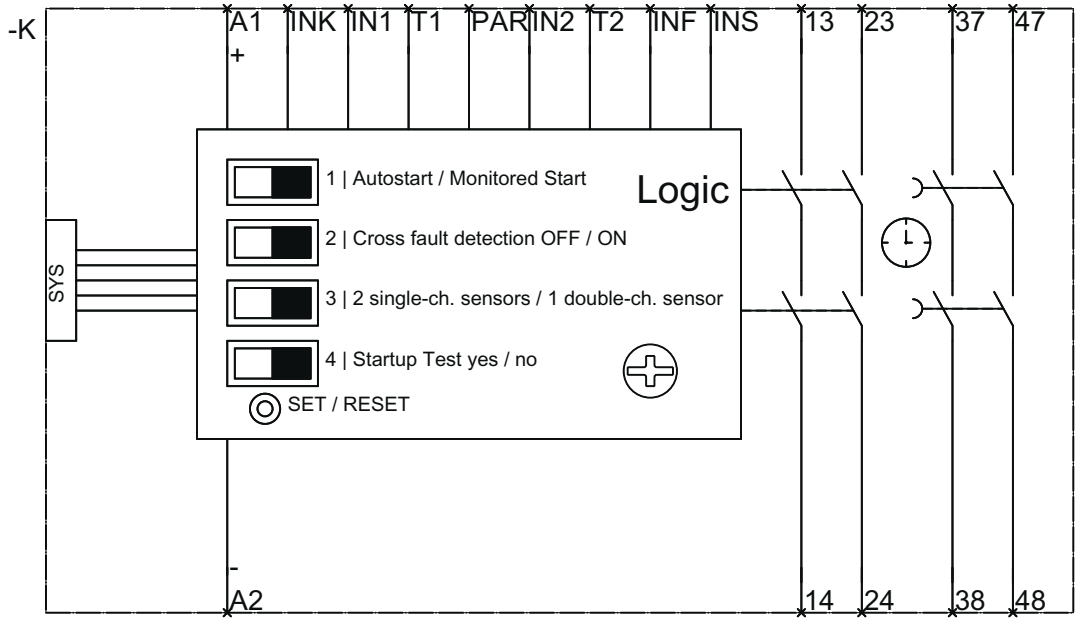

Basic unit 3SK1122-.AB40 Advanced solid-state instantaneous

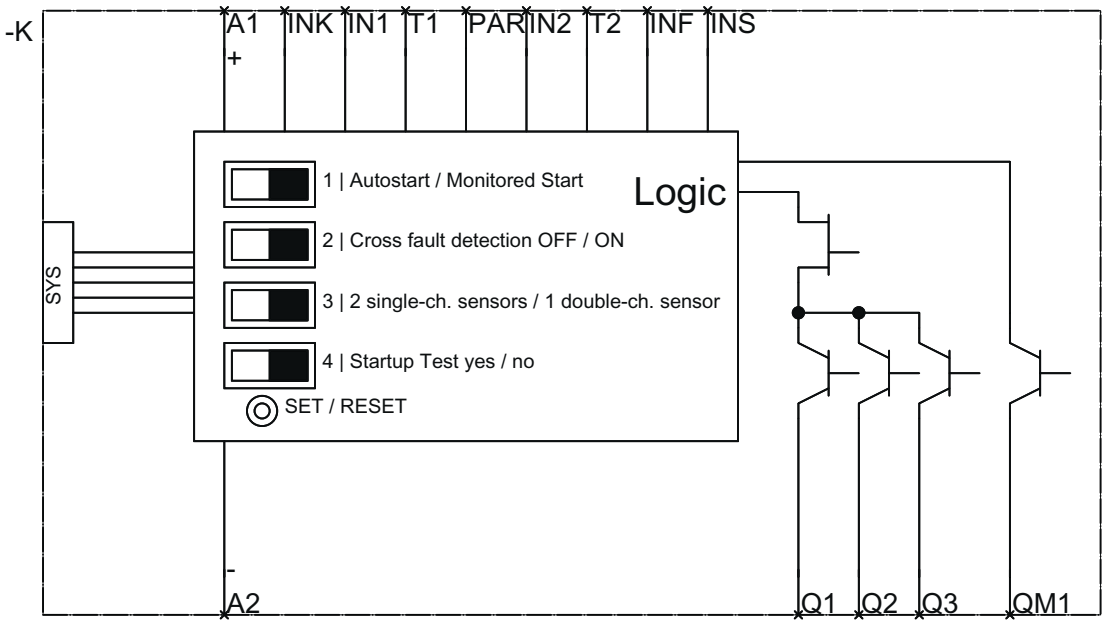

Basic unit 3SK1122-.CB4. Advanced solid-state time-delayed

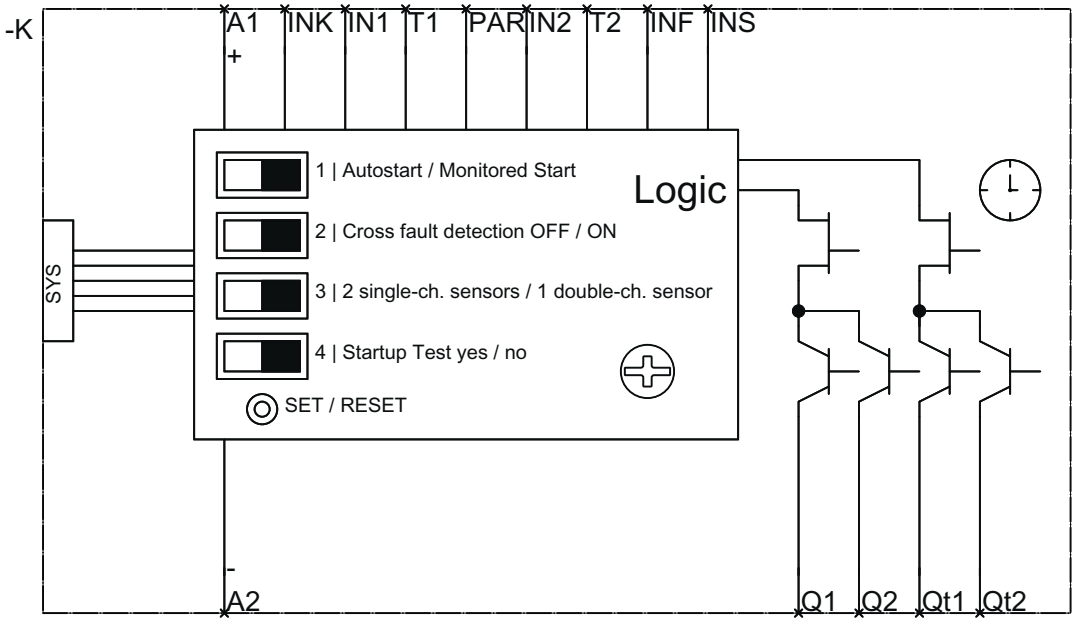

Basic unit 3SK1120-.AB40 Advanced 17.5 mm solid-state instantaneous

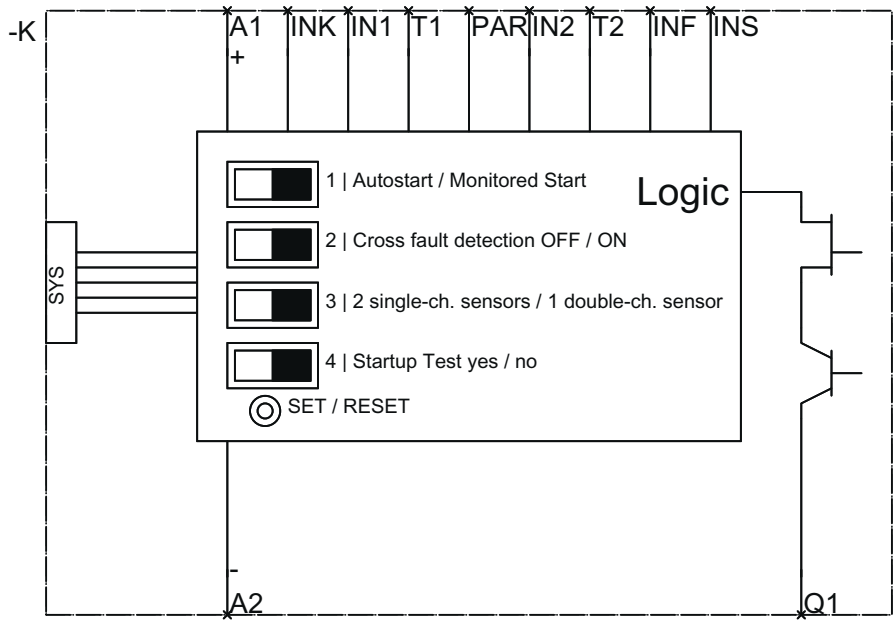

7.1.3 Internal circuit diagrams for expansion units

Output expansion 3SK1211 (110 - 240 V)

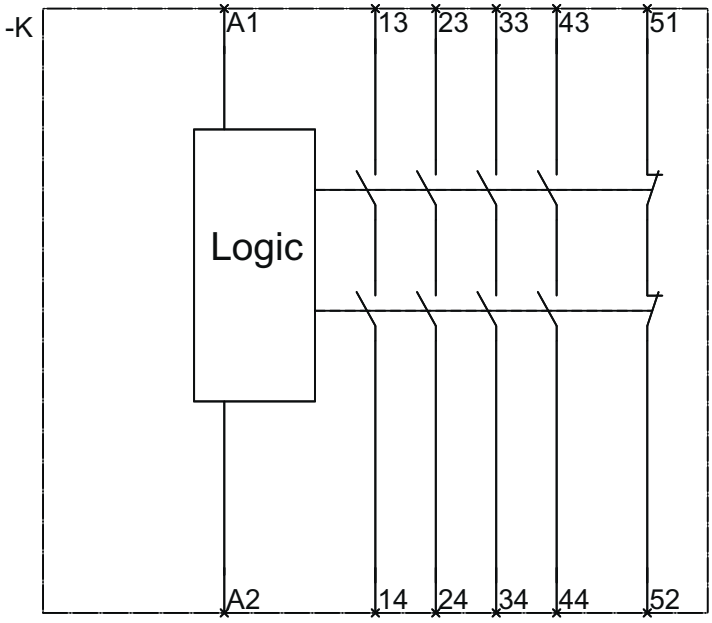

Output expansion 3SK1211 (24 V DC)

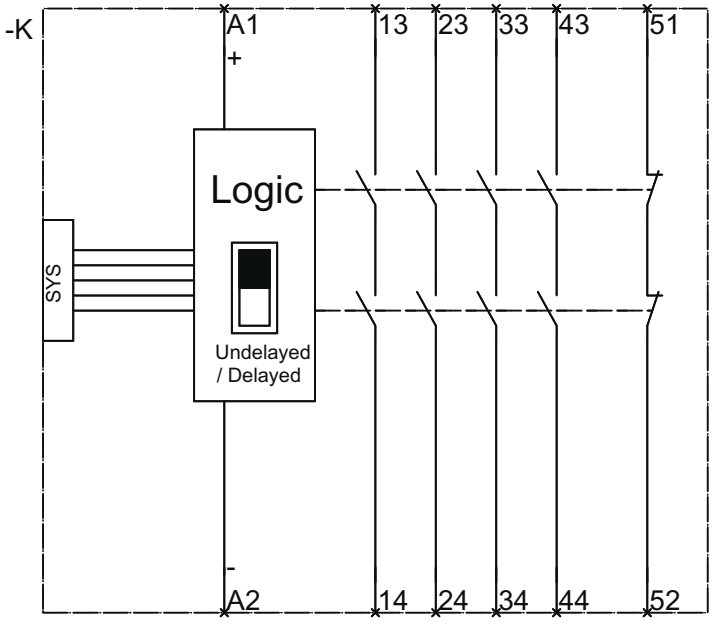

Output expansion 3SK1213

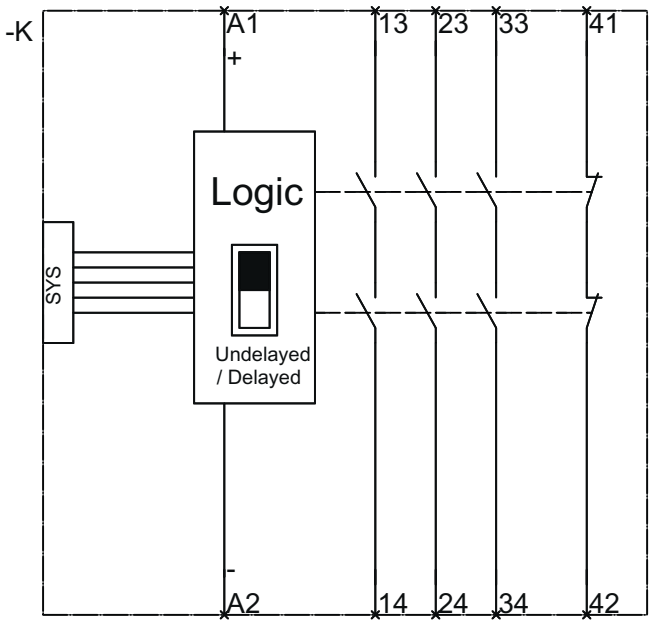

Input expansion 3SK1220

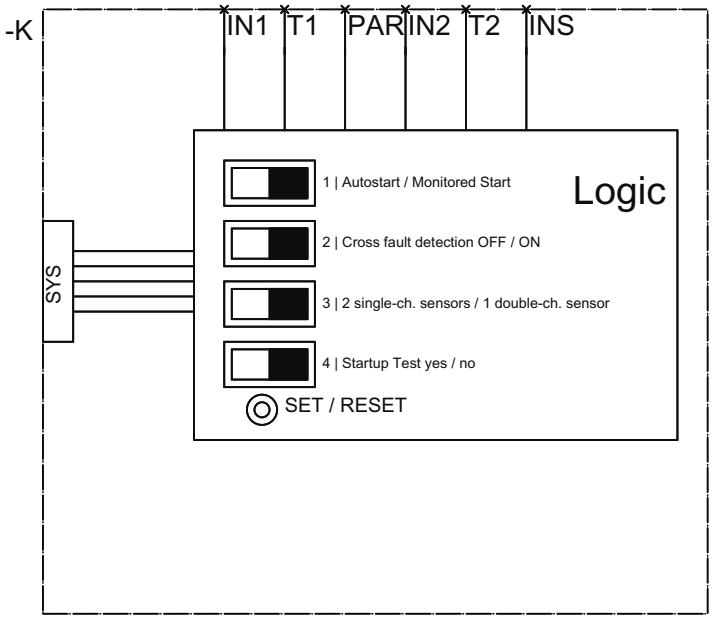

Power supply 3SK1230

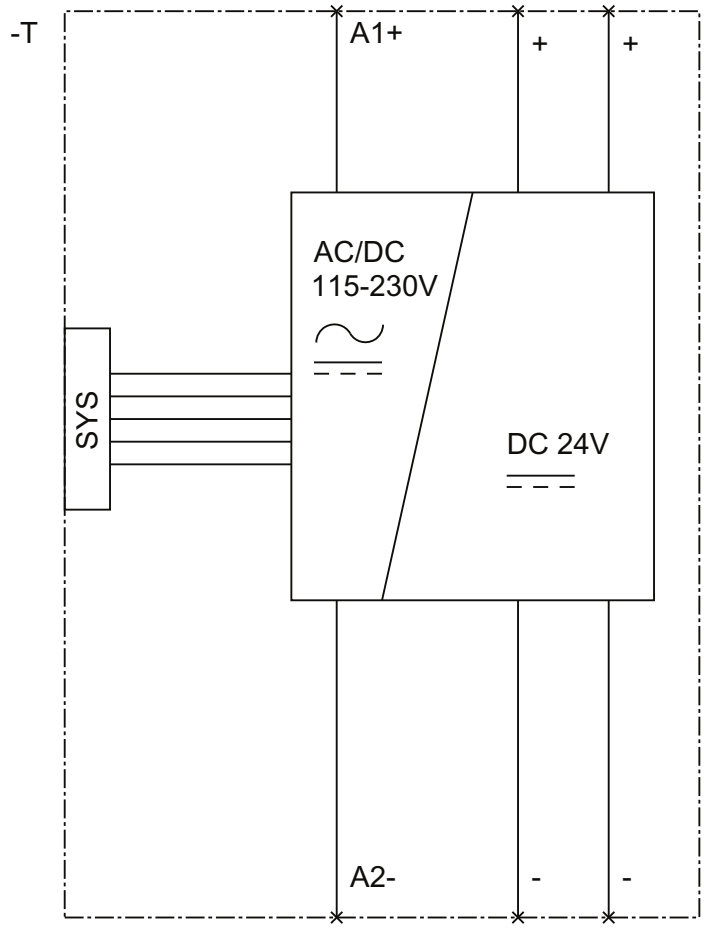

7.2 Typical circuits

7.2.1 Sensor wiring

Parameter definitions depending on the sensor wiring

Slide switch		Description	Typical circuit
AUTO	MONITORED		Basic unit 3SK1 Standard relay
	X	EMERGENCY STOP, single-channel, with monitored start	1 and 2
X		EMERGENCY STOP, single-channel, with autostart	3 and 4
	X	Two-channel, with cross-circuit detection, with monitored start	5
X		Two-channel, with cross-circuit detection, with autostart	6
X		Sensors with solid-state outputs, without cross-circuit detection, with autostart	7

DIP switch				Description	Typical circuit
1	2	3	4		Basic units 3SK1 Standard / Advanced
right	right	right	—	1 x two-channel, with cross-circuit detection, with monitored start	8
left	right	right	—	1 x two-channel, with cross-circuit detection with autostart	9
right	left	right	—	Electronic sensor, without cross-circuit detection, with monitored start	10
left	left	right	—	Electronic sensor, without cross-circuit detection, with autostart	11
right	left	left	—	2 x single-channel, without cross-circuit detection, with monitored start	12
left	left	left	—	2x single-channel, without cross-circuit detection, with autostart	13

— = Not relevant

DIP switch				Description	Typical circuit
1	2	3	4		Basic units 3SK1 Advanced
right	right	right	—	1NC/1NO sensor, with cross-circuit detection, with monitored start	14
left	right	right	—	1NC/1NO sensor, with cross-circuit detection, with autostart	15
left	right	right	—	Two-hand operation, with cross-circuit detection, with autostart	16

— = Not relevant

7.2.2 Typical circuits

The black fields show the positions of the switches. Here, "Autostart" in each case.

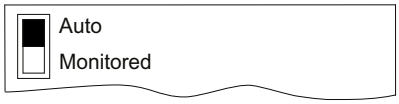

Typical circuits for basic unit 3SK1111 Standard relay

Table 7- 1 Typical circuit 1:
Single-channel, with monitored start

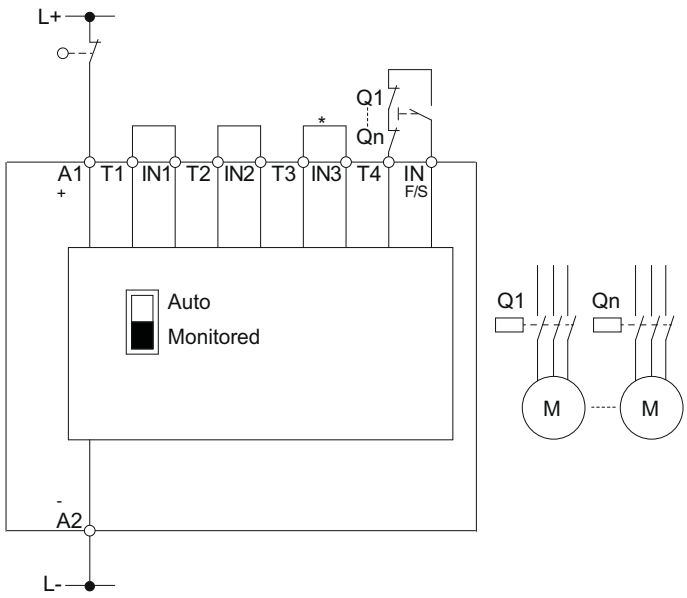

* For 3SK1111-.AB30 basic unit only

- Monitored start
- 3SK1111 Standard relay
- Sensor: 1 NC contact

Slide switch	
Auto	**Monitored**
—	ON bottom

Up to PL in accordance with ISO 13849-1	c
Up to Safety Integrity Level (SILCL) to IEC 62061	1

Table 7- 2 Typical circuit 2:
Single-channel, with monitored start

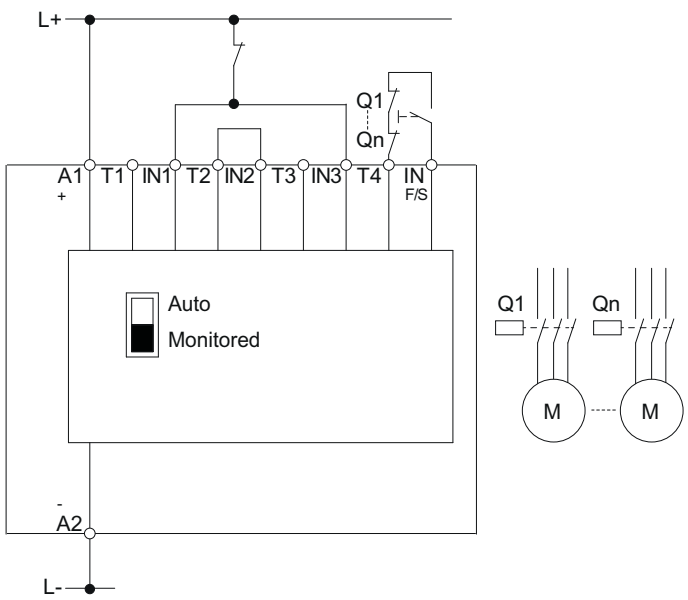

- Monitored start
- 3SK1111 Standard relay
- Sensor: 1 NC contact

Slide switch	
Auto	**Monitored**
—	ON bottom

Up to PL in accordance with ISO 13849-1	c
Up to Safety Integrity Level (SILCL) to IEC 62061	1

Table 7- 3 Typical circuit 3:
single-channel, with autostart

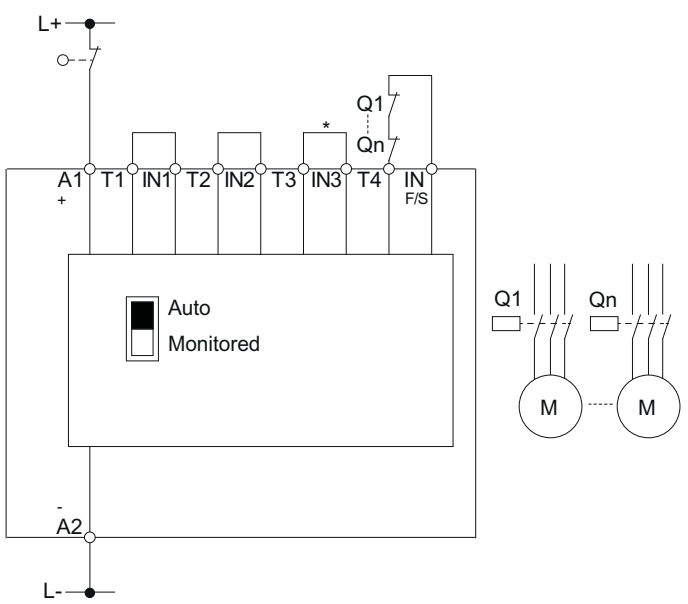

* For 3SK1111-.AB30 basic unit only

- Autostart
- 3SK1111 Standard relay
- Sensor: 1 NC contact

Slide switch	
Auto	**Monitored**
ON top	—

Up to PL in accordance with ISO 13849-1	c
Up to Safety Integrity Level (SILCL) to IEC 62061	1

Table 7- 4 Typical circuit 4:
single-channel, with autostart

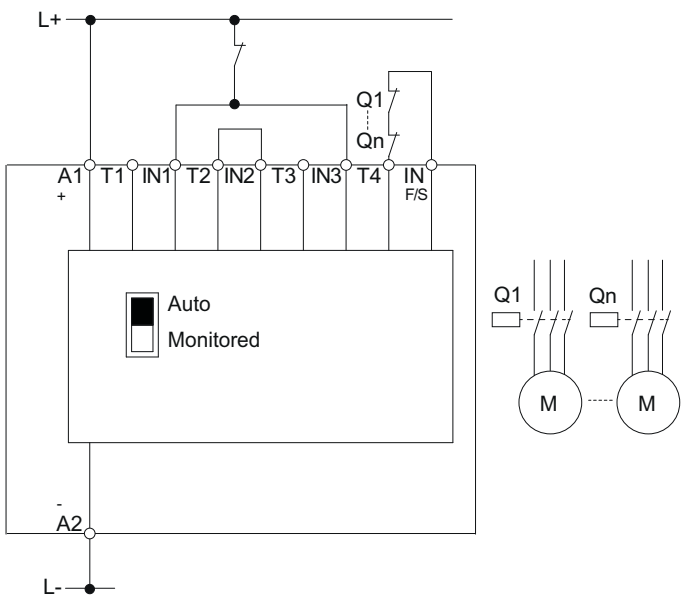

• Autostart • 3SK1111 Standard relay • Sensor: 1 NC contact		
Slide switch		
Auto	**Monitored**	
ON top	—	
Up to PL in accordance with ISO 13849-1		c
Up to Safety Integrity Level (SILCL) to IEC 62061		1

Table 7- 5 Typical circuit 5:
EMERGENCY STOP two-channel, with cross-circuit detection, with monitored start

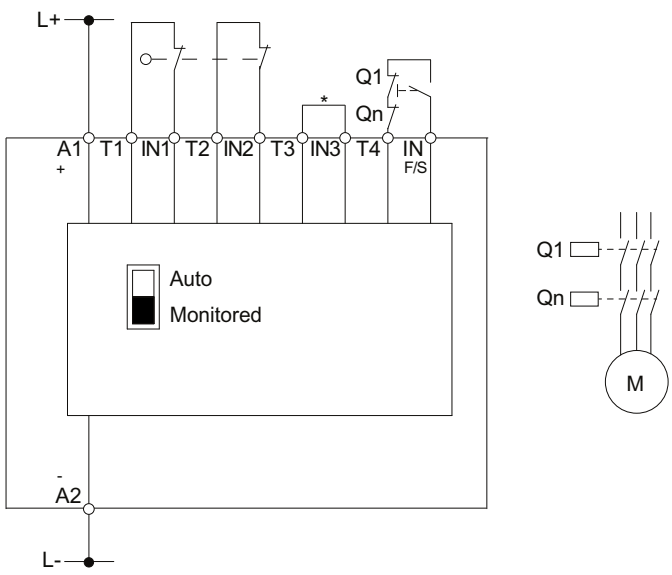

* For 3SK1111-.AB30 basic unit only

• Monitored start • With cross-circuit detection • Sensor: 2 NC contacts • 3SK1111 Standard relay		
Slide switch		
Auto	**Monitored**	
—	ON bottom	
Up to PL in accordance with ISO 13849-1		e
Up to Safety Integrity Level (SILCL) to IEC 62061		3

Table 7- 6 Typical circuit 6:
Two-channel, with cross-circuit detection, with autostart

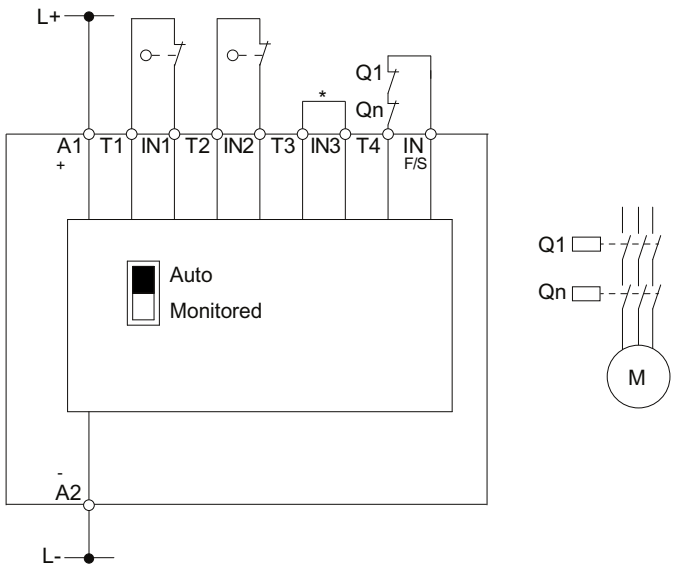

* For 3SK1111-.AB30 basic unit only

- Autostart
- With cross-circuit detection
- Sensor: 2 NC contacts
- 3SK1111 Standard relay

Slide switch	
Auto	**Monitored**
ON top	—

Up to PL in accordance with ISO 13849-1	e
Up to Safety Integrity Level (SILCL) to IEC 62061	3

Table 7- 7 Typical circuit 7:
Sensors with solid-state outputs, without cross-circuit detection, with autostart

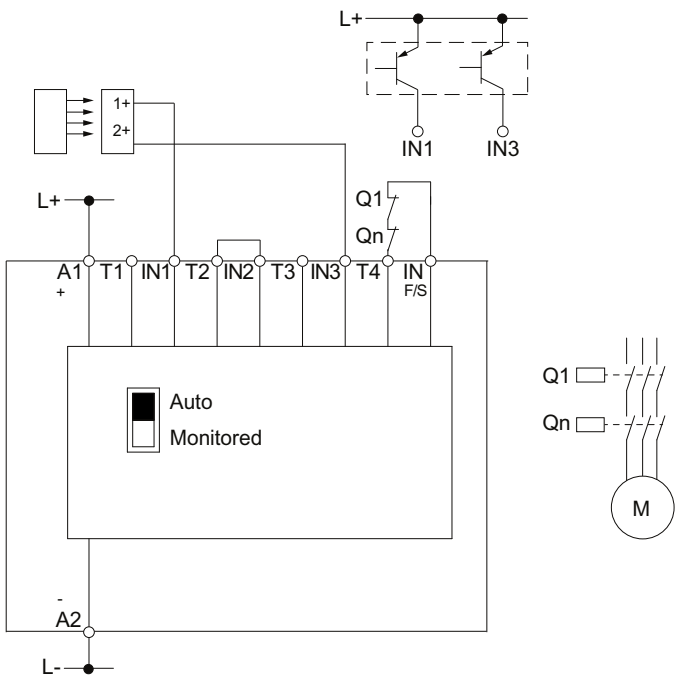

- Autostart
- Without cross-circuit detection
- Sensor: 2-channel non-floating
- 3SK1111 Standard relay

Slide switch		
Auto	**Monitored**	
ON top	—	
Up to PL in accordance with ISO 13849-1		e
Up to Safety Integrity Level (SILCL) to IEC 62061		3

Typical circuits for 3SK1 Standard solid-state basic units or 3SK1 Advancedbasic units

Table 7- 8 Typical circuit 8: EMERGENCY STOP two-channel, with cross-circuit detection, with monitored start

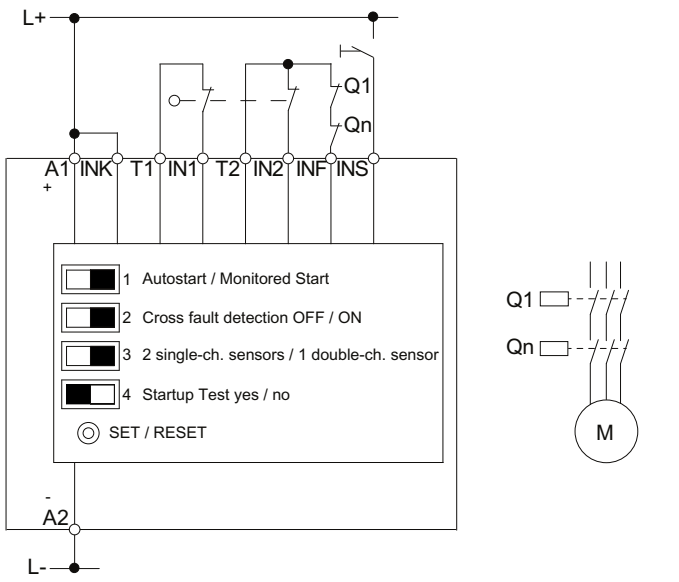

- Monitored start
- With cross-circuit detection
- 1 x two-channel
- Sensor: 2 NC contacts
- 3SK1112 Standard solid-state and 3SK112 / 3SK122 Advanced

DIP switch			
1	**2**	**3**	**4**
ON right	ON right	ON right	—
Up to PL in accordance with ISO 13849-1			e
Up to Safety Integrity Level (SILCL) to IEC 62061			3

Table 7- 9 Typical circuit 9: Two-channel, with cross-circuit detection, with autostart

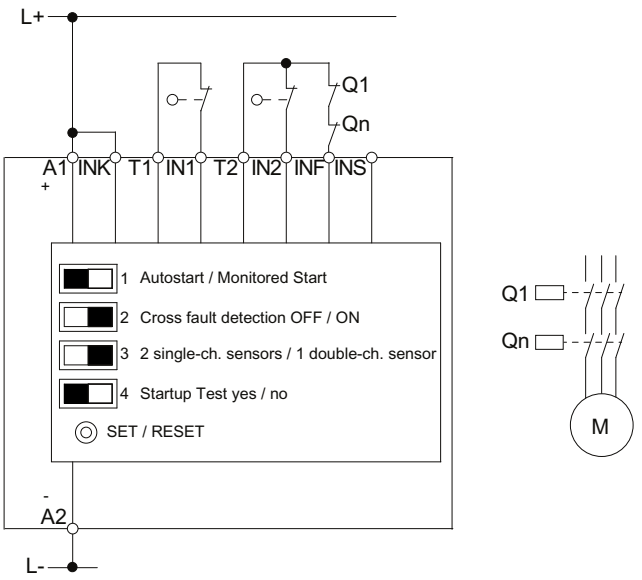

- Autostart
- With cross-circuit detection
- 1 x two-channel
- Sensor: 2 NC contacts
- 3SK1112 Standard solid-state and 3SK112 / 3SK122 Advanced

DIP switch			
1	**2**	**3**	**4**
OFF left	ON right	ON right	—
Up to PL in accordance with ISO 13849-1			e
Up to Safety Integrity Level (SILCL) to IEC 62061			3

Table 7- 10 Typical circuit 10:
Electronic sensor, 2-channel, without cross-circuit detection, with monitored start

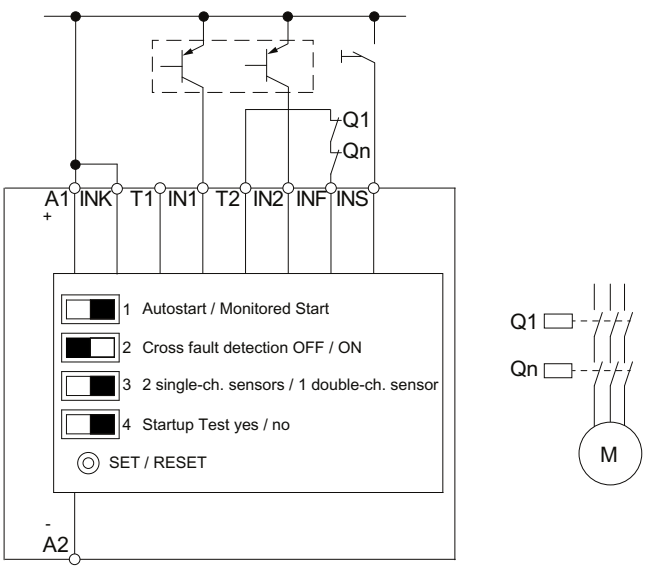

- Monitored start
- Without cross-circuit detection
- 1 x two-channel
- Sensor: 2-channel non-floating
- 3SK1112 Standard solid-state and 3SK112 Advanced

DIP switch			
1	**2**	**3**	**4**
ON right	OFF left	ON right	—
Up to PL in accordance with ISO 13849-1			e
Up to Safety Integrity Level (SILCL) to IEC 62061			3

Table 7- 11 Typical circuit 11:
Electronic sensor, two-channel, without cross-circuit detection, with autostart

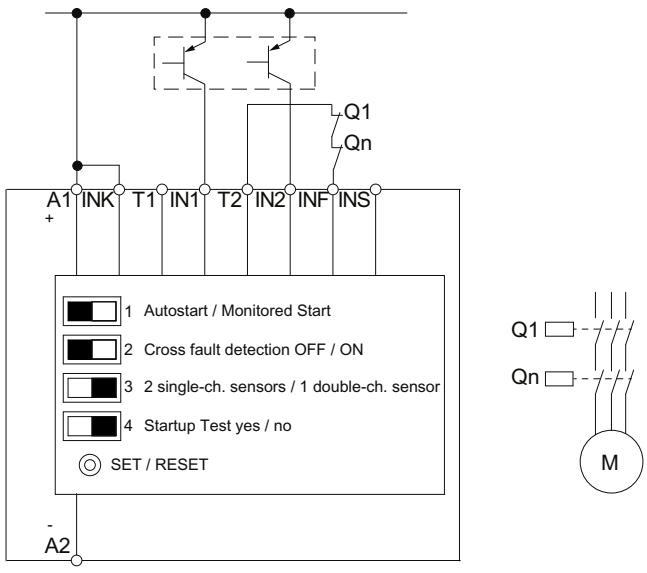

- Autostart
- Without cross-circuit detection
- 1 x two-channel
- Sensor: 2-channel non-floating
- 3SK1112 Standard solid-state and 3SK112 Advanced

DIP switch			
1	**2**	**3**	**4**
OFF left	OFF left	ON right	—
Up to PL in accordance with ISO 13849-1			e
Up to Safety Integrity Level (SILCL) to IEC 62061			3

Note

Single-channel connection

If only one single-channel sensor is used, the other sensor circuit must be jumpered.

Table 7- 12 Typical circuit 12: 2 x single-channel, without cross-circuit detection, with monitored start

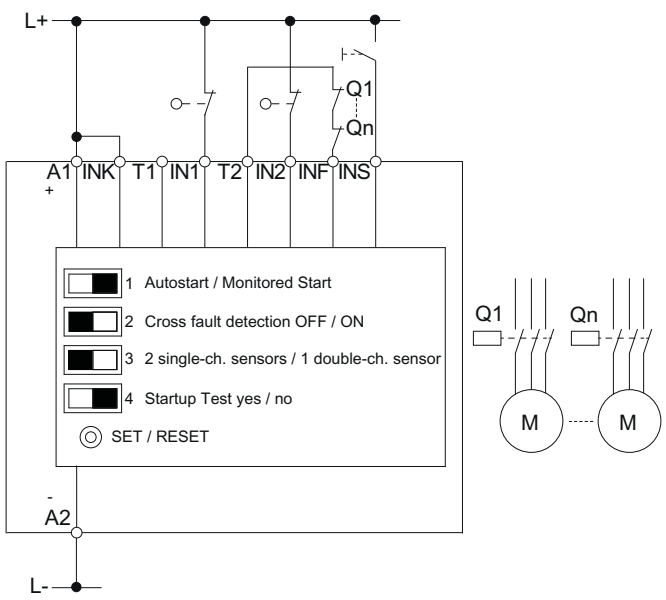

- Monitored start
- Without cross-circuit detection
- 2 x single-channel
- Sensor: two single-channel NC sensors
- 3SK1112 Standard solid-state and 3SK112 Advanced

DIP switch

1	2	3	4
ON right	OFF left	OFF left	—

Up to PL in accordance with ISO 13849-1	c
Up to Safety Integrity Level (SILCL) to IEC 62061	1

Table 7- 13 Typical circuit 13: 2x single-channel, without cross-circuit detection, with autostart

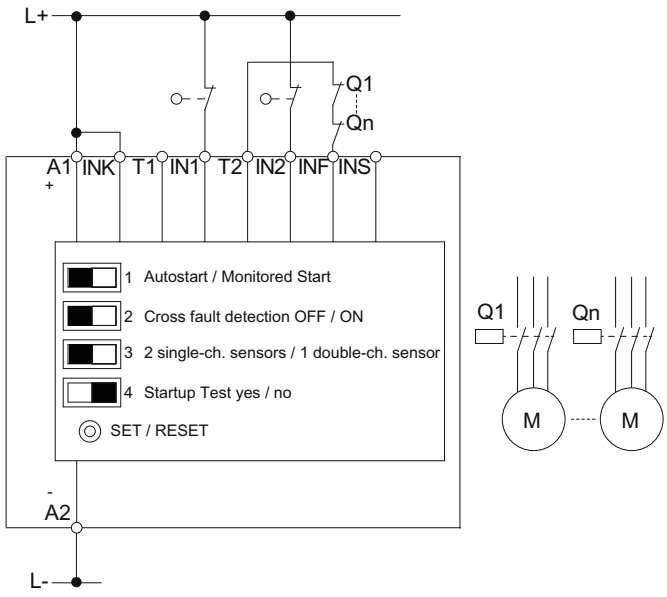

- Autostart
- Without cross-circuit detection
- 2 x single-channel
- Sensor: two single-channel NC contacts
- 3SK1112 Standard solid-state and 3SK112 Advanced

DIP switch

1	2	3	4
OFF left	OFF left	OFF left	—

Up to PL in accordance with ISO 13849-1	c
Up to Safety Integrity Level (SILCL) to IEC 62061	1

Typical circuits for 3SK1 Advanced basic units only

Table 7- 14 Typical circuit 14:
1NC/1NO sensor, with cross-circuit detection, with monitored start

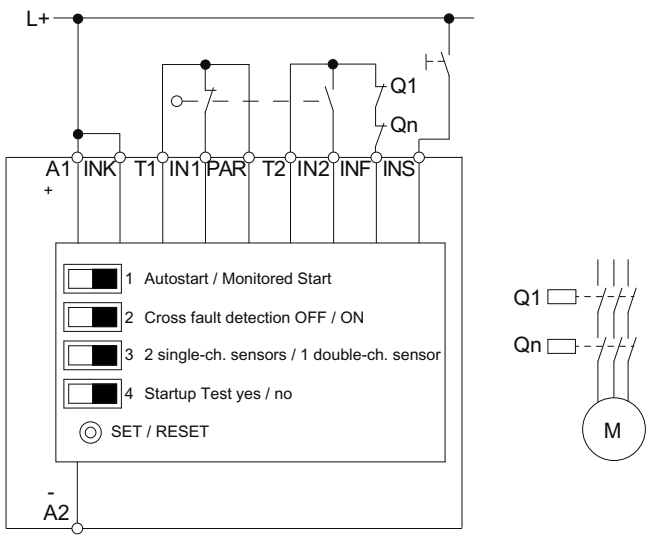

- Monitored start
- With cross-circuit detection
- 1 x two-channel
- Jumper T1/PAR for NC/NO evaluation
- Sensor: NC/NO sensor
- 3SK112 Advanced

DIP switch			
1	**2**	**3**	**4**
ON right	ON right	ON right	—
Up to PL in accordance with ISO 13849-1			e
Up to Safety Integrity Level (SILCL) to IEC 61508			3

Table 7- 15 Typical circuit 15:
1NC/1NO sensor, with cross-circuit detection, with autostart

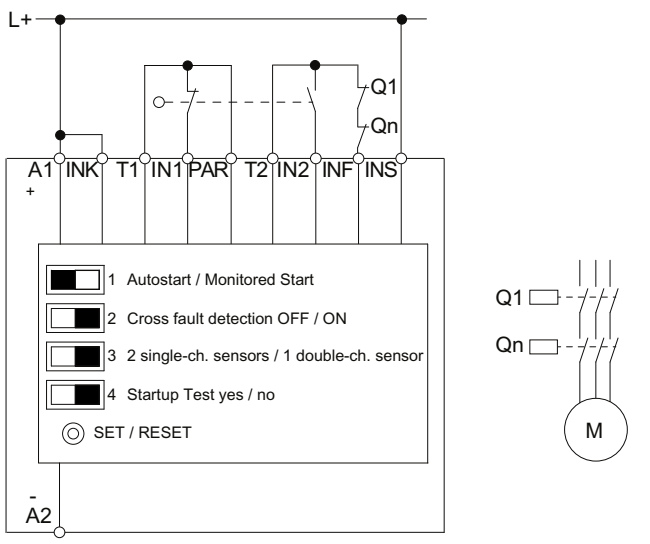

- Autostart
- With cross-circuit detection
- 1 x two-channel
- Jumper T1/PAR for NC/NO evaluation
- Sensor: NC/NO sensor
- 3SK112 Advanced

DIP switch			
1	**2**	**3**	**4**
OFF left	ON right	ON right	—
PL in accordance with ISO 13849-1			e
Safety Integrity Level (SILCL) to IEC 61508			3

Table 7- 16 Typical circuit 16:
Two-hand operation, with cross-circuit detection, with autostart

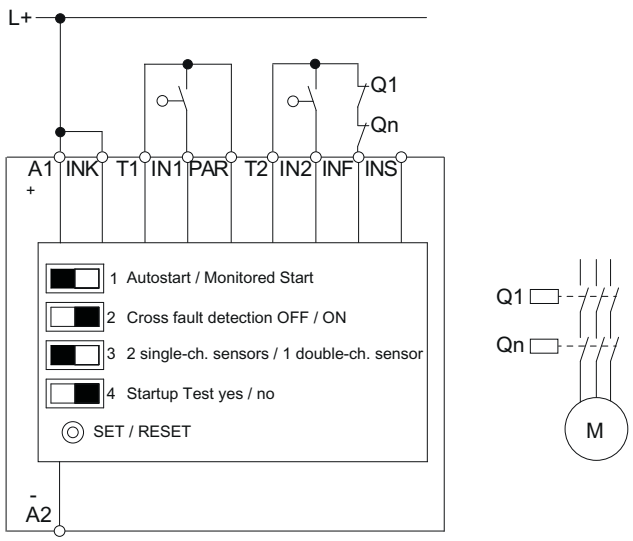

- Autostart
- With cross-circuit detection
- 2 x single-channel
- Jumper T1/PAR for NC/NO evaluation
- Sensor: Two-hand NO/NO sensor
- 3SK112 Advanced

DIP switch			
1	**2**	**3**	**4**
OFF left	ON right	OFF left	—
PL in accordance with ISO 13849-1			e
Safety Integrity Level (SILCL) to IEC 61508			3

For more information on two-hand operation, please refer to the chapter Two-hand operation/synchronism (Page 36).

Mounting 8

8.1 Warning notices

Warning notices before installation, wiring, and commissioning

⚠ WARNING
Hazardous voltage! Can cause electric shock and burns. Turn off and lock out all power supplying this device before working on this device.

8.2 Terminal coding

You can provide the terminals with coding pins (3ZY1440-1AA00). This helps you to avoid errors when replacing the terminals.

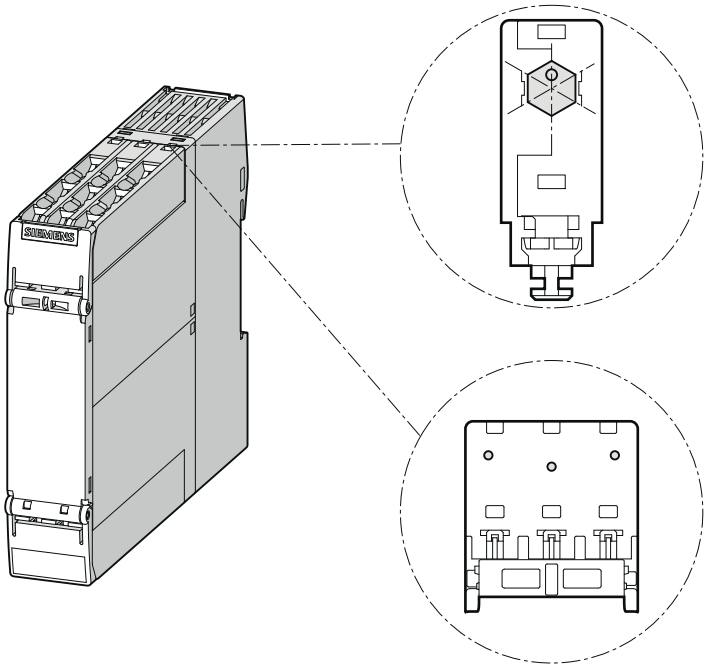

Figure 8-1 Module with coding pins

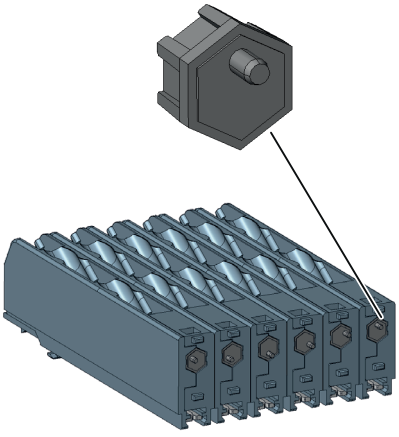

Figure 8-2 Stud position rotated by 60° in each case

8.3 Mounting the devices on a level surface

Requirements

Please note the following requirements for mounting on a level surface:

- Please observe the information about the mounting position in the chapter "General technical data (Page 193)".
- Two properly executed drill holes with thread or plug on the level surface.

  For details of the distances between the drilled holes, please refer to the relevant dimension drawings in the chapter "Dimension drawings for 3SK1 devices (Page 243)".
- Two screws (17.5 mm or 22.5 mm devices)/or four screws (90 mm devices) to fit the holes M4 x 12 in accordance with DIN 784.
- Two plastic securing brackets.

  Please refer to the accessories list for the relevant order number in the chapter "Accessories (Page 257)".

Procedure

Step	Instructions	Figure
1	Insert the securing brackets into the openings provided on the device until they engage.	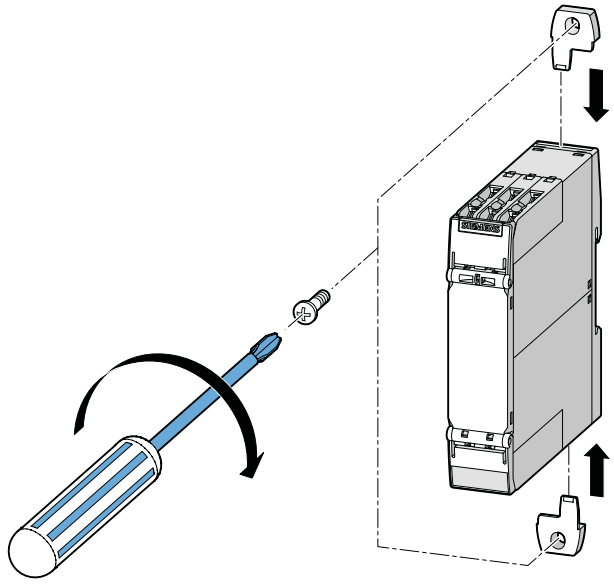 17.5 mm and 22.5 mm devices 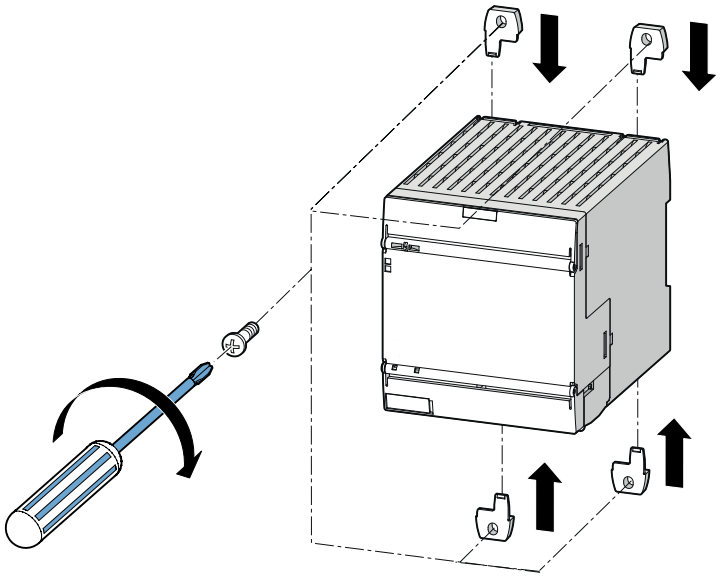 90 mm device
2	Hold the device up to the surface prepared for screw fastening.	
3	Insert the screws through the oblong holes in the securing brackets.	
4	Screw the device onto the level surface so that it is secure. Tightening torque: 1 Nm	

8.4 Disassembling devices from a level surface

⚠ WARNING
Hazardous Voltage **Can Cause Death, Serious Injury, or Property Damage.** Before starting work, therefore, disconnect the system and devices from the power supply.

Requirements

- The terminals have been removed or disconnected.

Procedure

Step	Instructions	Figure
1	Hold the device firmly.	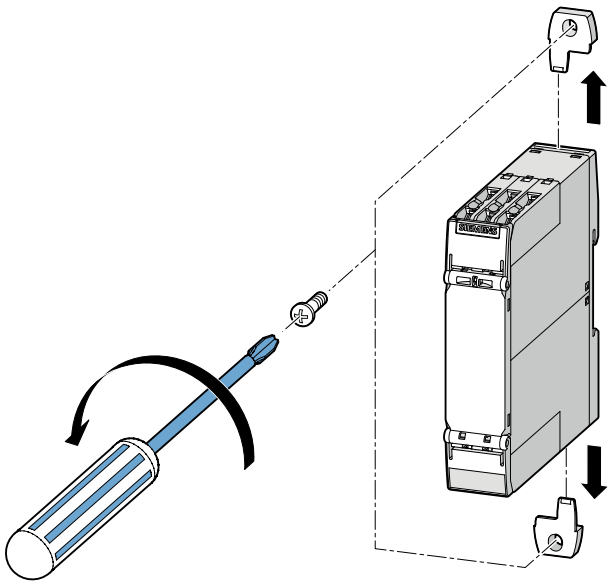 Disassembling 17.5 mm and 22.5 mm devices
2	Unscrew the cap screws.	
3	Lift the device from the level surface.	
4	Remove the securing brackets from the device.	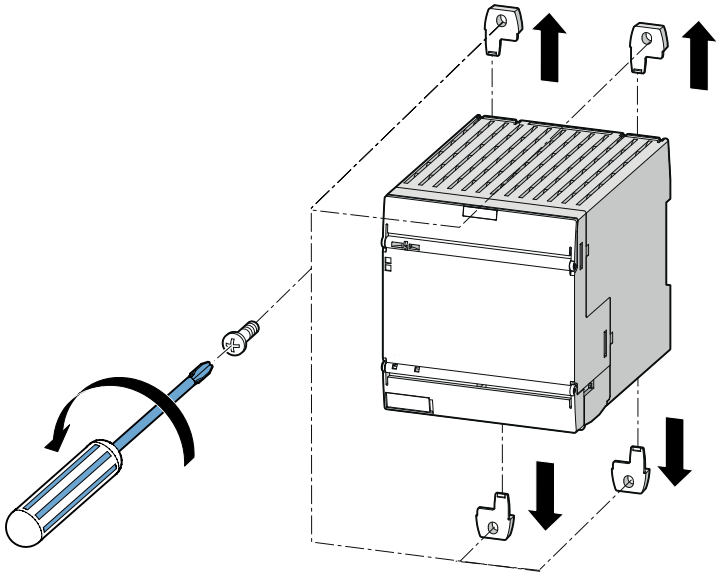 Disassembling 90 mm devices

8.5 Mounting the 22.5 mm/17.5 mm device on a standard mounting rail

Requirements

- A horizontal 35-mm wide mounting rail in accordance with DIN EN 60715 has been properly secured at the installation location.
- Please observe the information about the mounting position in the chapter "General technical data (Page 193)".

Procedure

The figures show 22.5 mm devices. The 17.5 mm devices are mounted correspondingly.

Step	Instructions	Figure
1	Hang the back of the device onto the upper edge of the standard mounting rail	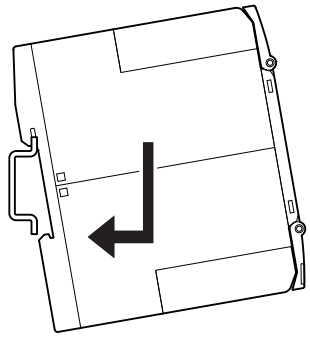
2	Press the lower half of the device against the rail until the device engages	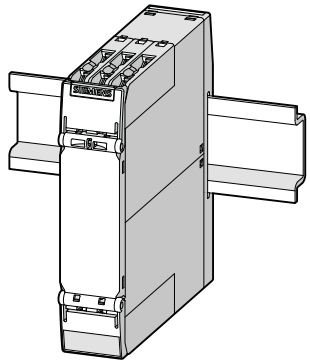

8.6 Mounting the 90 mm devices on a standard mounting rail

Requirements

- A horizontal 35-mm wide mounting rail in accordance with DIN EN 60715 has been properly secured at the installation location.
- Please observe the information about the mounting position in the chapter "General technical data (Page 193)".

Procedure

Step	Instructions	Figure
1	Hang the back of the device onto the upper edge of the standard mounting rail	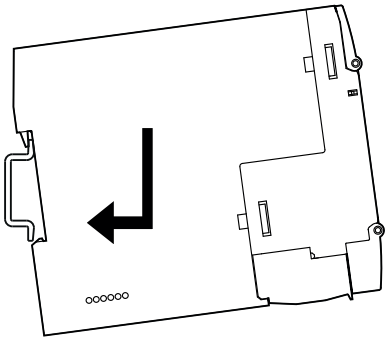
2	Press the lower half of the device against the rail until the device engages	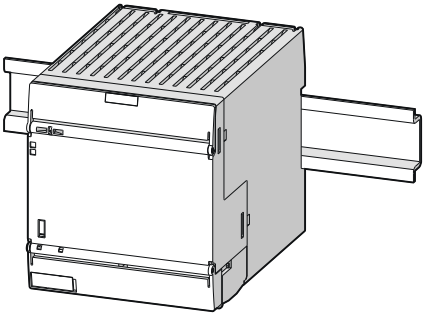

8.7 Removing devices from a standard mounting rail

⚠ WARNING
Hazardous Voltage **Can Cause Death, Serious Injury, or Property Damage.** Before starting work, therefore, disconnect the system and devices from the power supply.

Requirements

- The terminals have been removed or disconnected.

Procedure

Step	Instructions	Figure
1	Press the device downwards.	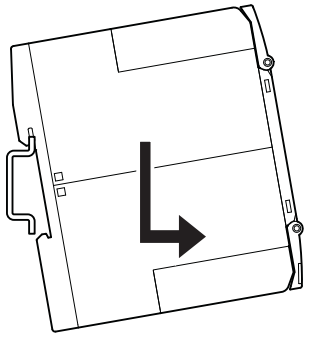
2	Pull the lower half of the device away from the standard mounting rail.	
3	Lift the device from the upper edge of the standard mounting rail.	

8.8 Mounting 22.5 mm/17.5 mm devices with device connectors on a standard mounting rail

Requirements

- A horizontal 35-mm wide mounting rail in accordance with DIN EN 60715 has been properly secured at the installation location.
- Please observe the information about the mounting position in the chapter "General technical data (Page 193)".

Procedure

The figures show 22.5 mm devices. The 17.5 mm devices are mounted correspondingly.

Step	Instructions	Figure
1	Place the back of the device connector on the upper edge of the standard mounting rail.	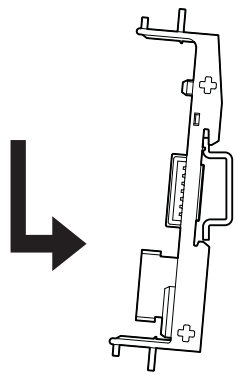
2	Press the lower half of the device connector against the standard mounting rail until the connector engages.	
3	Repeat the procedure with all the required device connectors.	

Step	Instructions	Figure
4	Push the device connectors together until they engage.	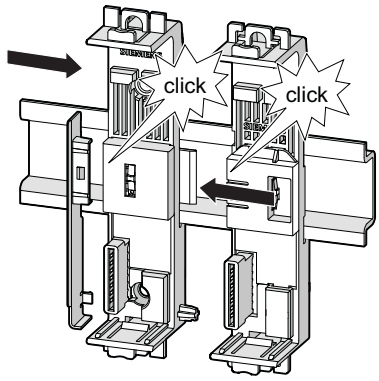
5	Mount the cover on the left of the first device connector. The cover is included in the scope of supply of the device terminator.	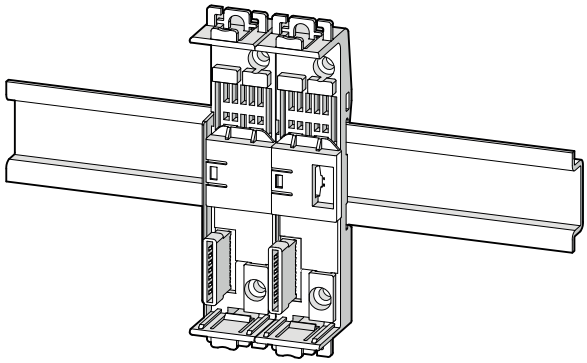
6	Set the slide switches in the device termination connector (Type 1) to the following positions • Below 3SK1 basic unit: position 2 (bottom; i.e. open) • Below output expansion 3SK1211 position 1 (top; i.e. closed)	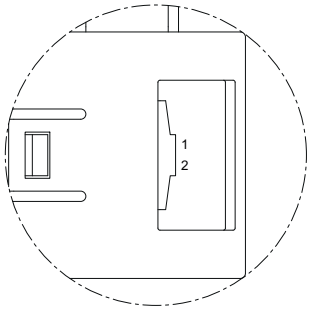

Step	Instructions	Figure
7	Mount the device on the device connector	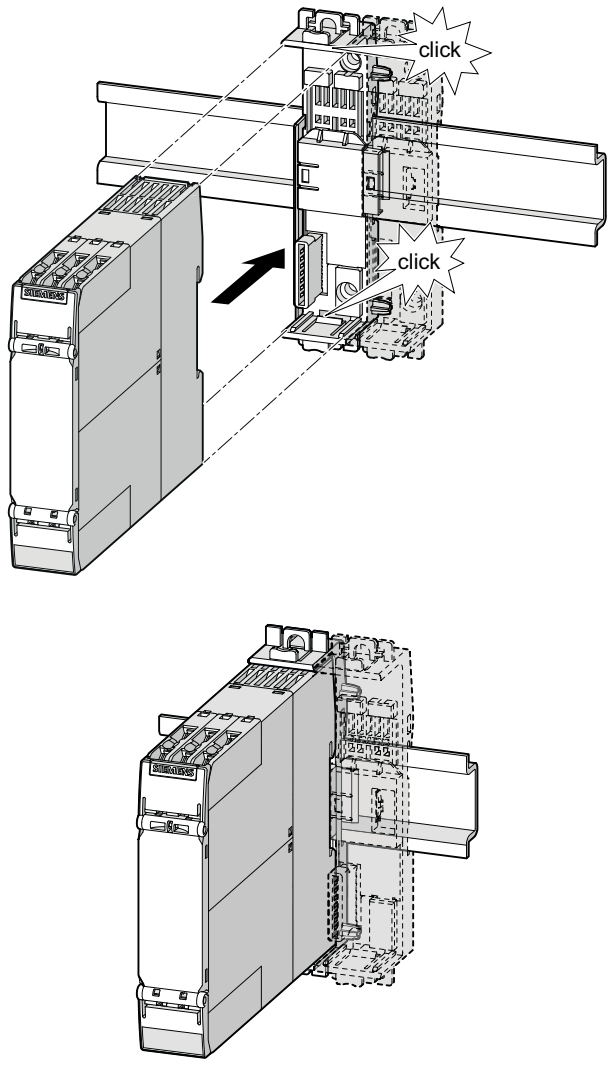
8	Mount all the devices required for the system configuration in accordance with the respective installation guidelines on the device connectors	

8.9 Removing 22.5 mm/17.5 mm devices with device connectors from a standard mounting rail

⚠ WARNING
Hazardous Voltage **Can Cause Death, Serious Injury, or Property Damage.** Before starting work, therefore, disconnect the system and devices from the power supply.

Requirements

- The terminals have been removed or disconnected.

Procedure

The figures show 22.5 mm devices. The 17.5 mm devices are removed correspondingly.

Step	Instructions	Figure
1	Unlock the device using a screwdriver.	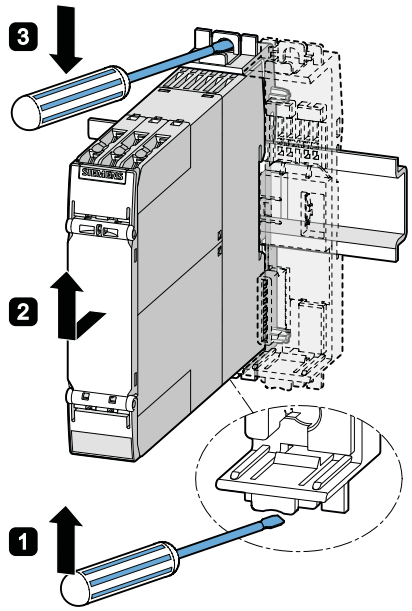
2	Pull the lower half of the device away from the device connector.	
3	Unlock the device using a screwdriver.	
4	Pull the device away from the device connector.	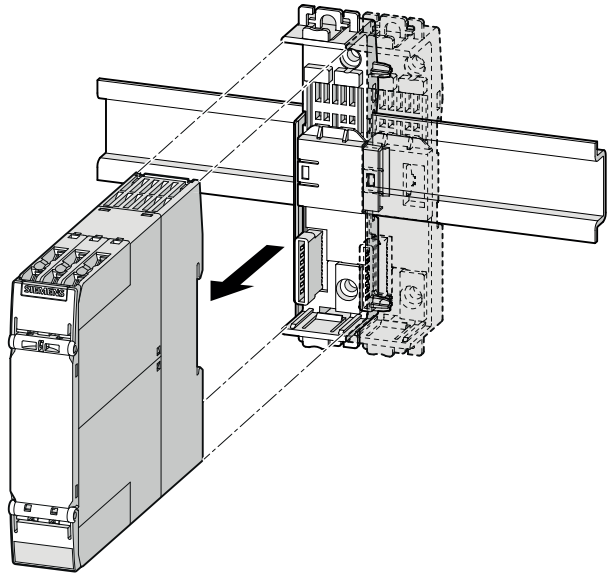

Step	Instructions	Figure
5	Separate the device connectors using a screwdriver	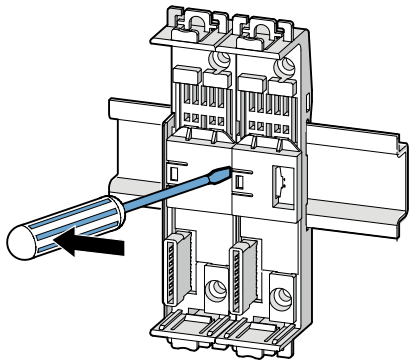
6	Remove the cover	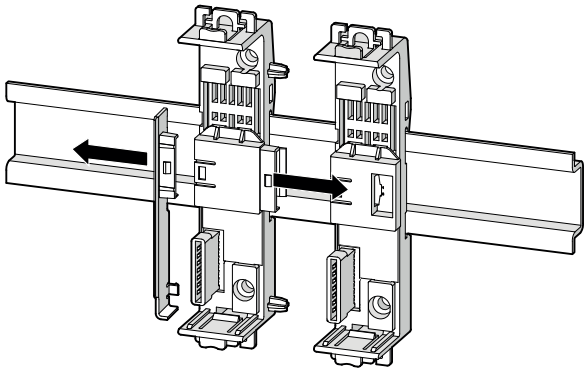

Step	Instructions	Figure
7	Press the device connector downwards	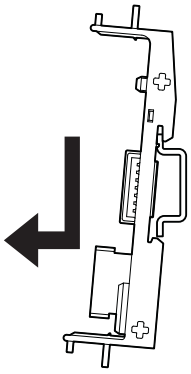
8	Pull the lower half of the device connector away from the standard mounting rail	
9	Lift the device connector from the upper edge of the standard mounting rail	

8.10 Mounting 90 mm devices with device connectors on a standard mounting rail

Requirements

- A horizontal 35-mm wide mounting rail in accordance with DIN EN 60715 has been properly secured at the installation location.
- Please observe the information about the mounting position in the chapter "General technical data (Page 193)".
- Use device connectors type 2 for enclosures > 45 mm.
- Please observe the obligatory mounting rules in Section: "System configuration rules (Page 100)".

Procedure

Step	Instructions	Figure
1	Hang the back of the device connector onto the upper edge of the standard mounting rail	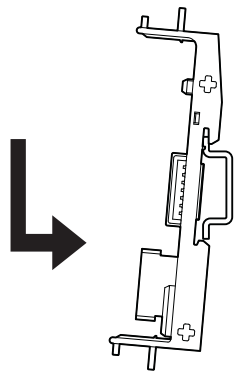
2	Press the lower half of the device connector against the standard mounting rail until the connector engages	
3	Repeat the process with all the device connectors required	

Step	Instructions	Figure
4	Push the device connectors together until they engage.	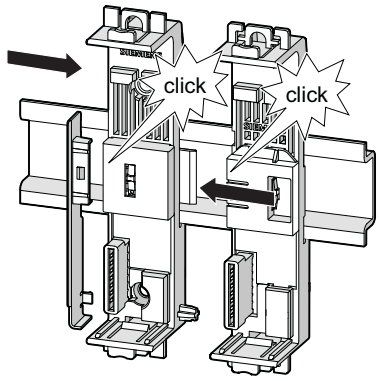
5	Mount the cover on the left of the first device connector piece and the device connectors supplied in the set for enclosures of 45 mm upwards (right-hand side)	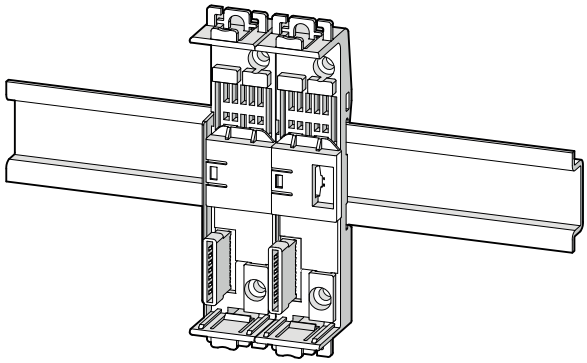
6	Note the clearances required for the 90 mm devices	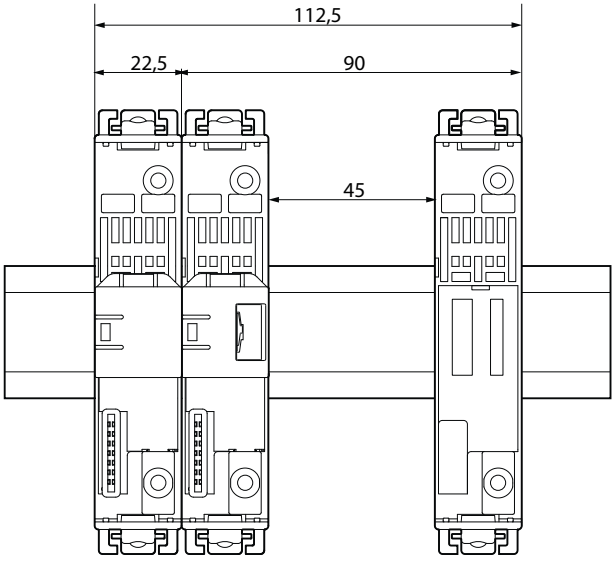

Step	Instructions	Figure
7	Mount output expansion 3SK1213 on the device connectors	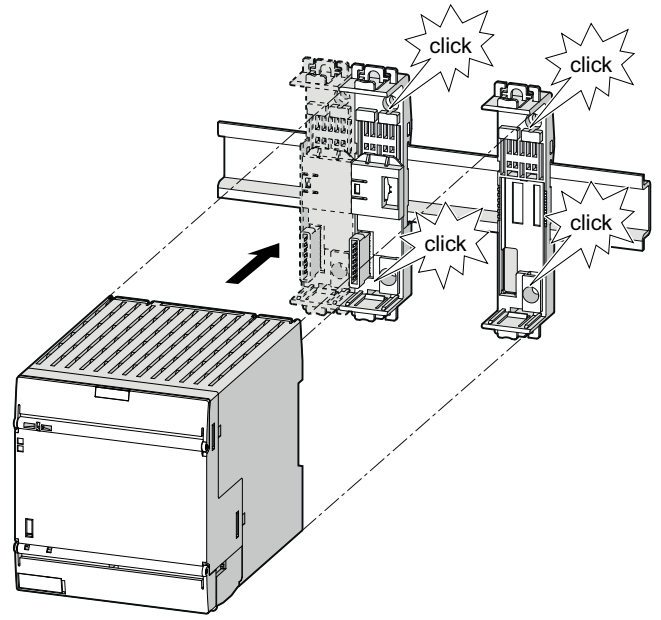
8	Mount all the devices required for the system configuration in accordance with the respective installation guidelines on the device connectors	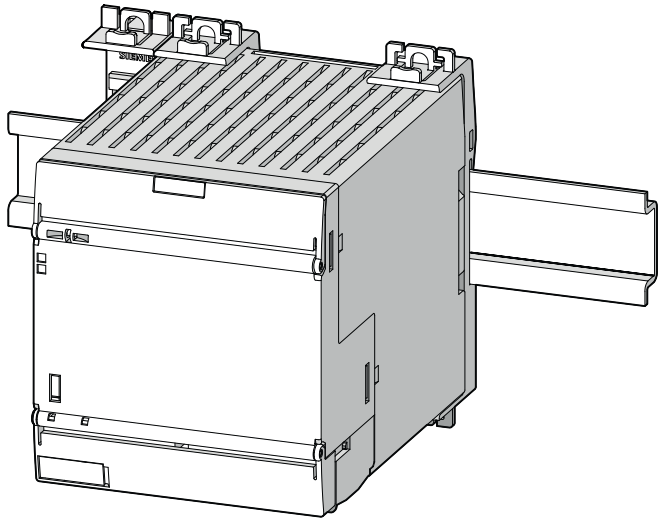

8.11 Removing 90 mm devices with device connectors from a standard mounting rail

⚠ WARNING
Hazardous Voltage **Can Cause Death, Serious Injury, or Property Damage.** Before starting work, therefore, disconnect the system and devices from the power supply.

Requirements

- The terminals have been removed or disconnected.

Procedure

Step	Instructions	Figure
1	Unlock the device using a screwdriver	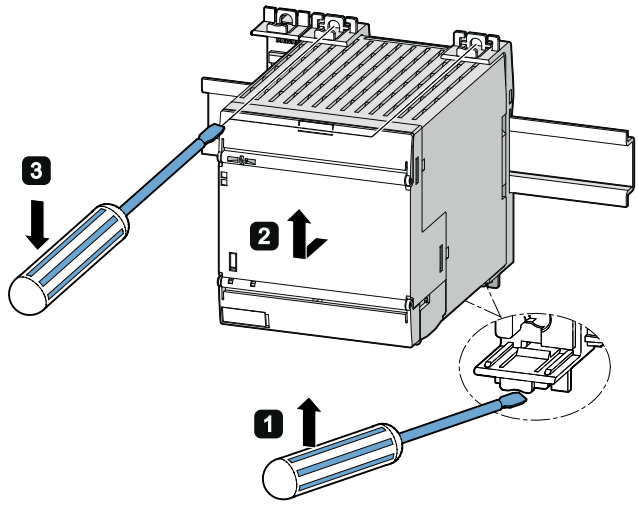
2	Pull the lower half of the device away from the device connector.	
3	Unlock the device using a screwdriver	
4	Pull the device away from the device connector	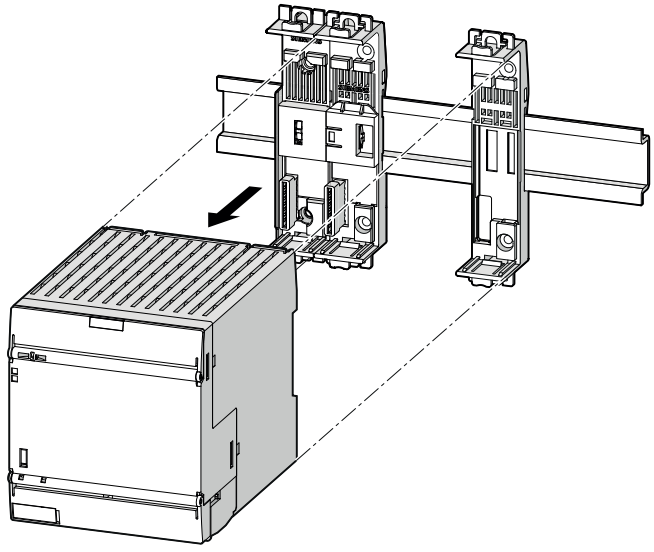

Step	Instructions	Figure
5	Separate the device connectors using a screwdriver	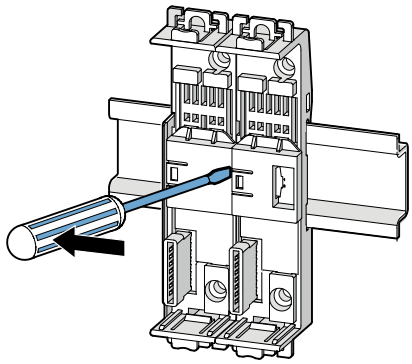
6	Remove the termination piece.	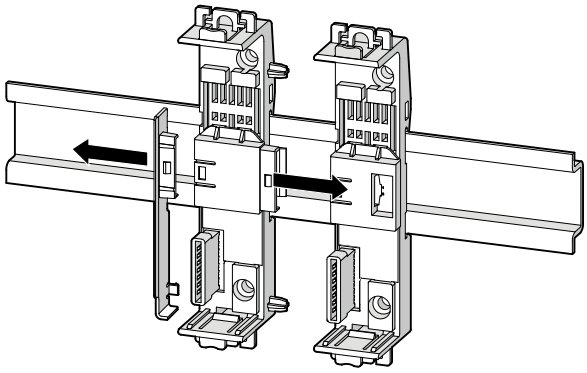

Step	Instructions	Figure
7	Press the device connector downwards	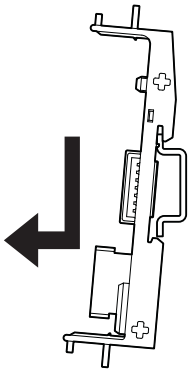
8	Pull the lower half of the device connector away from the standard mounting rail	
9	Lift the device connector from the upper edge of the standard mounting rail	

8.12 Mounting 22.5 mm/17.5 mm devices with device connectors on the wall

Requirements

Please note the following requirements for mounting on a level surface:

- Please observe the information about the mounting position in the chapter "General technical data (Page 193)".
- Two properly executed drill holes (per device connector) with thread or plug on the level surface.

  For details of the distances between the drilled holes, please refer to the relevant dimension drawings in the chapter "Dimension drawings 3SK1 device connectors (Page 251)".
- Two screws (per device connector) to fit the holes M4 x12 in accordance with DIN 784.
- Device connector

  Please refer to the accessories list for the relevant order number in the chapter "Accessories (Page 257)".

Procedure for mounting on a level surface

The figures show 22.5 mm devices. The 17.5 mm devices are mounted correspondingly.

Step	Instructions	Figure
1	Push the device connectors together until they engage	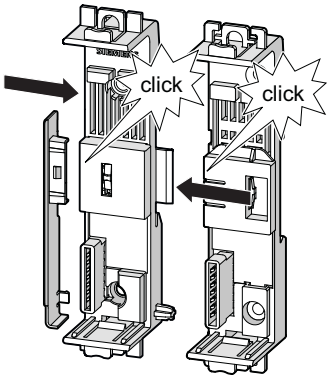
2	Mount the cover on the left of the first device connector. The cover is included in the scope of supply of the device termination connector	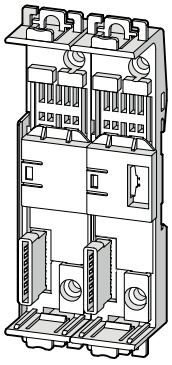
3	Set the slide switches in the device termination connector (Type 1) to the following positions • Below 3SK1 basic unit: position 2 (bottom; i.e. open) • Below output expansion 3SK1211 position 1 (top; i.e. closed)	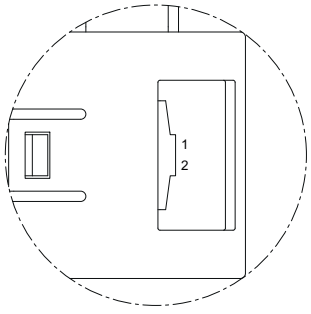

Step	Instructions	Figure
4	Hold the device connector on the level surface prepared for screw fastening.	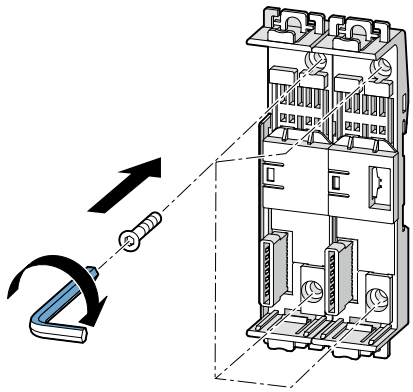
5	Insert each screw through the relevant holes in the device connectors.	
6	Screw the device connector to the level surface so that it is secure. Tightening torques: • Top: < 0.1 Nm • Bottom: 1 Nm	

Step	Instructions	Figure
7	Mount the device on the device connector	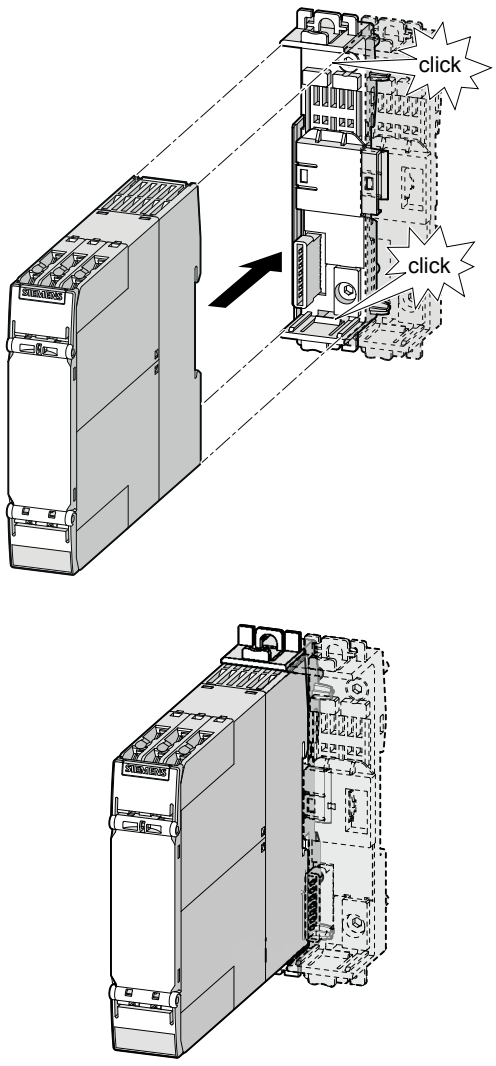
8	Mount all the devices required for the system configuration in accordance with the respective installation guidelines on the device connectors	

8.13 Removing 22.5 mm/17.5 mm devices with device connectors from the wall

⚠ WARNING
Hazardous Voltage **Can Cause Death, Serious Injury, or Property Damage.** Before starting work, therefore, disconnect the system and devices from the power supply.

Requirements

- The terminals have been removed or disconnected.

Procedure

The figures show 22.5 mm devices. The 17.5 mm devices are removed correspondingly.

Step	Instructions	Figure
1	Unlock the device (below) using a screwdriver	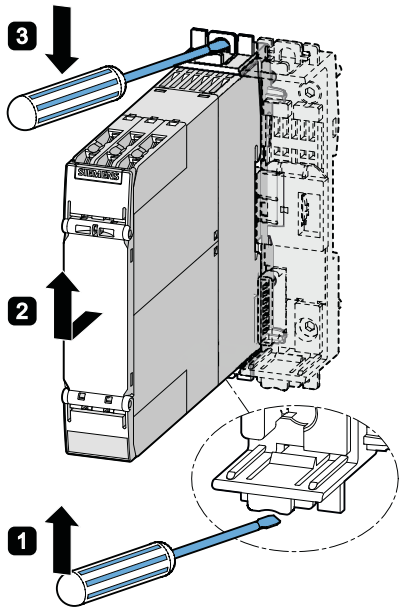
2	Pull the lower half of the device away from the device connector	
3	Unlock the device (above) using a screwdriver	
4	Pull the device away from the device connector	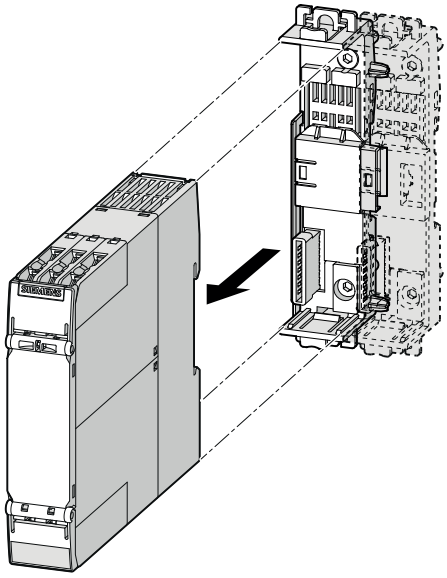

Step	Instructions	Figure
5	Release the screws	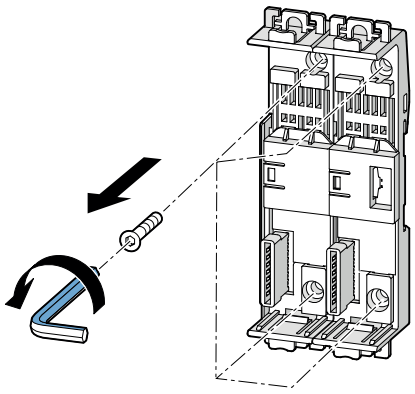
6	Separate the device connectors using a screwdriver	
7	Remove the cover	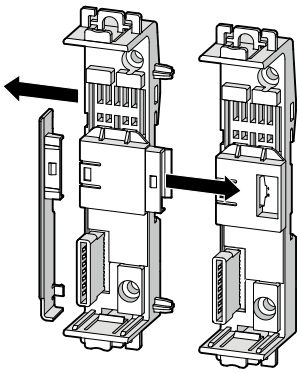

8.14 Mounting 90 mm devices with device connectors on the wall

Requirements

Please note the following requirements for mounting on a level surface:

- Please observe the information about the mounting position in the chapter "General technical data (Page 193)".
- Please note the spacing of the drilled holes in the chapter "Dimension drawings for 3SK1 devices (Page 243)" and "Dimension drawings 3SK1 device connectors (Page 251)".
- Two properly executed drill holes with thread or plug on the level surface (per device connector)
- Two screws (per device connector) to fit the holes M4 x12 in accordance with DIN 784
- Device connector

  Please refer to the accessories list for the relevant order number in the chapter "Accessories (Page 257)".

Procedure

Step	Instructions	Figure
1	Push the device connectors together until they engage	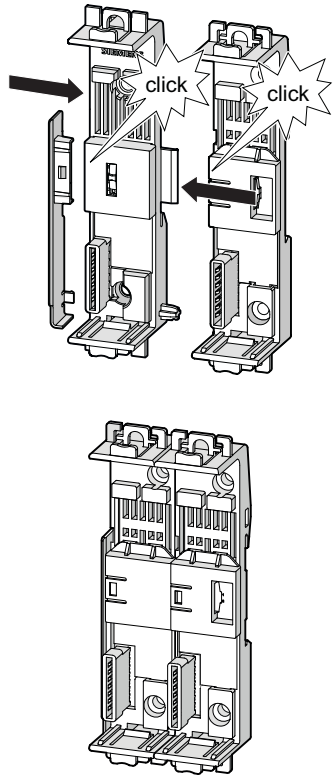
2	Mount the cover on the left of the first device connector	
3	Note the clearances required for the 90 mm devices Mount the device connector supplied in the set for enclosures of 45 mm upwards (right-hand side) Tightening torques: • Top: < 0.1 Nm • Bottom: 1 Nm	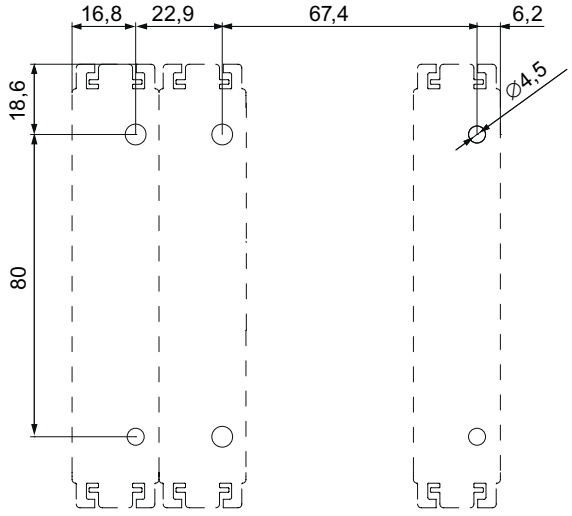

Step	Instructions	Figure
4	Hold the device connector on the level surface prepared for screw fastening.	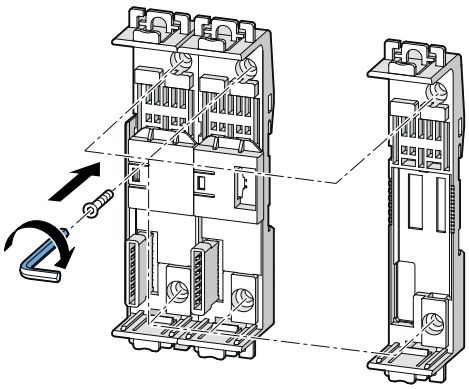
5	Insert each screw through the relevant holes in the device connectors.	
6	Screw the device connector to the level surface so that it is secure.	

Step	Instructions	Figure
7	Mount output expansion 3SK1213 on the device connectors	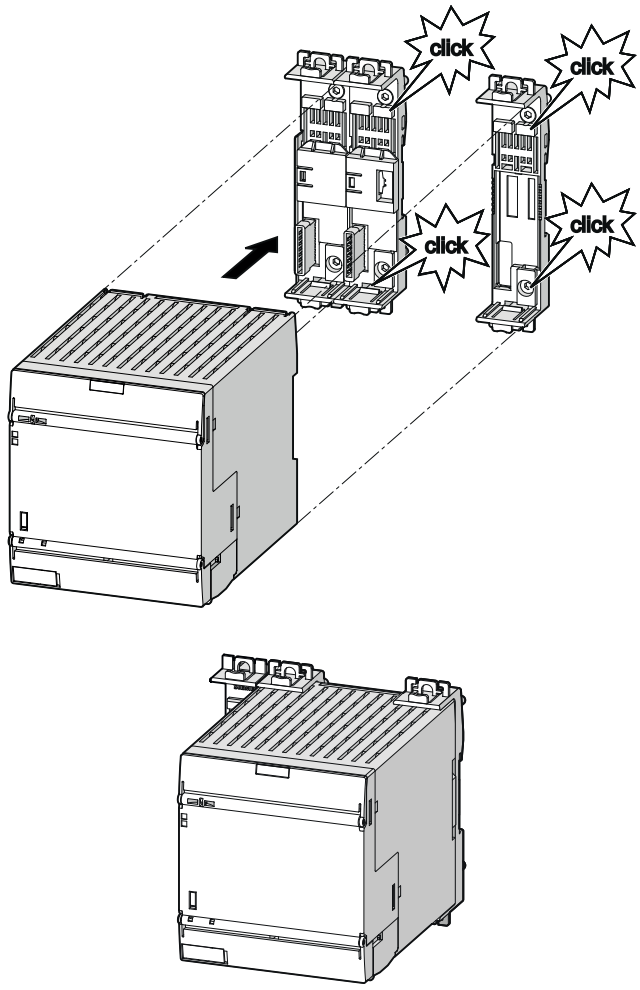
8	Mount all the devices required for the system configuration in accordance with the respective installation guidelines on the device connectors	

8.15 Removing 90 mm devices with device connectors from wall

⚠ WARNING
Hazardous Voltage **Can Cause Death, Serious Injury, or Property Damage.** Before starting work, therefore, disconnect the system and devices from the power supply.

Requirements

- The terminals have been removed or disconnected.

Procedure

Step	Instructions	Figure
1	Unlock the device (bottom) using a screwdriver	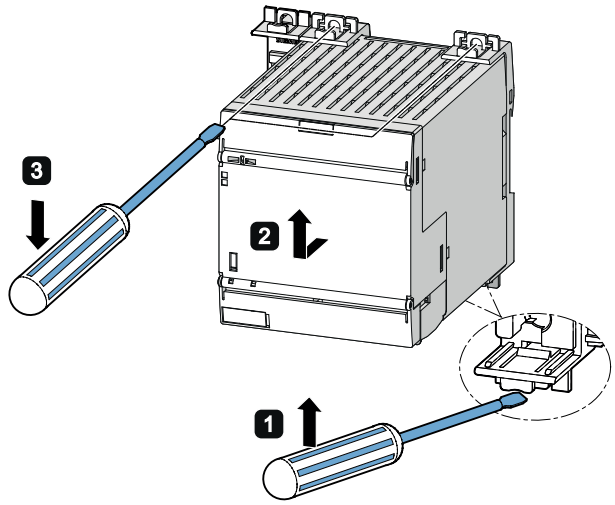
2	Pull the lower half of the device away from the device connector	
3	Unlock the device (top) using a screwdriver	
4	Pull the device away from the device connector	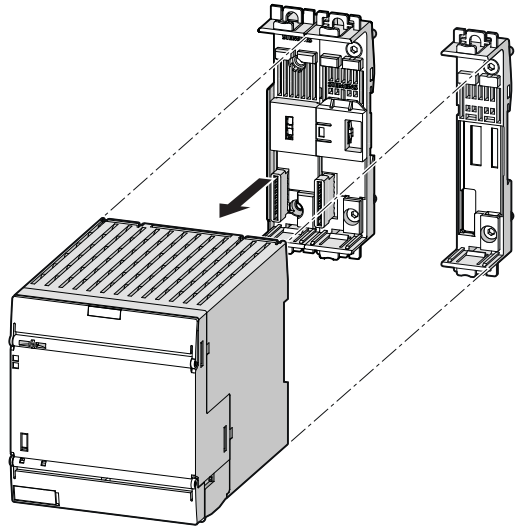

Step	Instructions	Figure
5	Release the screws	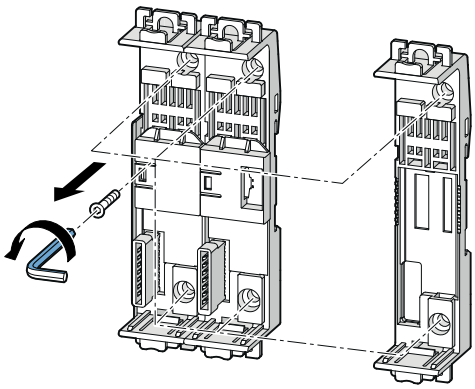
6	Separate the device connectors	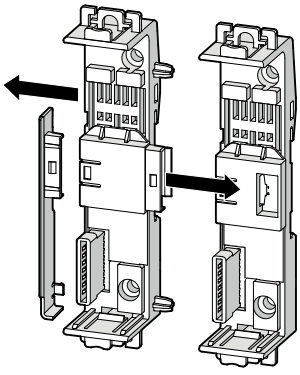
7	Remove the cover	

8.16 Mounting the sealable cover

The sealable cover (3ZY1321-1AA00 for 17.5 mm devices, 3ZY1321-2AA00 for 22.5 mm devices) can be used to secure the DIP switches (and, if present, the rotary switches for setting the delay time) of the safety relays against unauthorized or unintended readjustment.

As an alternative, Siemens also offers a sealable membrane (3TK2820-0AA00) for securing the safety relays. The sealable membrane is fixed to the front of the safety relay and secures the DIP switches and the buttons (and rotary switches) against unintentional readjustment.

Mounting the sealable cover

Step	Instructions	Figure
1	Attach the hooks on the cover to the openings on the device and fold the cover up	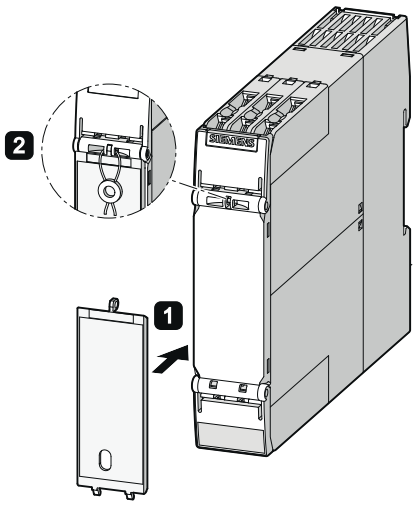
2	Seal the cover to secure it against unauthorized removal. Sealing wire diameter, max.: 2 mm	

Connection

9

9.1 22.5 mm/17.5 mm devices

9.1.1 Terminal assignment

Location of the connections

The inside faces of the terminal covers are labeled with the designations of the relevant terminals. The position of the label corresponds to the position of the respective terminal.

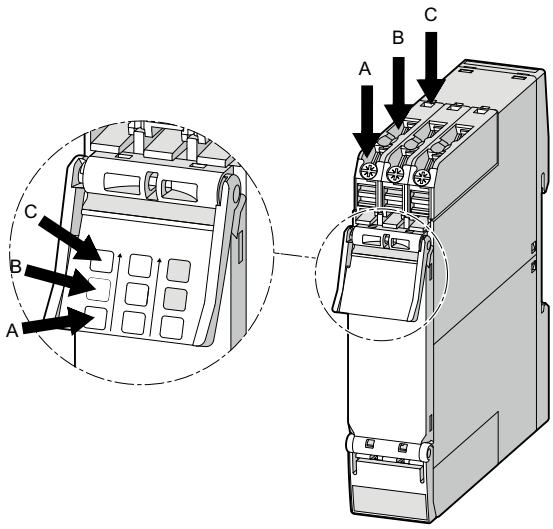

Figure 9-1 Upper terminal cover

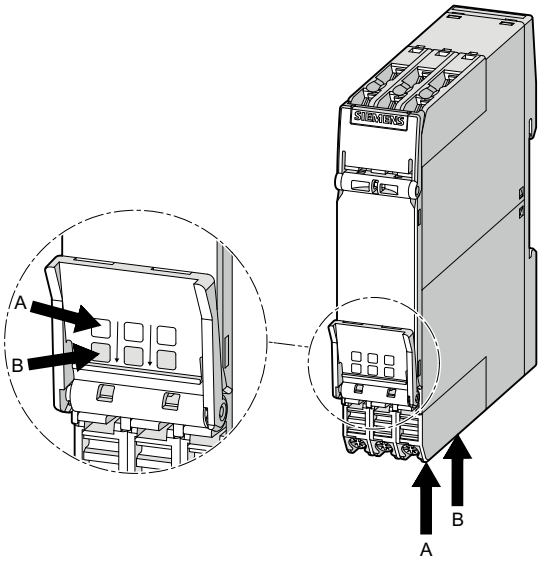

Figure 9-2 Lower terminal cover

9.1.2 Connection data for terminals

	Specification and value in the case of removable terminals with screw-type terminals	Specification and value in the case of removable terminals with Push-In terminals
Screwdriver 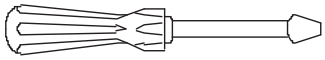	Cross-tip screwdriver Size: PZ 1x80 (⌀ 4.5 mm) Torque: 0.6 to 0.8 Nm	Screwdriver (3RA2908-1A) Size: 3 mm for operating the springs DIN 5264-A; 0.5 x 3
Rigid cable 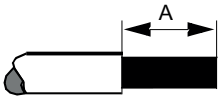	A = 10 mm 1 x 0.5 ... 2.5 mm² 2 x 1.0 ... 1.5 mm²	A = 10 mm 1 x 0.5 ... 1.5 mm² 2 x 0.5 ... 1.5 mm²
Flexible conductor with end sleeve 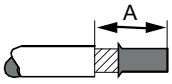	A = 10 mm 1 x 0.5 ... 2.5 mm² 2 x 0.5 ... 1.0 mm²	A = 10 mm 1 x 0.5 ... 1.0 mm² 2 x 0.5 ... 1.0 mm²
Flexible cable 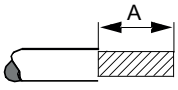	Not permissible	1 x 0.5 ... 1.5 mm² 2 x 0.5 ... 1.5 mm²
AWG	1 x 20 to 14 2 x 18 to 16	1 x 20 to 16 2 x 20 to 16

9.1.3 Connecting the screw-type terminals

⚠ WARNING
Hazardous Voltage **Can Cause Death, Serious Injury, or Property Damage.** Before starting work, therefore, disconnect the system and devices from the power supply.

Requirements

- Cross-tip screwdriver size PZ 1 x 80.
- For suitable connection cross-sections of the cables, see the chapter "Connection data for terminals (Page 161)".

Procedure

Step	Instructions	Figure
1	Insert the relevant cable into square on the screw-type terminal until it engages.	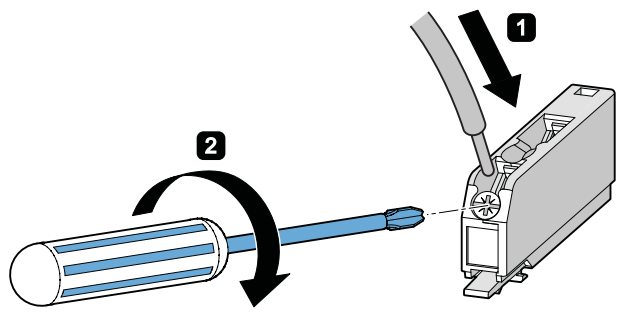
2	Hold the cable in the screw-type terminal.	
3	Tighten the screw with a torque of 0.8 to 1.2 N.	
4	Pull on the cable to ensure it is screwed tight.	

9.1.4 Disconnecting the screw-type terminals

WARNING

Hazardous Voltage
Can Cause Death, Serious Injury, or Property Damage.

Before starting work, therefore, disconnect the system and devices from the power supply.

Requirements

- Cross-tip screwdriver size PZ 1 x 80

Procedure

Step	Instructions	Figure
1	Unscrew the screw of the screw-type terminal.	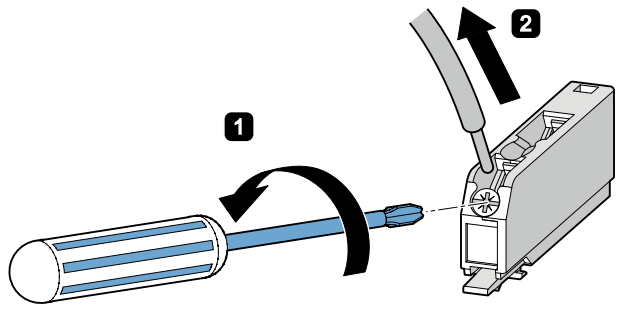
2	Remove the cable from the unscrewed screw-type terminal.	

9.1.5 Connecting the push-in terminals

WARNING

Hazardous Voltage
Can Cause Death, Serious Injury, or Property Damage.

Before starting work, therefore, disconnect the system and devices from the power supply.

Push-in connections are a form of spring-loaded terminals allowing wiring without tools for rigid conductors or conductors equipped with end sleeves.

For wiring finely-stranded or stranded conductors without end sleeves on push-in connections, a screwdriver is required.

Requirements

- 0.5 x 3 mm screwdriver DIN 5264 (for finely-stranded conductors only).
- For suitable connection cross-sections of the cables, see the chapter "Connection data for terminals (Page 161)".

Procedure

Table 9- 1 Rigid conductors or conductors equipped with end sleeves

Step	Instructions	Figure
1	Insert the cable into the oval opening as far as it will go.	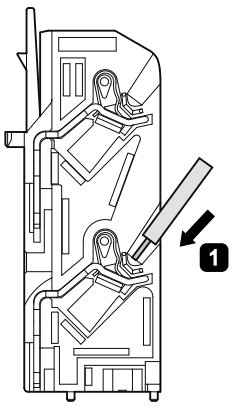
2	Pull on the cable to ensure it is tight.	

Table 9- 2 Finely-stranded conductors

Step	Instructions	Figure
1	Insert the screwdriver in the rectangular opening to open the terminal (oval opening).	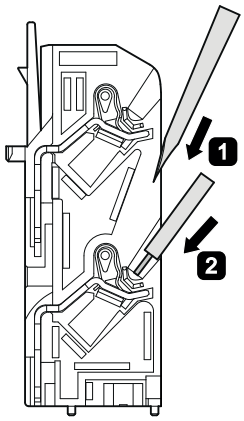
2	Insert the cable as far as it will go into the oval opening and remove the screwdriver.	
3	Pull on the cable to ensure it is tight.	

9.1.6 Disconnecting the push-in terminals

⚠ WARNING
Hazardous Voltage **Can Cause Death, Serious Injury, or Property Damage.** Before starting work, therefore, disconnect the system and devices from the power supply.

Requirements

- Screwdriver DIN 5264 of the size 0.5 x 3 mm

Procedure

Step	Instructions	Figure
1	Insert the flat-head screwdriver into the rectangular opening of the spring-loaded terminal until it engages.	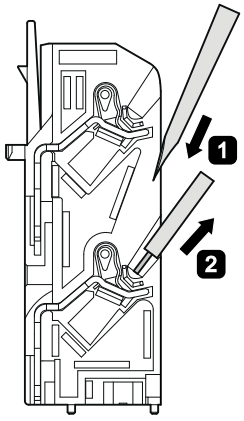
2	Remove the cable from the oval opening.	
3	Remove the screwdriver.	

9.1.7 Attaching the terminals

⚠ WARNING
Hazardous Voltage **Can Cause Death, Serious Injury, or Property Damage.** Before starting work, therefore, disconnect the system and devices from the power supply.

Requirements

You must have removed the terminal blocks, for the purpose of replacing a device, for example.

Procedure when plugging in the terminal blocks

Step	Instructions	Figure
1	Insert the removable terminal block into the guide rail of the device.	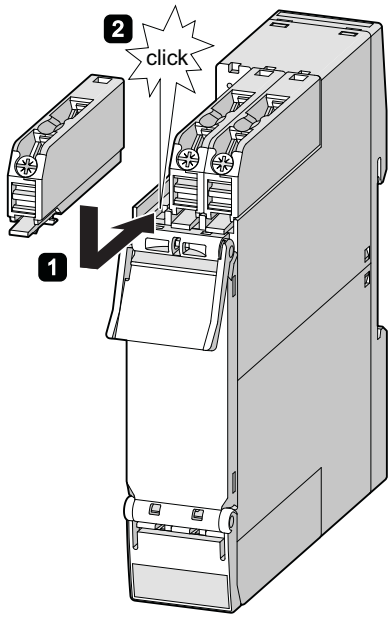
2	Slide the removable terminal block back until it audibly engages.	

9.1.8 Disconnecting

⚠ WARNING
Hazardous Voltage Can Cause Death, Serious Injury, or Property Damage. Before starting work, therefore, disconnect the system and devices from the power supply.

Removing terminal blocks from the device

Step	Instructions	Figure
1	Press the clip of the terminal block upwards.	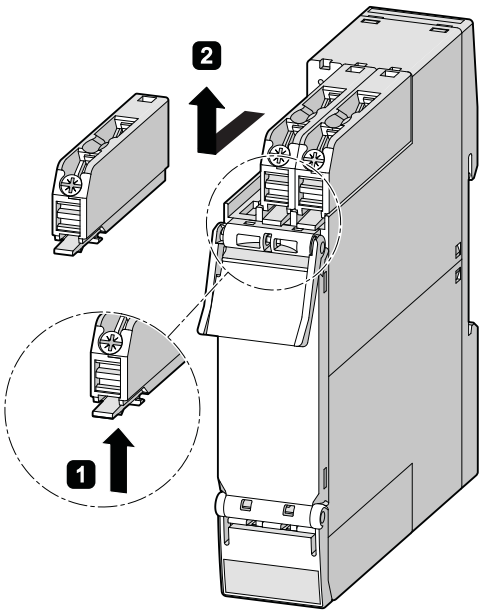
2	Pull the terminal block out to the front.	
3	Lift the terminal block out of the guide rail of the device.	

Screw terminals: Disconnecting the conductor

Step	Instructions	Figure
1	Unscrew the screw of the screw-type terminal.	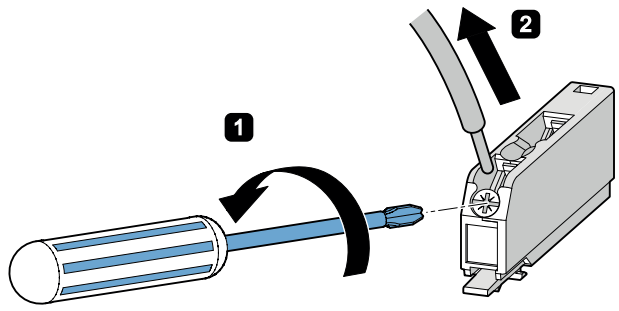
2	Remove the cable from the unscrewed screw-type terminal.	

Push-in terminals: Disconnecting the conductor

Step	Instructions	Figure
1	Insert the flat-head screwdriver into the square opening of the push-in terminal until it engages. Please observe a 10° horizontal angular deviation of the screwdriver to the oval opening.	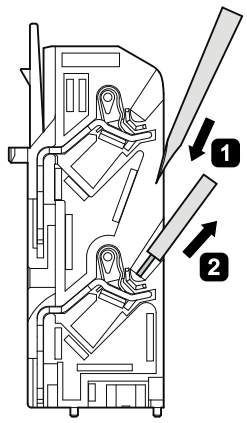
2	Remove the cable from the oval opening.	
3	Remove the screwdriver.	

9.2 Devices 90 mm

9.2.1 Opening the terminal cover

⚠ WARNING
Hazardous Voltage
Can Cause Death, Serious Injury, or Property Damage.
Before starting work, therefore, disconnect the system and devices from the power supply.

Positions of the terminals and opening the terminal cover

Ther removable terminals are located under the **lower** terminal cover.

To open the terminal cover, press on it in the middle ① and lift it up ②.

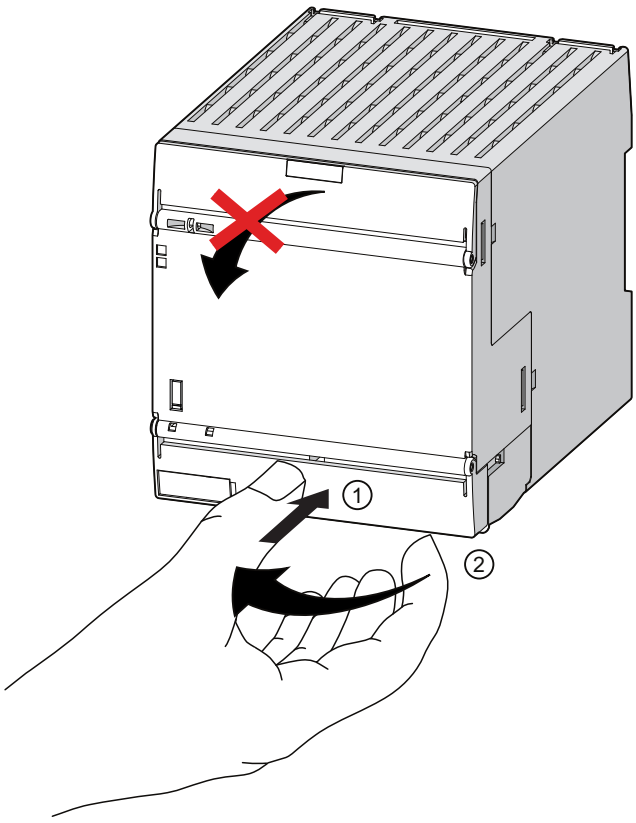

9.2.2 Connection data for terminals

	Screwdriver for removable terminals with screw-type terminals	Screwdriver for removable terminals with spring-loaded terminals
Screwdriver 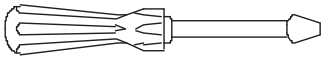	Cross-tip screwdriver Size: PZ 1 (⌀ 4 mm) Torque: 0.8 to 1.2 Nm	Screwdriver Size: 0 or 1 (width to 3 mm) for raising the terminal springs DIN 5264-A; 0.5 x 3
Rigid cable 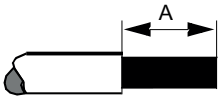	A = 10 mm 1 x 0.5 ... 4.0 mm² 2 x 0.5 ... 2.5 mm²	A = 10 mm 1 x 0.5 ... 1.5 mm² 2 x 0.5 ... 1.5 mm²
Flexible cable with end sleeve/cable lug 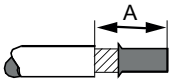	A = 10 mm 1 x 0.5 ... 2.5 mm² 2 x 0.5 ... 1.5 mm²	A = 10 mm 1 x 0.5 ... 1.5 mm² 2 x 0.5 ... 1.5 mm²
Flexible cable 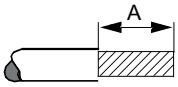	Not permissible	A = 10 mm 1 x 0.5 ... 1.5 mm² 2 x 0.5 ... 1.5 mm²
AWG	1 x 20 to 12 2 x 18 to 14	1 x 20 to 16 2 x 20 to 16

9.2.3 Connecting terminals

⚠ WARNING
Hazardous Voltage **Can Cause Death, Serious Injury, or Property Damage.** Before starting work, therefore, disconnect the system and devices from the power supply.

Procedure for screw-type terminal blocks

Step	Instructions	Figure
1	Insert the relevant cable into square on the screw-type terminal until it engages.	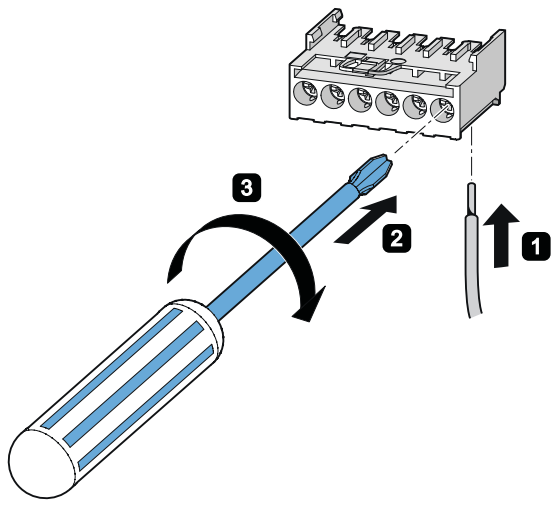
2	Hold the cable in the screw-type terminal.	
3	Tighten the screw of the terminal in which the cable is inserted.	
4	Pull on the cable to ensure it is screwed tight.	

Procedure for spring-loaded terminal blocks

Step	Instructions	Figure
1	To release the clamping springs, insert the flat-head screwdriver as far as it will go into the square opening of the spring-loaded terminal. Please observe a 10° horizontal angular deviation of the screwdriver to the oval opening.	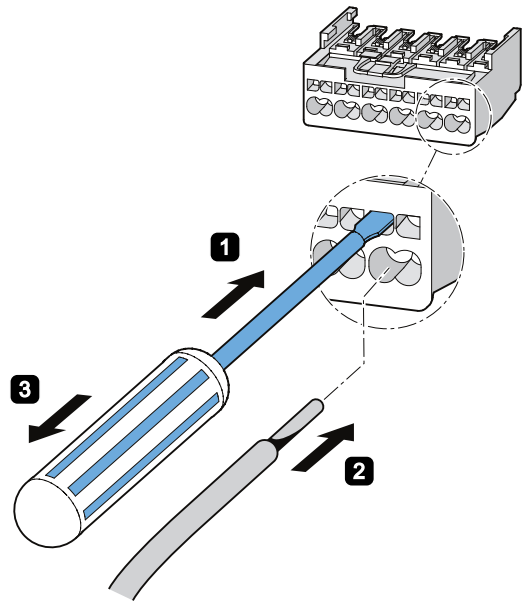
2	Insert the cable into the oval opening as far as it will go.	
3	Hold the cable in the spring-loaded terminal.	
4	Remove the screwdriver.	
5	Pull on the cable to ensure it is tight.	

9.2.4 Mounting terminals

⚠ WARNING
Hazardous Voltage **Can Cause Death, Serious Injury, or Property Damage.** Before starting work, therefore, disconnect the system and devices from the power supply.

Requirements

You must have removed the terminal blocks, for the purpose of replacing a device, for example.

Procedure for mounting terminal blocks

Step	Instructions	Figure
1	Insert the removable terminal block into the guide rail of the device.	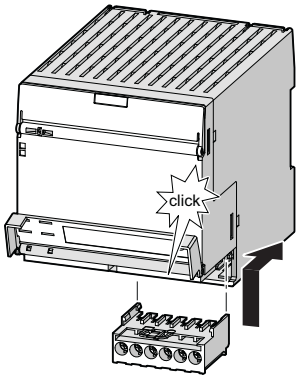
2	Slide the removable terminal block back until it audibly engages.	
3	Check that the clip of the removable terminal block closes flush with the front panel.	

9.2.5 Disconnecting

⚠ WARNING
Hazardous Voltage **Can Cause Death, Serious Injury, or Property Damage.** Before starting work, therefore, disconnect the system and devices from the power supply.

Removing terminals from the device

Step	Instructions	Figure
1	Insert a flat-head screwdriver between the clip of the terminals and the front panel.	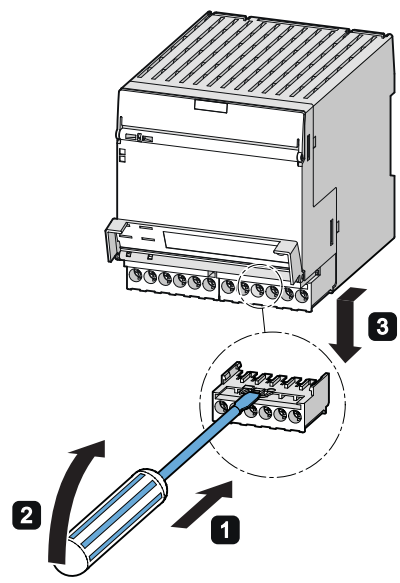
2	Pull the terminals out to the front.	
3	Lift the terminals out of the guide rail of the device.	

Disconnecting screw-type terminals

Step	Instructions	Figure
1	Insert the screwdriver into the screw-type terminal.	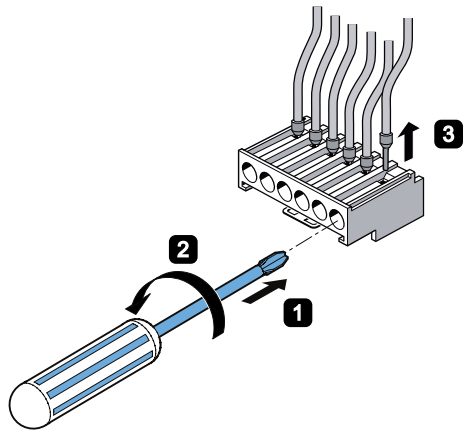
2	Unscrew the screw of the screw-type terminal.	
3	Remove the cable from the unscrewed screw-type terminal.	

Disconnecting spring-loaded terminals

Step	Instructions	Figure
1	Insert the flat-head screwdriver into the rectangular opening of the spring-loaded terminal until it engages. Please observe a 10° horizontal angular deviation of the screwdriver to the oval opening.	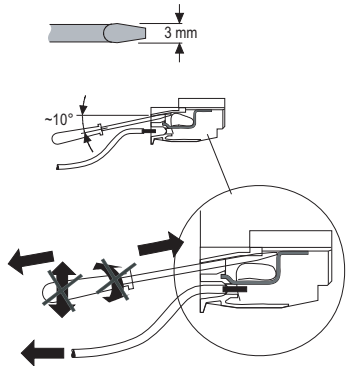
2	Remove the cable from the oval opening.	
3	Remove the screwdriver.	

9.3 Device replacement

WARNING

Hazardous Voltage
Can Cause Death, Serious Injury, or Property Damage.

Before starting work, therefore, disconnect the system and devices from the power supply.

When replacing a device, you do not need to re-wire it. The terminal blocks can be disconnected from the defective device and then connected to the new device.

You can provide the terminal blocks with coding pins. These are to help you avoid errors when replacing the terminal blocks (see the chapter "Terminal coding (Page 124)" for more details).

Replacing the module

WARNING

Hazardous Voltage
Can Cause Death, Serious Injury, or Property Damage.
Carry out function test of the plant

To ensure the safety of the system, a full functional test must be conducted and a successful result obtained after a device has been replaced.

Note

Only replace a defective device with a device of an identical order number.

1. Disconnect the defective device at the terminals.
   - Chapter for 22.5 mm devices Disconnecting (Page 168)
   - Chapter for 90 mm devices Disconnecting (Page 175)
2. Deinstall the defective device.
   - Chapter "Removing devices from a standard mounting rail (Page 131)"
   - Chapter "Removing 22.5 mm/17.5 mm devices with device connectors from a standard mounting rail (Page 135)"
   - Chapter "Removing 90 mm devices with device connectors from a standard mounting rail (Page 141)"

3. Mount the new device
   - Chapter "Mounting the devices on a level surface (Page 125)"
   - Chapter "Mounting the 22.5 mm/17.5 mm device on a standard mounting rail (Page 129)"
   - Chapter "Mounting the 90 mm devices on a standard mounting rail (Page 130)"
   - Chapter "Mounting 22.5 mm/17.5 mm devices with device connectors on the wall (Page 144)"
   - Chapter "Mounting 90 mm devices with device connectors on the wall (Page 151)"
4. Connect the defective device at the terminals
   - Chapter for 22.5 mm devices "Connecting the screw-type terminals (Page 162)", "Connecting the push-in terminals (Page 164)" and "Attaching the terminals (Page 167)"
   - Chapter for 90 mm devices "Connecting terminals (Page 172)" and "Mounting terminals (Page 174)"

After applying the supply voltage, the new 3SK1 basic unit checks whether the hardware configuration matches the device configuration.

If there are no deviations, the system re-enters safety mode.

Configuration / operation 10

10.1 Procedure for configuration

General information:

- It is only possible to change the configuration (DIP switch, NC/NO evaluation, potentiometer, input and output expansion) in configuration mode. Modifications during operation are not accepted.
- A configuration change (DIP switch, NC/NO evaluation, potentiometer) is indicated in safety mode by the "DEVICE" LED flashing green/yellow, but does not change the device function.
- In safety mode, if a change in the system configuration (input and output expansion) is detected, the device switches to error mode ("DEVICE" LED and "SF" LED red). A restart is only possible using Power OFF/ON.

Procedure for configuring a basic unit

1. Set the configuration (DIP, PAR, potentiometer, input expansion, output expansion) in accordance with the desired function.
2. Connect the power supply.
3. If the device detects a modified configuration, it remains in configuration mode (LEDs flash) during power up.
4. Confirm the new configuration by operating the SET/RESET pushbutton for more than 1s.
5. The configuration has been accepted and the device changes to safety mode.

Note

Configuration and setting the delay time

A change to the configuration must only ever be carried out when the system is disconnected from the power.

In safety mode, an adjustment to the potentiometer does not result in a change to the parameterized delay time.
A change to the potentiometer setting made during operation is not accepted and is indicated in safety mode by a yellow/green flashing "DEVICE" LED. The device can be restarted by performing a RESET (pressing the SET/RESET button) or by disconnecting and reconnecting the supply voltage. Following a restart, the device remains in safety configuration mode during power up (all enabling circuits are shut down) until the new delay time is accepted by pressing the SET/RESET button.

10.2 Explanation of the device's functions

Explanation of the device's functions (DIP switches)

DIP switch	Parameter	Function
1	Start type	• **Autostart:** The enabling circuits are switched to the active position as soon as the switch-on condition is satisfied at the sensor inputs IN1, IN2, INF and 1. The START button connection terminal INS is not queried. • **Monitored start:** The enabling circuits are switched to the active position as soon as the switch-on condition is met at the sensor inputs IN1, IN2, INF and 1 and the START button at the terminal INS is actuated (start with the falling edge).
2	Cross-circuit detection	Cross-circuit detection is only possible with floating sensors. The sensors must be switched between T1 - IN1 and T2 – IN2 for this purpose. On terminals IN1 and PAR (if used), the device expects the test signal of terminal T1; and on terminals IN2 and INF , it expects the test signal of T2 . The device detects a sensor fault if the signal at terminals IN1, PAR or IN2, INF does not agree with test signals T1, T2. Cross-circuit detection must be deactivated if electronic sensors such as light arrays or laser scanners are connected. The 3SK1 now no longer monitors the sensor inputs for cross-circuit detection. Usually, the outputs of safety sensors (OSSD) are already monitored for cross-circuits in the sensor. Devices with PAR terminals expect the test signal T2 at the parameterization input. A 24 V signal at the PAR or INF terminals results in a fault (cross-circuit at the input).
3	Type of connection	• **1 sensor with 2 contacts** (1 x 2-channel) (NC/NC). It is expected here that both contacts were open simultaneously. With the additional connection of T1 to PAR, this DIP parameterization applies for ONE 2-channel sensor with NC/NO contacts. • **2 sensors with one contact each** (2x single-channel) (NC/NC). It is expected that both sensors are ANDed. Simultaneity is not monitored.
4	Startup testing	After a power failure, startup testing requires that the sensors at IN1 and IN2are actuated once by the system operator.

Function of the cascading input (terminal INK)

1. Safe combination of safety relays
   In this application, a higher-level safety relay switches off the 3SK1 safety relay via the cascading input via a safe output.
   Example:
   an EMERGENCY STOP circuit is to deactivate the entire installation as a higher-level circuit.
   Several function groups (e.g., protective doors) that disconnect locally can be operated as subordinate units.

   WARNING

   Application / safety relay safety level

   The safety level (PL/SIL) of the application corresponds to the lowest safety level of a subsystem of the application when errors are excluded (protected wiring of the control cable).

2. Additional safety sensor circuit
   The cascading input INK is ANDed with sensor inputs IN1, IN2 .
   PL c in accordance with ISO 13849-1, or SIL1 in accordance with IEC 62061 can be achieved if the cascading input is wired with single-channel (positive opening) safety sensors (supply via A1 / +24 V (identical potential to A1)) and if the connecting cable is laid in a protected fashion. The start function for the cascading input INK corresponds to the start response of sensor inputs IN1 and IN2 (autostart or monitored start).
   The cascading input INK can be triggered with floating or solid-state contact blocks (switching to P potential). Floating contact blocks must be connected between A1 / +24 V (identical potential to A1) and the cascading input.

3. Normal switching duty
   The cascading input INK can also be used for normal switching duty (not safe). The cascading input INK can be activated in this case with floating contact blocks or with solid-state contact blocks (switching to P potential).
   Floating contact blocks can be connected between A1 / +24 V and INK .
   It is important to note that the start function of cascading input INK corresponds to the start function of sensor inputsIN1, IN2 .

When using a 3SK1 safety relay with instantaneous and time-delayed contacts, the two following safety notes must always be observed:

NOTICE
In the event of external faults such as: • Cross-circuit fault • Short circuit to ground • Current-source short circuit and to access the configuration mode for copying a delay time after a reset, the following device behavior must always be taken into account: The outputs of stop category 0 switch instantaneously, while the outputs of stop category 1 have a time delay. The sequence cannot be interrupted. Exception: Switching off the power supply.

NOTICE
If the safe state is restored during the time delay, (e.g. the protective door is closed) and the START button is actuated, the enabling circuits switch to the active position immediately after the delay time has elapsed. The actuation of the START button is saved.

NOTICE
Observe the following in the case of protective doors with tumblers: If the voltage Us is disconnected on devices with time-delayed outputs between switching the instantaneous outputs and the time-delayed outputs, the delay time expires when the voltage Us is restored, and the time-delayed contacts change their switch positions.

10.3 Modes

The 3SK1 safety relays have four main operating modes:

- Power-up
- Configuration mode
- Safety mode
- Error mode

Power-up

On powering up (up to 7 seconds), the 3SK1 safety relay runs through a complete function test.

Configuration mode

A saved configuration can only be modified in configuration mode.

The configuration must only ever be modified after disconnecting the power supply.

If the device detects a configuration change during the restart (DIP, PAR, potentiometer, input expansion, output expansion), it does not change automatically to safety mode after power up, but instead remains in configuration mode.
In configuration mode, the LEDs (yellow) whose DIP switch position is ON (right) flash; all other parameter settings are not explicitly indicated.

The configuration is accepted by pressing the SET/RESET button for approximately 1s.

In configuration mode, the device is in the safe state. No monitoring functions are active.

Note

A configuration change made during operation is not accepted, and in safety mode, this is indicated by a yellow/green flashing "DEVICE" LED. The device can be restarted by performing a RESET (pressing the SET/RESET button) or by disconnecting and reconnecting the supply voltage.

Safety mode (DEVICE LED: green)

In safety mode, all monitoring functions are active in accordance with the set configuration.

Note

Parameterized startup testing is indicated by a green flashing "DEVICE" LED. Only when this has been successfully executed does the "DEVICE" LED show a green light.

Error mode

Error mode is indicated by a red "DEVICE" LED or by a red "SF" LED. In error mode, the device **ALWAYS** changes to the safe state.

10.4 Response times

10.4.1 Response times

Verification of response times in the case of safety circuits

When safety equipment is commissioned, steps must be taken to verify that a safety-related output will switch off within a maximum permissible response time if the input signal changes at the relevant input.

To provide this verification, you must determine the total response time of the application you have configured.

Note

Note that the calculation of the response time affects the level of safety and governs the overall design of the system.

You can find the response data of the safety relays in the technical data of the respective devices in the chapter Technical data (Page 193).

Commissioning 11

Note

Since commissioning of the 3SK1 safety relays is an important, safety-related step, it must be carried out by qualified personnel.

⚠ WARNING

Hazardous Voltage

Can Cause Death, Serious Injury, or Property Damage.
Carry out function test of the plant.

To ensure the safety of the system, a full functional test of the system must be conducted after commissioning, and a successful result obtained.

Commissioning the 3SK1safety relays

The 3SK1 safety relays are commissioned by applying the operating voltage.

After the supply voltage has been applied, all LEDs show a green light for about 1 s (lamp test). The LEDs then go out for approx. 0.5 s. The configuration of the device is then displayed on the configuration LEDs for approx. 3 s.

If a valid configuration is set and the potentiometer setting has been left unchanged, the device is now ready for operation and is in safety mode.

If no configuration change (DIP, PAR, potentiometer, input expansion, output expansion) has been detected, the device changes automatically to safety mode and is ready for operation. However, if the device detects a deviation of the set parameters from the saved configuration, it remains in safe configuration mode until the new configuration is accepted by pressing the SET/RESET button.

Note

Observe the following during commissioning:

The cascading input must be jumpered (24 V DC) if it is not to be used.

Monitoring of the feedback circuits is not optional.

Display and diagnostics 12

12.1 LED display

The LED indications of the Advanced safety relays are shown in the tables below. You can find the LED indications of the Standard safety relays in the chapter "Display of the operating state (Page 47)".

LED	Display	Explanation
(1) DEVICE	OFF*	No voltage, group error Configuration mode DIP (1) position: **left**
	Green	Device is ready for operation Power-up: hardware test
	Green flashing	Missing startup testing Short-circuit on the SET/RESET button
	Yellow	Power-up DIP (1) position: **right**
	Yellow flashing	Configuration mode DIP (1) position: **right**
	Green/yellow flashing	Configuration changed
	Red	Device error
(2) OUT	OFF*	Output inactive Configuration mode DIP (2) position: **left**
	Green	Output active Power-up: hardware test
	Green flashing	Feedback circuit error Short-circuit on the SET/RESET button
	Yellow	Power-up DIP (2) position: **right**
	Yellow flashing	Configuration mode DIP (2) position: right START button pressed too long
	Green/yellow flashing	Instantaneous outputs inactive, delayed outputs active

LED	Display	Explanation
(3) IN	OFF*	Start conditions not fulfilled Configuration mode DIP (3) position: **left**
	Green	Start conditions fulfilled Power-up: hardware test
	Green flashing	• For 1x2-channel: Simultaneity of sensors not fulfilled • For two-hand operation: time monitoring violated • For monitored start: START button not yet pressed Short-circuit on the SET/RESET button
	Yellow	Power-up DIP (3) position: **right**
	Yellow flashing	Short-circuit of T1/T2 to ground or 24 V With input expansion: missing enabling signal of input expansion Group error: Cross-circuit at input Configuration mode DIP (3) position: **right**
	Flickering yellow	Configuration mode: Special configuration, two-hand operation
	Flickering red	Configuration mode: impermissible configuration
(4) SF	OFF*	No group error Configuration mode DIP (4) position: **left**
	Green	Power-up: hardware test
	Green flashing	Short-circuit on the SET/RESET button
	Yellow	Power-up DIP (4) position: **right**
	Yellow flashing	Configuration mode DIP (4) position: **right**
	Red	Group error (e.g. cross-circuit at input, short-circuit to P, device configuration changed)
	Red flashing	Error message (e.g. short-circuit T1/T2, violation of simultaneity, violation of time monitoring two-hand operation, feedback circuit error, START-button pressed too long)

* LED flashes briefly in configuration mode due to lamp test

12.2 Power-up

Display mode during power-up / parameterization in configuration mode

LED	Display	Explanation
(1) DEVICE	Yellow or yellow flashing	Monitored start
	Off	Autostart
(2) OUT	Yellow or yellow flashing	Cross-circuit detection ON
	Off	Cross-circuit detection off
(3) IN	Yellow or yellow flashing	1 x two-channel
	Flickering yellow	Configuration mode: Special configuration, two-hand operation
	Flickering red	Configuration mode: impermissible configuration
	Off	2 x single-channel
(4) SF	Yellow or yellow flashing	Startup testing off
	Off	Startup testing ON

12.3 Error statuses

LED	Display	Explanation
(1) DEVICE	Red	Device error
(4) SF	Red	Group error
	Red flashing	Fault message

12.4 Diagnostics

Power-up

Explanation	DEVICE	OUT	IN	SF
Hardware test (Note: input expansions remain in this state until acknowledged by the device on the right-hand side)	Green	Green	Green	Green
The SET/RESET button is stuck, or has been pressed too long. The device remains in this state until the button is released again.	Green flashing	Green flashing	Green flashing	Green flashing
Display of DIP switch configuration	If the DIP switch position is at ON (right), the relevant LED shows a yellow light			

Configuration

Explanation	DEVICE	OUT	IN	SF
Indication of a modified configuration	If the DIP switch position is at ON (right), the relevant LED flashes yellow			
Special configuration, two-hand operation (NC/NO, autostart, 2x1-channel)	Off	If the DIP switch position is at ON (right), the relevant LED flashes yellow	Flickering yellow	If the DIP switch position is at ON (right), the relevant LED flashes yellow
Impermissible configuration (NC/NO, monitored start, 2x1-channel)	Yellow flashing	If the DIP switch position is at ON (right), the relevant LED flashes yellow	Flickering red	If the DIP switch position is at ON (right), the relevant LED flashes yellow
All DIP switches are at OFF (left)	All LEDs light up briefly (yellow) at intervals			

Safety mode

Explanation	DEVICE	OUT	IN	SF
No startup testing	Green flashing	Off	Off	Off
Device ready for operation, all outputs OFF	Green	Off	Off	Off
Device ready for operation, all outputs ON	Green	Green	Green	Off
Device ready for operation, instantaneous outputs OFF, time-delayed outputs ON	Green	Green/yellow flashing	Off	Off
For monitored start: START button not yet pressed	Green	Off	Green flashing	Off
With input expansion: missing enabling signal of input expansion	Green	Off	Yellow flashing	Off
Configuration has been changed (PAR, DIP switch, potentiometer)	Green/yellow flashing	— [1]	— [1]	— [1]
For 1x2-channel: Simultaneity violated, For two-hand operation: time monitoring violated	Green	Off	Green flashing	Red flashing
Short-circuit test clock output T1 or T2	Green[2]	Off	Yellow flashing	Red flashing
For monitored start: START button was pressed too long or has a short-circuit	Green	Yellow flashing	Off	Red flashing
Feedback circuit error	Green	Green flashing	Green	Red flashing

[1] Dependent on device status

[2] Green flashing DEVICE LED: No startup testing

Error mode

Explanation	DEVICE	OUT	IN	SF
Device fault (restart possible by pressing the SET/RESET button)	Red	Off[3)]	Off[3)]	Off[3)]
Group error (restart possible by pressing the SET/RESET button)	Off[3)]	Off[3)]	Off[3)]	Red
Group error, cross-circuit at the input (restart possible by pressing the SET/RESET button)	Off[3)]	Off[3)]	Flashing yellow[3)]	Red
System stop (restart possible by disconnecting and re-connecting the operating voltage)	Red	Off[3)]	Off[3)]	Red

3) On time-delayed devices, the LED flashes green/yellow provided the time-delayed outputs are still switched on

Technical data

13

13.1 General technical data

Technical data valid for all 3SK1 products in this manual.

Product brand name		SIRIUS
Product designation		Safety relay
Version of the product		for EMERGENCY STOP and protective doors
IP degree of protection of the enclosure		IP20
Touch protection against electric shock		Safe from finger-touch
Ambient temperature • **during storage** • **during operation**	°C	 -40 ... +80 -25 ... +60
Air pressure Comply with the instructions given for the respective device • **according to SN 31205**	hPa	900 ... 1060
Relative air humidity • **During operation without condensation**	%	10 ... 95
Maximum operating altitude above MSL	m	2000
Vibration resistance according to IEC 60068-2-6		5 ... 500 Hz: 0.75 mm
Degree of pollution		3
Overvoltage category		III
Distance to be maintained at the side with side-by-side mounting	mm	0
Distance to be maintained at the side from grounded parts	mm	5
DC_{avg} average diagnostics coverage level		> 99 %
$MTTF_d$ Mean Time To dangerous Failure		> 30 years
Item designation In accordance with DIN 40719, expanded in accordance with IEC 204-2 and IEC 750		-
Item designation in accordance with DIN EN 61346-2		F
Hardware failure tolerance in accordance with IEC 61508		1

Mounting position		Any (except 3SK1213) 3SK1213: +/- 22.5° lateral inclination	
Type of fixing		Snap-on mounting Comply with the instructions given for the respective device	
Type of electrical connection		3SK....-1.... screw-type	3SK....-2.... push-in connection
Maintenance		The 3SK1 safety relays are maintenance-free	
Certificate of suitability • TÜV approval • UL certification • CSA approval		Yes (except 3SK1230) Yes Yes	

Electrical service life (B10 values) of the 3SK1 safety relays

Note

When using the devices to equip furnaces to DIN EN 50156-1, the load (utilization category) listed below must not be exceeded.

Electrical service life ≥ 250000 operating cycles at:

Utilization category	3SK111; 3SK1121; 3SK1211	3SK1213
AC-1, 240 V	1.5 A	10.0 A
AC-15, 240 V	0.2 A	10.0 A
DC-13, 24 V	2.0 A	3.0 A

$B10_d$ values for the 3SK1 safety relays

Device versions:

3SK1121-.AB40
3SK1111-.AB30
3SK1111-.AW20
3SK1211-.BB40
3SK1211-.BB00
3SK1211-.BW20

Utilization category	Ue (V)	Ie (A)	$B10_d$ value (operating cycles)
AC-1	240	5	500000
		4	860000
		2	1300000
AC-15	240	4	300000
		3	850000
		1	1100000
DC-13	24	5	300000
		2	2000000
		1	7000000

Device version:
3SK1121-.CB4.

Utilization category	Ue (V)	Ie (A)	$B10_d$ value (operating cycles)
AC-1	240	5	500000
		4	600000
		2	1000000
AC-15	240	3	400000
		0.1	10000000
DC-13	24	3	450000
		1	2000000

Device versions:
3SK1213-.AB40
3SK1213-.AJ20
3SK1213-.AL20

Utilization category	Ue (V)	Ie (A)	$B10_d$ value (operating cycles)
AC-1	240	10	1370000
AC-15	240	10	1370000
DC-13	24	6	1370000

PFHD and PFDavg values of the 3SK1 safety relays

The table below shows the values of the:

- Average frequency of a hazardous failure of the safety function per hour **(PFH)** at a high demand rate in accordance with IEC 61508.
- Average probability of failure of the safety function upon demand **(PFDavg)** at a low demand rate in accordance with IEC 61508.

Safety relay	PFH [1/h] less than	PFDavg less than
3SK1111-.AB30	1.7 E^{-09}	1.0 E^{-06}
3SK1111-.AW20	1.5 E^{-09}	1.0 E^{-06}
3SK1112-.BB40	1.0 E^{-09}	7.0 E^{-06}
3SK1121-.AB40	2.5 E^{-09}	7.0 E^{-06}
3SK1121-.CB41	3.7 E^{-09}	7.0 E^{-06}
3SK1121-.CB42	3.7 E^{-09}	7.0 E^{-06}
3SK1121-.CB44	3.7 E^{-09}	7.0 E^{-06}
3SK1122-.AB40	1.3 E^{-09}	7.0 E^{-06}
3SK1122-.CB41	1.5 E^{-09}	7.0 E^{-06}
3SK1122-.CB42	1.5 E^{-09}	7.0 E^{-06}
3SK1122-.CB44	1.5 E^{-09}	7.0 E^{-06}
3SK1120-.AB40	1.3 E^{-09}	7.0 E^{-06}
3SK1211-.BB40	1.7 E^{-09}	1.0 E^{-06}
3SK1211-.BB00	1.7 E^{-09}	1.0 E^{-06}
3SK1211-.BW20	1.7 E^{-09}	1.0 E^{-06}
3SK1213-.AB40	1.0 E^{-09}	1.0 E^{-06}
3SK1213-.AJ20	1.0 E^{-09}	1.0 E^{-06}
3SK1213-.AL20	1.0 E^{-09}	1.0 E^{-06}
3SK1220-.AB40	1.0 E^{-09}	7.0 E^{-06}

You will find further technical data in the "Technical Data" chapters of each product and in the "Dimension Drawings" chapter.

13.2 Basic units

13.2.1 Standard

13.2.1.1 Technical data for 3SK1111 Standard relay basic unit

		3SK1111-.AB..	3SK1111-.AW..
Insulation voltage rated value	V	300	
Resistance against shock		10g / 11 ms	
Number of sensor inputs 1-channel or 2-channel		1	
Design of the cascading		none	
Type of the safety-related wiring of the inputs		single-channel and two-channel	
Product feature transverse contact-secure		Yes	
Safety Integrity Level (SIL)			
• according to IEC 61508		SIL3	
• for delayed release circuit according to IEC 61508		—	
Performance Level (PL)			
• according to ISO 13849-1		e	
• for delayed release circuit according to ISO 13849-1		—	
Category according to ISO 13849-1		4	
T1 value for proof test interval or service life according to IEC 61508	a	20	
Safety device type according to IEC 61508-2		Type A	

		3SK1111-.AB..	3SK1111-.AW..
Number of outputs			
• as contact-affected switching element			
– as NC contact for reporting function delayed switching		0	
– as NC contact for reporting function instantaneous switching		1	
– as NC contact safety-related delayed switching		0	
– as NC contact safety-related instantaneous switching		0	
– as NO contact for reporting function delayed switching		0	
– as NO contact for reporting function instantaneous switching		0	
– as NO contact safety-related delayed switching		—	
– as NO contact safety-related instantaneous switching		3	
• as contact-less semiconductor switching element for reporting function delayed switching		—	
• as contact-less semiconductor switching element for reporting function non-delayed		0	
• as contact-less semiconductor switching element safety-related delayed switching		0	
• as contact-less semiconductor switching element safety-related non-delayed		0	
Stop category according to DIN EN 60204-1		0	
Design of the input			
• cascading-input/functional switching		No	
• feedback input		Yes	
• start input		Yes	
Design of the electrical connection jumper socket		No	
Operating cycles maximum	1/h	360	
Switching capacity current of the semiconductor outputs at DC-13 at 24 V	A	—	

		3SK1111-.AB..	3SK1111-.AW..
Switching capacity current of the NO contacts of the relay outputs			
• at DC-13			
– at 24 V	A	5	
– at 115 V	A	0.2	
– at 230 V	A	0.1	
• at AC-15			
– at 115 V	A	4	
– at 230 V	A	4	
Switching capacity current of the NC contacts of the relay outputs			
• at DC-13			
– at 24 V	A	1	
– at 115 V	A	0.2	
– at 230 V	A	0.1	
• at AC-15			
– at 115 V	A	1.5	
– at 230 V	A	1.5	
Thermal current of the contact-affected switching element maximum	A	5	
Total current maximum	A	12	
Mechanical operating cycles as operating time typical		10 000 000	
Max. permissible voltage for safe isolation between electronic evaluation device and enabling circuit according to EN 60947-1	V	—	
Design of the fuse link for short-circuit protection of the NO contacts of the relay outputs required		gL/gG: 6A or circuit breaker type A: 3A or circuit breaker type B: 2A or circuit breaker type C: 1A	
Cable length between sensor and electronic evaluation device with Cu 1.5 mm² and 150 nF/km maximum	m	2 000	

		3SK1111-.AB..	3SK1111-.AW..
Make time			
• with automatic start			
– typical	s	0.2	0.11
– for DC maximum	s	0.32	0.13
– for AC maximum	s	0.32	0.13
– after mains power cut			
– typical	s	0.2	0.11
– maximum	s	0.32	0.13
• with monitored start			
– typical	s	0.015	
– maximum	s	0.02	0.015
Backslide delay time			
• after opening of the safety circuits typical	s	0.01	
• at mains power cut			
– typical	s	0.065	0.2
– maximum	s	0.075	0.3
Adjustable backslide delay time			
• after opening of the safety circuits	s	—	
Recovery time			
• after opening of the safety circuits typical	s	0.01	
• after mains power cut typical	s	0.09	0.32
Pulse duration			
• of the sensor input minimum	s	0.15	
• of the ON pushbutton input minimum	s	0.015	
• of the cascading-entrance minimum	s	—	
Type of voltage of the controlled supply voltage		AC/DC	
Control supply voltage frequency			
• 1 rated value	Hz	50	
• 2 rated value	Hz	60	

		3SK1111-.AB..	3SK1111-.AW..
Control supply voltage			
• for DC rated value	V	24	—
– minimum	V	—	110
– maximum	V	—	240
• at 50 Hz at AC rated value	V	24	—
– minimum	V	—	110
– maximum	V	—	240
• at 60 Hz at AC rated value	V	24	—
– minimum	V	—	110
– maximum	V	—	240
operating range factor control supply voltage rated value of the magnet coil			
• at 50 Hz for AC		0.85	
		1.1	
• at 60 Hz for AC		0.85	
		1.1	
• for DC		0.85	
		1.2	1.1
Active power loss typical	W	2	2.5
Contact reliability of the auxiliary contacts		—	
Product function parameterizable		Sensor floating / sensor non-floating, monitored start / autostart	Sensor floating / monitored start / autostart
Suitability for use device connector 3ZY12		No	
Suitability for interaction pressing control		No	
Suitability for use			
• safety cut-out switch		Yes	
• monitoring of floating sensors		Yes	
• monitoring of non-floating sensors		Yes	No
• magnetically operated switches monitoring		Yes	No
• safety-related circuits		Yes	

13.2.1.2 Technical data for 3SK1112 Standard solid-state basic unit

		3SK1112-.BB..
Insulation voltage rated value	V	50
Resistance against shock		10g / 11 ms
Number of sensor inputs 1-channel or 2-channel		1
Design of the cascading		yes
Type of the safety-related wiring of the inputs		single-channel and two-channel
Product feature transverse contact-secure		Yes
Safety Integrity Level (SIL)		
• according to IEC 61508		SIL3
• for delayed release circuit according to IEC 61508		—
Performance Level (PL)		
• according to ISO 13849-1		e
• for delayed release circuit according to ISO 13849-1		—
Category according to ISO 13849-1		4
T1 value for proof test interval or service life according to IEC 61508	a	20
Safety device type according to IEC 61508-2		Type B
Number of outputs		
• as contact-affected switching element		
– as NC contact for reporting function instantaneous switching		0
– as NO contact for reporting function instantaneous switching		0
– as NC contact for reporting function delayed switching		0
– as NO contact for reporting function delayed switching		0
– as NC contact safety-related instantaneous switching		0
– as NO contact safety-related instantaneous switching		—
– as NC contact safety-related delayed switching		0
– as NO contact safety-related delayed switching		—
• as contact-less semiconductor switching element		
– safety-related		
– delayed switching		0
– non-delayed		2
– for reporting function		
– delayed switching		—
– non-delayed		1
Stop category according to DIN EN 60204-1		0

		3SK1112-.BB..
Design of the input		
• cascading-input/functional switching		Yes
• feedback input		Yes
• start input		Yes
Design of the electrical connection jumper socket		No
Operating cycles maximum	1/h	2 000
Switching capacity current of the semiconductor outputs at DC-13 at 24 V	A	2
Switching capacity current of the NO contacts of the relay outputs		
• at DC-13		
– at 24 V	A	—
– at 115 V	A	—
– at 230 V	A	—
• at AC-15		
– at 115 V	A	—
– at 230 V	A	—
Switching capacity current of the NC contacts of the relay outputs		
• at DC-13		
– at 24 V	A	—
– at 115 V	A	—
– at 230 V	A	—
• at AC-15		
– at 115 V	A	—
– at 230 V	A	—
Thermal current of the contact-affected switching element maximum	A	—
Total current maximum	A	—
Mechanical operating cycles as operating time typical		—
Max. permissible voltage for safe isolation between electronic evaluation device and enabling circuit according to EN 60947-1	V	—
Design of the fuse link for short-circuit protection of the NO contacts of the relay outputs required		not required
Cable length between sensor and electronic evaluation device with Cu 1.5 mm² and 150 nF/km maximum	m	1 000

		3SK1112-.BB..
Make time		
• with automatic start		
– typical	s	—
– for DC maximum	s	0.085
– for AC maximum	s	—
– after mains power cut		
– typical	s	6.5
– maximum	s	6.5
• with monitored start		
– typical	s	—
– maximum	s	0.085
Backslide delay time		
• after opening of the safety circuits typical	s	0.04
• at mains power cut		
– typical	s	0
– maximum	s	0
Adjustable backslide delay time		
• after opening of the safety circuits	s	— —
Recovery time		
• after opening of the safety circuits typical	s	0.03
• after mains power cut typical	s	6.5
Pulse duration		
• of the sensor input minimum	s	0.06
• of the ON pushbutton input minimum	s	0.15
• of the cascading-entrance minimum	s	—
Type of voltage of the controlled supply voltage		DC
Control supply voltage frequency		
• 1 rated value	Hz	—
• 2 rated value	Hz	—

		3SK1112-.BB..
Control supply voltage		
• for DC rated value	V	24
– minimum	V	—
– maximum	V	—
• at 50 Hz at AC rated value	V	—
– minimum	V	—
– maximum	V	—
• at 60 Hz at AC rated value	V	—
– minimum	V	—
– maximum	V	—
Operating range factor control supply voltage rated value of the magnet coil		
• at 50 Hz for AC		— —
• at 60 Hz for AC		— —
• for DC		0.8 1.2
Active power loss typical	W	2
Contact reliability of the auxiliary contacts		—
Product function parameterizable		Sensor floating / sensor non-floating, monitored start / autostart, 1-channel / 2-channel sensor connection, cross-circuit detection, startup testing
Suitability for use device connector 3ZY12		No
Suitability for interaction pressing control		No
Suitability for use		
• safety cut-out switch		Yes
• monitoring of floating sensors		Yes
• monitoring of non-floating sensors		Yes
• magnetically operated switches monitoring		Yes
• safety-related circuits		Yes

13.2.2 Advanced

13.2.2.1 Technical data for 3SK1120 Advanced solid-state basic unit

		3SK1120-.AB..
Insulation voltage rated value	V	50
Resistance against shock		10g / 11 ms
Number of sensor inputs 1-channel or 2-channel		1
Design of the cascading		yes
Type of the safety-related wiring of the inputs		single-channel and two-channel
Product feature transverse contact-secure		Yes
Safety Integrity Level (SIL)		
• according to IEC 61508		SIL3
• for delayed release circuit according to IEC 61508		—
Performance Level (PL)		
• according to ISO 13849-1		e
• for delayed release circuit according to ISO 13849-1		—
Category according to ISO 13849-1		4
T1 value for proof test interval or service life according to IEC 61508	a	20
Safety device type according to IEC 61508-2		Type B
Number of outputs as contact-affected switching element as NO contact safety-related		
• as contact-affected switching element		
– as NC contact for reporting function instantaneous switching		0
– as NO contact for reporting function instantaneous switching		0
– as NC contact for reporting function delayed switching		0
– as NO contact for reporting function delayed switching		0
– as NC contact safety-related instantaneous switching		0
– as NO contact safety-related instantaneous switching		—
– as NC contact safety-related delayed switching		0
– as NO contact safety-related delayed switching		—
• as contact-less semiconductor switching element		
– safety-related		
– delayed switching		0
– non-delayed		1
– for reporting function		
– delayed switching		—
– non-delayed		0

		3SK1120-.AB..
Stop category according to DIN EN 60204-1		0
Design of the input		
• cascading-input/functional switching		Yes
• feedback input		Yes
• start input		Yes
Design of the electrical connection jumper socket		No
Operating cycles maximum	1/h	2 000
Switching capacity current of the semiconductor outputs at DC-13 at 24 V	A	0.5
Switching capacity current of the NO contacts of the relay outputs		
• at DC-13		
– at 24 V	A	—
– at 115 V	A	—
– at 230 V	A	—
• at AC-15		
– at 115 V	A	—
– at 230 V	A	—
Switching capacity current of the NC contacts of the relay outputs		
• at DC-13		
– at 24 V	A	—
– at 115 V	A	—
– at 230 V	A	—
• at AC-15		
– at 115 V	A	—
– at 230 V	A	—
Thermal current of the contact-affected switching element maximum	A	—
Total current maximum	A	—
Mechanical operating cycles as operating time typical		—
Max. permissible voltage for safe isolation between electronic evaluation device and enabling circuit according to EN 60947-1	V	—
Design of the fuse link for short-circuit protection of the NO contacts of the relay outputs required		not required
Cable length between sensor and electronic evaluation device with Cu 1.5 mm² and 150 nF/km maximum	m	1 000

		3SK1120-.AB..
Make time		
• with automatic start		
– typical	s	—
– for DC maximum	s	0.085
– for AC maximum	s	—
– after mains power cut		
– typical	s	6.5
– maximum	s	6.5
• with monitored start		
– typical	s	—
– maximum	s	0.085
Backslide delay time		
• after opening of the safety circuits typical	s	0.04
• at mains power cut		
– typical	s	0
– maximum	s	0
Adjustable backslide delay time		
• after opening of the safety circuits	s	— —
Recovery time		
• after opening of the safety circuits typical	s	0.03
• after mains power cut typical	s	6.5
Pulse duration		
• of the sensor input minimum	s	0.06
• of the ON pushbutton input minimum	s	0.15
• of the cascading-entrance minimum	s	—
Type of voltage of the controlled supply voltage		DC
Control supply voltage frequency		
• 1 rated value	Hz	—
• 2 rated value	Hz	—

		3SK1120-.AB..
Control supply voltage		
• for DC rated value	V	24
– minimum	V	—
– maximum	V	—
• at 50 Hz at AC rated value	V	—
– minimum	V	—
– maximum	V	—
• at 60 Hz at AC rated value	V	—
– minimum	V	—
– maximum	V	—
Operating range factor control supply voltage rated value of the magnet coil		
• at 50 Hz for AC		— —
• at 60 Hz for AC		— —
• for DC		0.8 1.2
Active power loss typical	W	2
Contact reliability of the auxiliary contacts		—
Product function parameterizable		Sensor floating / sensor non-floating, monitored start / autostart, 1-channel / 2-channel sensor connection, cross-circuit detection, startup testing, antivalent sensors, 2-hand switches
Suitability for use device connector 3ZY12		Yes
Suitability for interaction pressing control		No
Suitability for use		
• safety cut-out switch		Yes
• monitoring of floating sensors		Yes
• monitoring of non-floating sensors		Yes
• magnetically operated switches monitoring		Yes
• safety-related circuits		Yes

13.2.2.2 Technical data for 3SK1121 Advanced relay instantaneous basic unit

		3SK1121-.AB..
Insulation voltage rated value	V	300
Resistance against shock		10g / 11 ms
Number of sensor inputs 1-channel or 2-channel		1
Design of the cascading		yes
Type of the safety-related wiring of the inputs		single-channel and two-channel
Product feature transverse contact-secure		Yes
Safety Integrity Level (SIL)		
• according to IEC 61508		SIL3
• for delayed release circuit according to IEC 61508		—
Performance Level (PL)		
• according to ISO 13849-1		e
• for delayed release circuit according to ISO 13849-1		—
Category according to ISO 13849-1		4
T1 value for proof test interval or service life according to IEC 61508	a	20
Safety device type according to IEC 61508-2		Type B
Number of outputs		
• as contact-affected switching element		
– as NC contact for reporting function instantaneous switching		1
– as NO contact for reporting function instantaneous switching		0
– as NC contact for reporting function delayed switching		0
– as NO contact for reporting function delayed switching		0
– as NC contact safety-related instantaneous switching		0
– as NO contact safety-related instantaneous switching		3
– as NC contact safety-related delayed switching		0
– as NO contact safety-related delayed switching		—
• as contact-less semiconductor switching element		
– safety-related		
– delayed switching		0
– non-delayed		0
– for reporting function		
– delayed switching		—
– non-delayed		0
Stop category according to DIN EN 60204-1		0

		3SK1121-.AB..
Design of the input		
• cascading-input/functional switching		Yes
• feedback input		Yes
• start input		Yes
Design of the electrical connection jumper socket		No
Operating cycles maximum	1/h	360
Switching capacity current of the semiconductor outputs at DC-13 at 24 V	A	—
Switching capacity current of the NO contacts of the relay outputs		
• at DC-13		
– at 24 V	A	5
– at 115 V	A	0.2
– at 230 V	A	0.1
• at AC-15		
– at 115 V	A	4
– at 230 V	A	4
Switching capacity current of the NC contacts of the relay outputs		
• at DC-13		
– at 24 V	A	1
– at 115 V	A	0.2
– at 230 V	A	0.1
• at AC-15		
– at 115 V	A	1.5
– at 230 V	A	1.5
Thermal current of the contact-affected switching element maximum	A	5
Total current maximum	A	12
Mechanical operating cycles as operating time typical		10 000 000
Max. permissible voltage for safe isolation between electronic evaluation device and enabling circuit according to EN 60947-1	V	—
Design of the fuse link for short-circuit protection of the NO contacts of the relay outputs required		gL/gG: 6A or circuit breaker type A: 3A or circuit breaker type B: 2A or circuit breaker type C: 1A
Cable length between sensor and electronic evaluation device with Cu 1.5 mm² and 150 nF/km maximum	m	1 000

		3SK1121-.AB..
Make time		
• with automatic start		
– typical	s	—
– for DC maximum	s	0.11
– for AC maximum	s	—
– after mains power cut		
– typical	s	6.5
– maximum	s	6.5
• with monitored start		
– typical	s	—
– maximum	s	0.11
Backslide delay time		
• after opening of the safety circuits typical	s	0.04
• at mains power cut		
– typical	s	0.03
– maximum	s	0.05
Adjustable backslide delay time		
• after opening of the safety circuits	s	— —
Recovery time		
• after opening of the safety circuits typical	s	0.03
• after mains power cut typical	s	6.5
Pulse duration		
• of the sensor input minimum	s	0.075
• of the ON pushbutton input minimum	s	0.15
• of the cascading-entrance minimum	s	—
Type of voltage of the controlled supply voltage		DC
Control supply voltage frequency		
• 1 rated value	Hz	—
• 2 rated value	Hz	—

		3SK1121-.AB..
Control supply voltage		
• for DC rated value	V	24
– minimum	V	—
– maximum	V	—
• at 50 Hz at AC rated value	V	—
– minimum	V	—
– maximum	V	—
• at 60 Hz at AC rated value	V	—
– minimum	V	—
– maximum	V	—
operating range factor control supply voltage rated value of the magnet coil		
• at 50 Hz for AC		—
		—
• at 60 Hz for AC		—
		—
• for DC		0.8
		1.2
Active power loss typical	W	2
Contact reliability of the auxiliary contacts		—
Product function parameterizable		Sensor floating / sensor non-floating, monitored start / autostart, 1-channel / 2-channel sensor connection, cross-circuit detection, startup testing, antivalent sensors, 2-hand switches
Suitability for use device connector 3ZY12		Yes
Suitability for interaction pressing control		No
Suitability for use		
• safety cut-out switch		Yes
• monitoring of floating sensors		Yes
• monitoring of non-floating sensors		Yes
• magnetically operated switches monitoring		Yes
• safety-related circuits		Yes

13.2.2.3 Technical data for 3SK1121 Advanced relay time-delayed basic unit

		3SK1121-.CB.1	3SK1121-.CB.2	3SK1121-.CB.4
Insulation voltage rated value	V	300		
Resistance against shock		10g / 11 ms		
Number of sensor inputs 1-channel or 2-channel		1		
Design of the cascading		yes		
Type of the safety-related wiring of the inputs		single-channel and two-channel		
Product feature transverse contact-secure		Yes		
Safety Integrity Level (SIL)				
• according to IEC 61508		SIL3		
• for delayed release circuit according to IEC 61508		SIL3		
Performance Level (PL)				
• according to ISO 13849-1		e		
• for delayed release circuit according to ISO 13849-1		e		
Category according to ISO 13849-1		4		
T1 value for proof test interval or service life according to IEC 61508	a	20		
Safety device type according to IEC 61508-2		Type B		

		3SK1121-.CB.1	3SK1121-.CB.2	3SK1121-.CB.4
Number of outputs as contact-affected switching element as NO contact safety-related				
• as contact-affected switching element				
– as NC contact for reporting function instantaneous switching		0		
– as NO contact for reporting function instantaneous switching		0		
– as NC contact for reporting function delayed switching		0		
– as NO contact for reporting function delayed switching		0		
– as NC contact safety-related instantaneous switching		0		
– as NO contact safety-related instantaneous switching		2		
– as NC contact safety-related delayed switching		0		
– as NO contact safety-related delayed switching		2		
• as contact-less semiconductor switching element				
– safety-related				
– delayed switching		0		
– non-delayed		0		
– for reporting function				
– delayed switching		—		
– non-delayed		0		
Stop category according to DIN EN 60204-1		0 / 1		
Design of the input				
• cascading-input/functional switching		Yes		
• feedback input		Yes		
• start input		Yes		
Design of the electrical connection jumper socket		No		
Operating cycles maximum	1/h	360		

		3SK1121-.CB.1	3SK1121-.CB.2	3SK1121-.CB.4
Switching capacity current of the semiconductor outputs at DC-13 at 24 V	A	—		
Switching capacity current of the NO contacts of the relay outputs				
• at DC-13				
– at 24 V	A	3		
– at 115 V	A	0.2		
– at 230 V	A	0.1		
• at AC-15				
– at 115 V	A	3		
– at 230 V	A	3		
Switching capacity current of the NC contacts of the relay outputs				
• at DC-13				
– at 24 V	A	—		
– at 115 V	A	—		
– at 230 V	A	—		
• at AC-15				
– at 115 V	A	—		
– at 230 V	A	—		
Thermal current of the contact-affected switching element maximum	A	5		
Total current maximum	A	12		
Mechanical operating cycles as operating time typical		10 000 000		
Max. permissible voltage for safe isolation between electronic evaluation device and enabling circuit according to EN 60947-1	V	—		
Design of the fuse link for short-circuit protection of the NO contacts of the relay outputs required		gL/gG: 6A or circuit breaker type A: 3A or circuit breaker type B: 2A or circuit breaker type C: 1A		
Cable length between sensor and electronic evaluation device with Cu 1.5 mm² and 150 nF/km maximum	m	1 000		

		3SK1121-.CB.1	3SK1121-.CB.2	3SK1121-.CB.4
Make time				
• with automatic start				
– typical	s	—		
– for DC maximum	s	0.11		
– for AC maximum	s	—		
– after mains power cut				
– typical	s	6.5		
– maximum	s	6.5		
• with monitored start				
– typical	s	—		
– maximum	s	0.11		
Backslide delay time				
• after opening of the safety circuits typical	s	0.04		
• at mains power cut				
– typical	s	0.03		
– maximum	s	0.04		
Adjustable backslide delay time				
• after opening of the safety circuits	s	0.05 3	0.5 30	5 300
Recovery time				
• after opening of the safety circuits typical	s	0.03		
• after mains power cut typical	s	6.5		
Pulse duration				
• of the sensor input minimum	s	0.075		
• of the ON pushbutton input minimum	s	0.15		
• of the cascading-entrance minimum	s	—		
Type of voltage of the controlled supply voltage		DC		
Control supply voltage frequency				
• 1 rated value	Hz	—		
• 2 rated value	Hz	—		

		3SK1121-.CB.1	3SK1121-.CB.2	3SK1121-.CB.4
Control supply voltage				
• for DC rated value	V	24		
– minimum	V	—		
– maximum	V	—		
• at 50 Hz at AC rated value	V	—		
– minimum	V	—		
– maximum	V	—		
• at 60 Hz at AC rated value	V	—		
– minimum	V	—		
– maximum	V	—		
Operating range factor control supply voltage rated value of the magnet coil				
• at 50 Hz for AC		— —		
• at 60 Hz for AC		— —		
• for DC		0.8 1.2		
Active power loss typical	W	2.5		
Contact reliability of the auxiliary contacts		—		
Product function parameterizable		Sensor floating / sensor non-floating, monitored start / autostart, 1-channel / 2-channel sensor connection, cross-circuit detection, startup testing, antivalent sensors, 2-hand switches, time delay		
Suitability for use device connector 3ZY12		Yes		
Suitability for interaction pressing control		No		
Suitability for use				
• safety cut-out switch		Yes		
• monitoring of floating sensors		Yes		
• monitoring of non-floating sensors		Yes		
• magnetically operated switches monitoring		Yes		
• safety-related circuits		Yes		

13.2.2.4 Technical data for 3SK1122 Advanced solid-state instantaneous basic unit

		3SK1122-.AB..
Insulation voltage rated value	V	50
Resistance against shock		10g / 11 ms
Number of sensor inputs 1-channel or 2-channel		1
Design of the cascading		yes
Type of the safety-related wiring of the inputs		single-channel and two-channel
Product feature transverse contact-secure		Yes
Safety Integrity Level (SIL)		
• according to IEC 61508		SIL3
• for delayed release circuit according to IEC 61508		—
Performance Level (PL)		
• according to ISO 13849-1		e
• for delayed release circuit according to ISO 13849-1		—
Category according to ISO 13849-1		4
T1 value for proof test interval or service life according to IEC 61508	a	20
Safety device type according to IEC 61508-2		Type B
Number of outputs		
• as contact-affected switching element		
– as NC contact for reporting function instantaneous switching		0
– as NO contact for reporting function instantaneous switching		0
– as NC contact for reporting function delayed switching		0
– as NO contact for reporting function delayed switching		0
– as NC contact safety-related instantaneous switching		0
– as NO contact safety-related instantaneous switching		—
– as NC contact safety-related delayed switching		0
– as NO contact safety-related delayed switching		—
• as contact-less semiconductor switching element		
– safety-related		
– delayed switching		0
– non-delayed		3
– for reporting function		
– delayed switching		—
– non-delayed		1
Stop category according to DIN EN 60204-1		0

		3SK1122-.AB..
Design of the input		
• cascading-input/functional switching		Yes
• feedback input		Yes
• start input		Yes
Design of the electrical connection jumper socket		No
Operating cycles maximum	1/h	2 000
Switching capacity current of the semiconductor outputs at DC-13 at 24 V	A	2
Switching capacity current of the NO contacts of the relay outputs		
• at DC-13		
– at 24 V	A	—
– at 115 V	A	—
– at 230 V	A	—
• at AC-15		
– at 115 V	A	—
– at 230 V	A	—
Switching capacity current of the NC contacts of the relay outputs		
• at DC-13		
– at 24 V	A	—
– at 115 V	A	—
– at 230 V	A	—
• at AC-15		
– at 115 V	A	—
– at 230 V	A	—
Thermal current of the contact-affected switching element maximum	A	—
Total current maximum	A	—
Mechanical operating cycles as operating time typical		—
Max. permissible voltage for safe isolation between electronic evaluation device and enabling circuit according to EN 60947-1	V	—
Design of the fuse link for short-circuit protection of the NO contacts of the relay outputs required		not required
Cable length between sensor and electronic evaluation device with Cu 1.5 mm² and 150 nF/km maximum	m	1 000

		3SK1122-.AB..
Make time		
• with automatic start		
– typical	s	—
– for DC maximum	s	0.085
– for AC maximum	s	—
– after mains power cut		
– typical	s	6.5
– maximum	s	6.5
• with monitored start		
– typical	s	—
– maximum	s	0.085
Backslide delay time		
• after opening of the safety circuits typical	s	0.04
• at mains power cut		
– typical	s	0
– maximum	s	0
Adjustable backslide delay time		
• after opening of the safety circuits	s	— —
Recovery time		
• after opening of the safety circuits typical	s	0.03
• after mains power cut typical	s	6.5
Pulse duration		
• of the sensor input minimum	s	0.06
• of the ON pushbutton input minimum	s	0.15
• of the cascading-entrance minimum	s	—
Type of voltage of the controlled supply voltage		DC
Control supply voltage frequency		
• 1 rated value	Hz	—
• 2 rated value	Hz	—

		3SK1122-.AB..
Control supply voltage		
• for DC rated value	V	24
– minimum	V	—
– maximum	V	—
• at 50 Hz at AC rated value	V	—
– minimum	V	—
– maximum	V	—
• at 60 Hz at AC rated value	V	—
– minimum	V	—
– maximum	V	—
Operating range factor control supply voltage rated value of the magnet coil		
• at 50 Hz for AC		— —
• at 60 Hz for AC		— —
• for DC		0.8 1.2
Active power loss typical	W	2
Contact reliability of the auxiliary contacts		—
Product function parameterizable		Sensor floating / sensor non-floating, monitored start / autostart, 1-channel / 2-channel sensor connection, cross-circuit detection, startup testing, antivalent sensors, 2-hand switches
Suitability for use device connector 3ZY12		Yes
Suitability for interaction pressing control		No
Suitability for use		
• safety cut-out switch		Yes
• monitoring of floating sensors		Yes
• monitoring of non-floating sensors		Yes
• magnetically operated switches monitoring		Yes
• safety-related circuits		Yes

13.2.2.5 Technical data for 3SK1122 Advanced solid-state time-delayed basic unit

		3SK1122-.CB.1	3SK1122-.CB.2	3SK1122-.CB.4
Insulation voltage rated value	V	50		
Resistance against shock		10g / 11 ms		
Number of sensor inputs 1-channel or 2-channel		1		
Design of the cascading		yes		
Type of the safety-related wiring of the inputs		single-channel and two-channel		
Product feature transverse contact-secure		Yes		
Safety Integrity Level (SIL)				
• according to IEC 61508		SIL3		
• for delayed release circuit according to IEC 61508		SIL3		
Performance Level (PL)				
• according to ISO 13849-1		e		
• for delayed release circuit according to ISO 13849-1		e		
Category according to ISO 13849-1		4		
T1 value for proof test interval or service life according to IEC 61508	a	20		
Safety device type according to IEC 61508-2		Type B		

		3SK1122-.CB.1	3SK1122-.CB.2	3SK1122-.CB.4
Number of outputs				
• as contact-affected switching element				
– as NC contact for reporting function instantaneous switching		0		
– as NO contact for reporting function instantaneous switching		0		
– as NC contact for reporting function delayed switching		0		
– as NO contact for reporting function delayed switching		0		
– as NC contact safety-related instantaneous switching		0		
– as NO contact safety-related instantaneous switching		—		
– as NC contact safety-related delayed switching		0		
– as NO contact safety-related delayed switching		—		
• as contact-less semiconductor switching element				
– safety-related				
– delayed switching		2		
– non-delayed		2		
– for reporting function				
– delayed switching		—		
– non-delayed		0		
Stop category according to DIN EN 60204-1		0 / 1		
Design of the input				
• cascading-input/functional switching		Yes		
• feedback input		Yes		
• start input		Yes		
Design of the electrical connection jumper socket		No		
Operating cycles maximum	1/h	2 000		
Switching capacity current of the semiconductor outputs at DC-13 at 24 V	A	2		

		3SK1122-.CB.1	3SK1122-.CB.2	3SK1122-.CB.4
Switching capacity current of the NO contacts of the relay outputs				
• at DC-13				
– at 24 V	A	—		
– at 115 V	A	—		
– at 230 V	A	—		
• at AC-15				
– at 115 V	A	—		
– at 230 V	A	—		
Switching capacity current of the NC contacts of the relay outputs				
• at DC-13				
– at 24 V	A	—		
– at 115 V	A	—		
– at 230 V	A	—		
• at AC-15				
– at 115 V	A	—		
– at 230 V	A	—		
Thermal current of the contact-affected switching element maximum	A	—		
Total current maximum	A	—		
Mechanical operating cycles as operating time typical		—		
Max. permissible voltage for safe isolation between electronic evaluation device and enabling circuit according to EN 60947-1	V	—		
Design of the fuse link for short-circuit protection of the NO contacts of the relay outputs required		not required		
Cable length between sensor and electronic evaluation device with Cu 1.5 mm² and 150 nF/km maximum	m	1 000		

		3SK1122-.CB.1	3SK1122-.CB.2	3SK1122-.CB.4
Make time				
• with automatic start				
– typical	s	—		
– for DC maximum	s	0.085		
– for AC maximum	s	—		
– after mains power cut				
– typical	s	6.5		
– maximum	s	6.5		
• with monitored start				
– typical	s	—		
– maximum	s	0.085		
Backslide delay time				
• after opening of the safety circuits typical	s	0.04		
• at mains power cut				
– typical	s	0		
– maximum	s	0		
Adjustable backslide delay time				
• after opening of the safety circuits	s	0.05 3	0.5 30	5 300
Recovery time				
• after opening of the safety circuits typical	s	0.03		
• after mains power cut typical	s	6.5		
Pulse duration				
• of the sensor input minimum	s	0.06		
• of the ON pushbutton input minimum	s	0.15		
• of the cascading-entrance minimum	s	—		
Type of voltage of the controlled supply voltage		DC		
Control supply voltage frequency				
• 1 rated value	Hz	—		
• 2 rated value	Hz	—		

		3SK1122-.CB.1	3SK1122-.CB.2	3SK1122-.CB.4
Control supply voltage				
• for DC rated value	V	24		
– minimum	V	—		
– maximum	V	—		
• at 50 Hz at AC rated value	V	—		
– minimum	V	—		
– maximum	V	—		
• at 60 Hz at AC rated value	V	—		
– minimum	V	—		
– maximum	V	—		
Operating range factor control supply voltage rated value of the magnet coil				
• at 50 Hz for AC		— —		
• at 60 Hz for AC		— —		
• for DC		0.8 1.2		
Active power loss typical	W	2		
Contact reliability of the auxiliary contacts		—		
Product function parameterizable		Sensor floating / sensor non-floating, monitored start / autostart, 1-channel / 2-channel sensor connection, cross-circuit detection, startup testing, antivalent sensors, 2-hand switches, time delay		
Suitability for use device connector 3ZY12		Yes		
Suitability for interaction pressing control		No		
Suitability for use				
• safety cut-out switch		Yes		
• monitoring of floating sensors		Yes		
• monitoring of non-floating sensors		Yes		
• magnetically operated switches monitoring		Yes		
• safety-related circuits		Yes		

13.3 Expansion modules

13.3.1 Output expansions

13.3.1.1 Technical data for output expansion 3SK1211

		3SK1211-.BB0.	3SK1211-.BB4.	3SK1211-.BW2.
Insulation voltage rated value	V	300		
Resistance against shock		10g / 11 ms		
Number of sensor inputs 1-channel or 2-channel		—		
Type of the safety-related wiring of the inputs		—		
Product feature transverse contact-secure		—		
Safety Integrity Level (SIL) according to IEC 61508		SIL3		
SIL claim limit (for a subsystem) according to EN 62061		3		
Performance level (PL) according to ISO 13849-1		e		
Category according to ISO 13849-1		4		
T1 value for proof test interval or service life according to IEC 61508	a	20		
Safety device type according to IEC 61508-2		Type A		

		3SK1211-.BB0.	3SK1211-.BB4.	3SK1211-.BW2.
Number of outputs as contact-affected switching element				
• as NC contact for reporting function instantaneous switching		0		
• as NO contact for reporting function instantaneous switching		0		
• as NC contact for reporting function delayed switching		0		
• as NO contact for reporting function delayed switching		0		
• as NC contact safety-related instantaneous switching		0		
• as NO contact safety-related instantaneous switching		4		
• as NC contact safety-related delayed switching		0		
• as NO contact safety-related delayed switching		0		
Stop category according to DIN EN 60204-1		0		
Design of the input start input		—		
Design of the electrical connection jumper socket		No		
Operating cycles maximum	1/h	360		

		3SK1211-.BB0.	3SK1211-.BB4.	3SK1211-.BW2.
Switching capacity current				
• of the NO contacts of the relay outputs				
– at DC-13				
– at 24 V	A	5		
– at 115 V	A	0.2		
– at 230 V	A	0.1		
– at AC-15				
– at 115 V	A	4		
– at 230 V	A	4		
• of the NC contacts of the relay outputs				
– at DC-13				
– at 24 V	A	—		
– at 115 V	A	—		
– at 230 V	A	—		
– at AC-15				
– at 115 V	A	—		
– at 230 V	A	—		
Thermal current of the contact-affected switching element maximum	A	5		
Total current maximum	A	12		
Mechanical operating cycles as operating time typical		10 000 000		
Max. permissible voltage for safe isolation between electronic evaluation device and enabling circuit according to EN 60947-1	V	—		
Design of the fuse link for short-circuit protection of the NO contacts of the relay outputs required		gL/gG: 6A or circuit breaker type A: 3A or circuit breaker type B: 2A or circuit breaker type C: 1A		
Cable length between sensor and electronic evaluation device with Cu 1.5 mm² and 150 nF/km maximum	m	—		

		3SK1211-.BB0.	3SK1211-.BB4.	3SK1211-.BW2.
Make time				
• with automatic start				
– typical	s	0.025	0.015	0.035
– for DC maximum	s	—	0.03	—
– for AC maximum	s	0.04	—	0.035
– after mains power cut				
– typical	s	0.025	0.015	0.035
– maximum	s	0.04	0.03	0.035
• with monitored start				
– maximum	s	—		
– typical	s	—		
Backslide delay time				
• after opening of the safety circuits typical	s	—		
• at mains power cut				
– typical	s	0.045	0.01	0.2
– maximum	s	0.05	0.015	0.3
Adjustable backslide delay time after opening of the safety circuits				
• initial value	s	—		
• final value	s	—		
Recovery time				
• after opening of the safety circuits typical	s	—		
• after mains power cut typical	s	0.06	0.015	0.32
Pulse duration				
• of the sensor input minimum	s	—		
• of the ON pushbutton input minimum	s	—		
• of the cascading-entrance minimum	s	—		
Type of voltage of the controlled supply voltage		AC	DC	AC/DC
Control supply voltage frequency				
• 1 rated value	Hz	50	—	50
• 2 rated value	Hz	60	—	60

		3SK1211-.BB0.	3SK1211-.BB4.	3SK1211-.BW2.
Control supply voltage				
• for DC rated value	V	—	24	—
– minimum	V	—		110
– maximum	V	—		240
• at 50 Hz at AC rated value	V	24	—	
– minimum	V	—		110
– maximum	V	—		240
• at 60 Hz at AC rated value	V	24	—	
– minimum	V	—		110
– maximum	V	—		240
Operating range factor control supply voltage rated value of the magnet coil				
• at 50 Hz for AC		0.85	—	0.85
		1.1	—	1.1
• at 60 Hz for AC		0.85	—	0.85
		1.1	—	1.1
• for DC		—	0.8	0.85
		—	1.2	1.1
Active power loss typical	W	2.5		2
Contact reliability of the auxiliary contacts		—		
Product function parameterizable		—	undelayed/delayed (only with system connector)	—
Suitability for interaction pressing control		—		
Suitability for use device connector 3ZY12		No	Yes	No
Suitability for use				
• monitoring of floating sensors		—		
• monitoring of non-floating sensors		—		
• safety cut-out switch		—		
• magnetically operated switches monitoring		—		
• safety-related circuits		Yes		

13.3.1.2 Technical data for output expansion 3SK1213

		3SK1213-.AB..	3SK1213-.AJ..	3SK1213-.AL..
Insulation voltage rated value	V	300		
Resistance against shock		5 g / 10 ms		
Number of sensor inputs 1-channel or 2-channel		—		
Type of the safety-related wiring of the inputs		—		
Product feature transverse contact-secure		—		
Safety Integrity Level (SIL) according to IEC 61508		SIL3		
SIL claim limit (for a subsystem) according to EN 62061		3		
Performance level (PL) according to ISO 13849-1		e		
Category according to ISO 13849-1		4		
T1 value for proof test interval or service life according to IEC 61508	a	20		
Safety device type according to IEC 61508-2		Type A		
Number of outputs as contact-affected switching element				
• as NC contact for reporting function instantaneous switching		0		
• as NO contact for reporting function instantaneous switching		0		
• as NC contact for reporting function delayed switching		0		
• as NO contact for reporting function delayed switching		0		
• as NC contact safety-related instantaneous switching		0		
• as NO contact safety-related instantaneous switching		3		
• as NC contact safety-related delayed switching		0		
• as NO contact safety-related delayed switching		0		
Stop category according to DIN EN 60204-1		0		
Design of the input start input		—		
Design of the electrical connection jumper socket		No		

		3SK1213-.AB..	3SK1213-.AJ..	3SK1213-.AL..
Operating cycles maximum	1/h	360		
Switching capacity current				
• of the NO contacts of the relay outputs				
– at DC-13				
– at 24 V	A	6		
– at 115 V	A	1.1		
– at 230 V	A	0.55		
– at AC-15				
– at 115 V	A	10		
– at 230 V	A	10		
• of the NC contacts of the relay outputs				
– at DC-13				
– at 24 V	A	—		
– at 115 V	A	—		
– at 230 V	A	—		
– at AC-15				
– at 115 V	A	—		
– at 230 V	A	—		
Thermal current of the contact-affected switching element maximum	A	10		
Total current maximum	A	—		
Mechanical operating cycles as operating time typical		10 000 000		
Max. permissible voltage for safe isolation between electronic evaluation device and enabling circuit according to EN 60947-1	V	300		
Design of the fuse link for short-circuit protection of the NO contacts of the relay outputs required		gL/gG: 16 A or MCB type A: 6 A or MCB type B: 4 A or MCB type C: 4 A		
Cable length between sensor and electronic evaluation device with Cu 1.5 mm² and 150 nF/km maximum	m	—		

		3SK1213-.AB..	3SK1213-.AJ..	3SK1213-.AL..
Make time				
• with automatic start				
– typical	s	0.05	0.01	
– for DC maximum	s	0.07	—	
– for AC maximum	s	—	0.015	
– after mains power cut				
– typical	s	0.05	0.01	
– maximum	s	0.07	0.015	
• with monitored start				
– maximum	s	—		
– typical	s	—		
Backslide delay time				
• after opening of the safety circuits typical	s	—		
• at mains power cut				
– typical	ms	20	15	
– maximum	ms	20	15	
Adjustable backslide delay time after opening of the safety circuits				
• initial value	s	—		
• final value	s	—		
Recovery time				
• after opening of the safety circuits typical	s	—		
• after mains power cut typical	s	0		
Pulse duration				
• of the sensor input minimum	s	—		
• of the ON pushbutton input minimum	s	—		
• of the cascading-entrance minimum	s	—		
Type of voltage of the controlled supply voltage		DC	AC	
Control supply voltage frequency				
• 1 rated value	Hz	—	50	
• 2 rated value	Hz	—	60	

		3SK1213-.AB..	3SK1213-.AJ..	3SK1213-.AL..
Control supply voltage				
• for DC rated value	V	24	—	
– minimum	V	—		
– maximum	V	—		
• at 50 Hz at AC rated value	V	—	115	230
– minimum	V	—		
– maximum	V	—		
• at 60 Hz at AC rated value	V	—	115	230
– minimum	V	—		
– maximum	V	—		
Operating range factor control supply voltage rated value of the magnet coil				
• at 50 Hz for AC		—	0.85	
		—	1.1	
• at 60 Hz for AC		—	0.85	
		—	1.1	
• for DC		0.8	—	
		1.2	—	
Active power loss typical	W	5.5	4	3.5
Contact reliability of the auxiliary contacts		—		
Product function parameterizable		undelayed/delayed (only with system connector)	—	
Suitability for interaction pressing control		—		
Suitability for use device connector 3ZY12		Yes	No	
Suitability for use				
• monitoring of floating sensors		—		
• monitoring of non-floating sensors		—		
• safety cut-out switch		—		
• magnetically operated switches monitoring		—		
• safety-related circuits		Yes		

13.3.2 Input expansions

13.3.2.1 Technical data for input expansion 3SK1220

		3SK1220-.....
Insulation voltage rated value	V	50
Resistance against shock		10g / 11 ms
Number of sensor inputs 1-channel or 2-channel		1
Type of the safety-related wiring of the inputs		single-channel and two-channel
Product feature transverse contact-secure		Yes
Safety Integrity Level (SIL) according to IEC 61508		SIL3
SIL claim limit (for a subsystem) according to EN 62061		3
Performance level (PL) according to ISO 13849-1		e
Category according to ISO 13849-1		4
T1 value for proof test interval or service life according to IEC 61508	a	20
Safety device type according to IEC 61508-2		Type B
Number of outputs as contact-affected switching element		
• as NC contact for reporting function instantaneous switching		0
• as NO contact for reporting function instantaneous switching		0
• as NC contact for reporting function delayed switching		0
• as NO contact for reporting function delayed switching		0
• as NC contact safety-related instantaneous switching		0
• as NO contact safety-related instantaneous switching		0
• as NC contact safety-related delayed switching		0
• as NO contact safety-related delayed switching		0
Stop category according to DIN EN 60204-1		0
Design of the input start input		Yes
Design of the electrical connection jumper socket		No
Operating cycles maximum	1/h	—

		3SK1220-.....
Switching capacity current		
• of the NO contacts of the relay outputs		
– at DC-13		
– at 24 V	A	—
– at 115 V	A	—
– at 230 V	A	—
– at AC-15		
– at 115 V	A	—
– at 230 V	A	—
• of the NC contacts of the relay outputs		
– at DC-13		
– at 24 V	A	—
– at 115 V	A	—
– at 230 V	A	—
– at AC-15		
– at 115 V	A	—
– at 230 V	A	—
Thermal current of the contact-affected switching element maximum	A	—
Total current maximum	A	—
Mechanical operating cycles as operating time typical		—
Max. permissible voltage for safe isolation between electronic evaluation device and enabling circuit according to EN 60947-1	V	—
Design of the fuse link for short-circuit protection of the NO contacts of the relay outputs required		—
Cable length between sensor and electronic evaluation device with Cu 1.5 mm² and 150 nF/km maximum	m	1 000
Make time		
• with automatic start		
– typical	s	0.06
– for DC maximum	s	0.06
– for AC maximum	s	—
– after mains power cut		
– typical	s	6.5
– maximum	s	6.5
• with monitored start		
– maximum	s	0.06
– typical	s	0.06

		3SK1220-.....
Backslide delay time		
• after opening of the safety circuits typical	s	0.04
• at mains power cut		
– typical	s	—
– maximum	s	—
Adjustable backslide delay time after opening of the safety circuits		
• initial value	s	—
• final value	s	—
Recovery time		
• after opening of the safety circuits typical	s	0.03
• after mains power cut typical	s	—
Pulse duration		
• of the sensor input minimum	s	0.06
• of the ON pushbutton input minimum	s	0.15
• of the cascading-entrance minimum	s	—
Type of voltage of the controlled supply voltage		DC
Control supply voltage frequency		
• 1 rated value	Hz	—
• 2 rated value	Hz	—
Control supply voltage		
• for DC rated value	V	24
– minimum	V	—
– maximum	V	—
• at 50 Hz at AC rated value	V	—
– minimum	V	—
– maximum	V	—
• at 60 Hz at AC rated value	V	—
– minimum	V	—
– maximum	V	—
Operating range factor control supply voltage rated value of the magnet coil		
• at 50 Hz for AC		—
		—
• at 60 Hz for AC		—
		—
• for DC		0.8
		1.2
Active power loss typical	W	1.2

	3SK1220-.....
Contact reliability of the auxiliary contacts	—
Product function parameterizable	Sensor floating / sensor non-floating, monitored start / autostart, 1-channel / 2-channel sensor connection, cross-circuit detection, startup testing, antivalent sensors, 2-hand switches
Suitability for interaction pressing control	No
Suitability for use device connector 3ZY12	Yes
Suitability for use	
• monitoring of floating sensors	Yes
• monitoring of non-floating sensors	Yes
• safety cut-out switch	Yes
• magnetically operated switches monitoring	Yes
• safety-related circuits	Yes

13.3.2.2 Technical data for power supply unit 3SK1230

Bestell-Nr.		3SK1230-1AW20	3SK1230-2AW20
Type of current supply		24 V / 0,6 A	
Type of display for normal operation		Green LED for 24 V OK	
Overvoltage class		Installation category III	
Characteristic feature of the output short-circuit protected		Yes	
Product feature Bridging of channels		No	
Output voltage for DC nominal value	V	24	
Output current nominal range ultimate value	A	0.6	
Resistive loss	W	17	
Design of the short-circuit protection		automatically start-up	
Operating range factor control supply voltage rated value			
• at 50 Hz for AC			
– initial value		0.85	
– final value		1.1	
• at 60 Hz for AC			
– initial value		0.85	
– final value		1.1	
• for DC			
– initial value		0.85	
– final value		1.1	
Control supply voltage			
• at 50 Hz at AC rated value			
– maximum	V	240	
– minimum	V	110	
• at 60 Hz at AC rated value			
– maximum	V	240	
– minimum	V	110	
• for DC rated value			
– maximum	V	240	
– minimum	V	110	
Resistance against shock		10g / 11 ms	
Verification of suitability			
• TÜV (German technical inspectorate) certificate		No	
• UL-registration		Yes	

Dimension drawings

14

14.1 Dimension drawings for 3SK1 devices

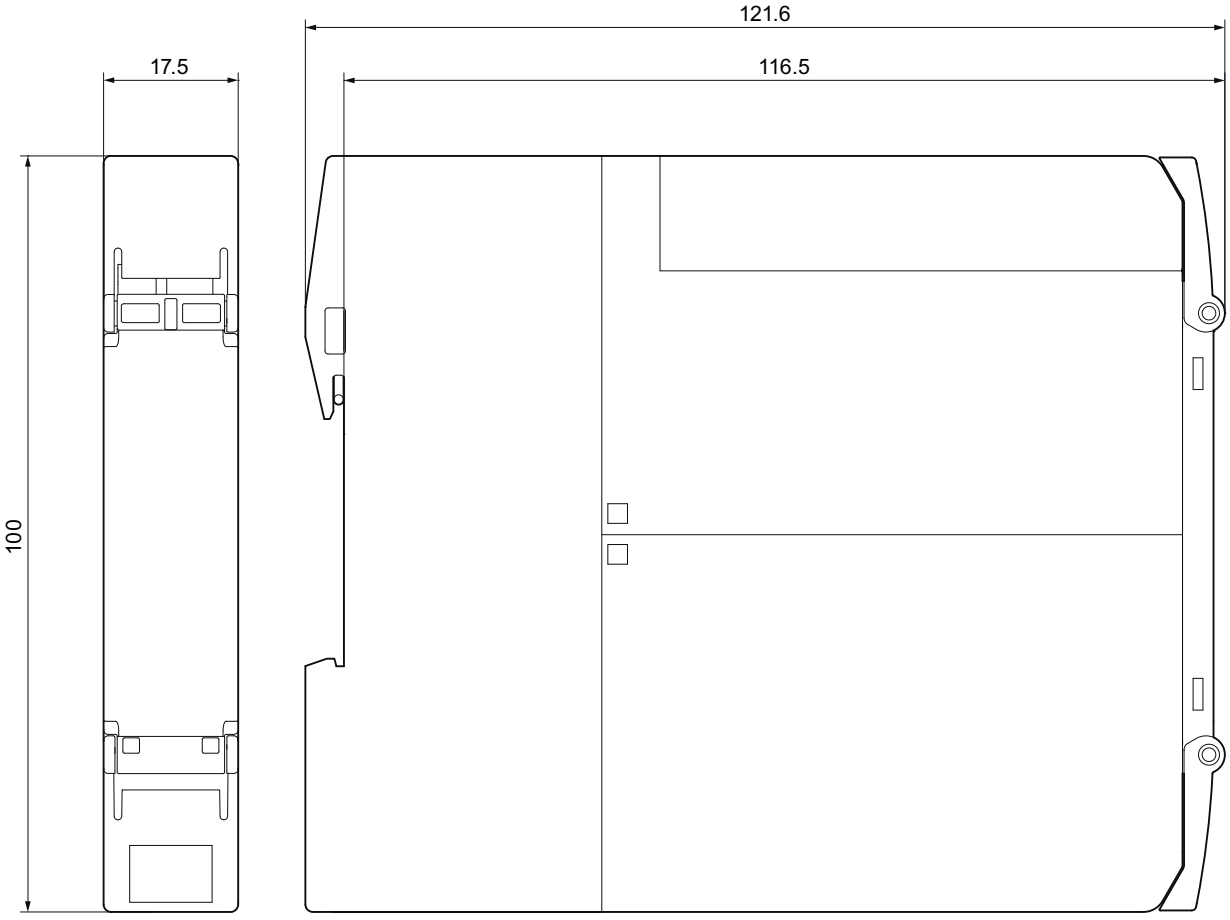

Figure 14-1 Enclosure 17.5 mm for safety relays:
3SK1120-….. ; 3SK1220-…..

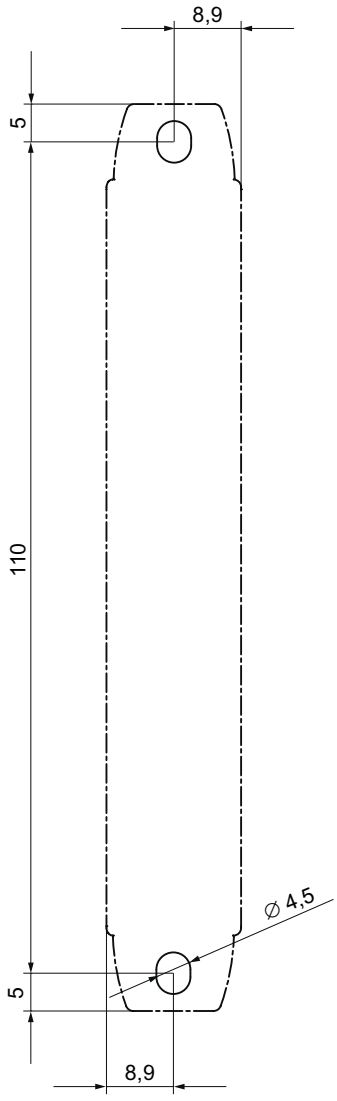

Figure 14-2 Drilling diagram, enclosure 17.5 mm

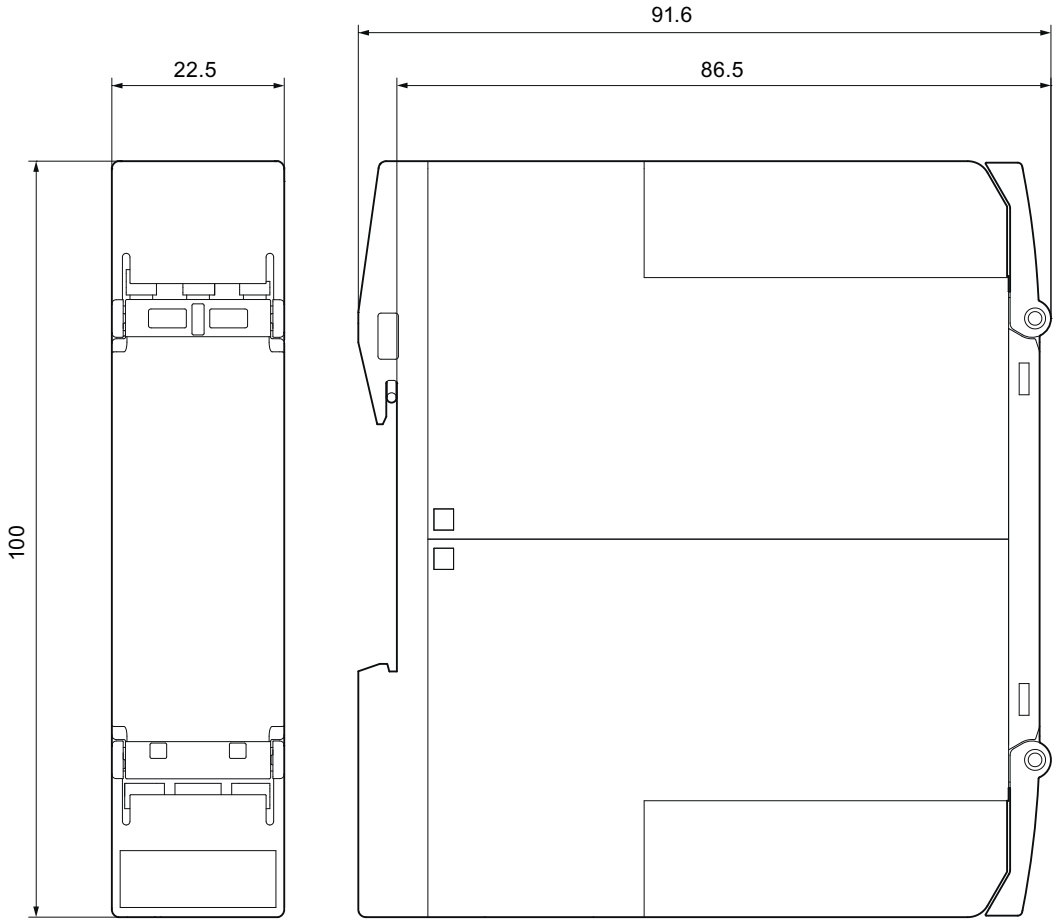

Figure 14-3 Enclosure 22.5 mm (short) for safety relays: 3SK1112-…..

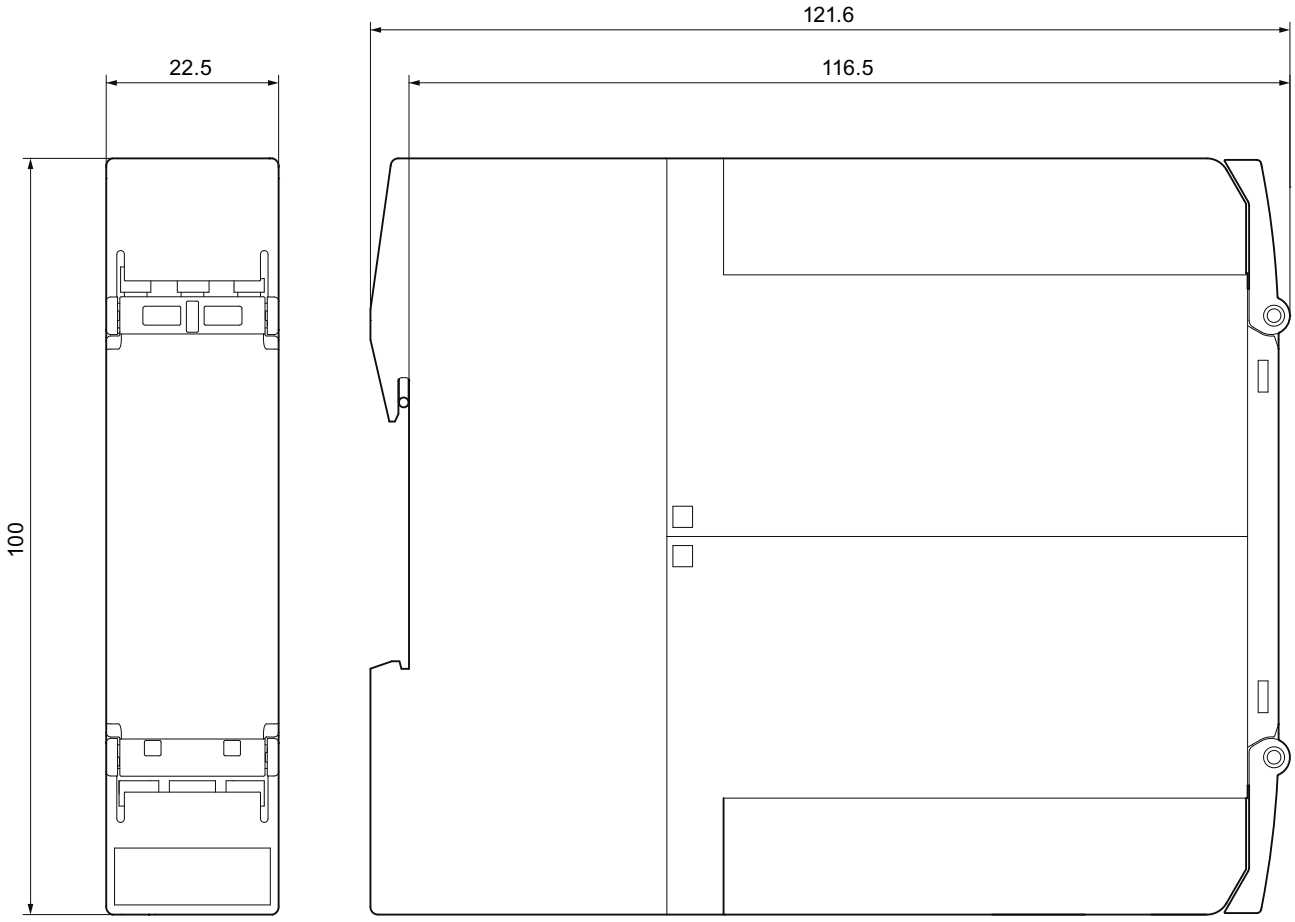

Figure 14-4 Enclosure 22.5 mm (long) for safety relays:
3SK1111-….. ; 3SK1121-….. ; 3SK1122-….. ; 3SK1211-….. ; 3SK1230-…..

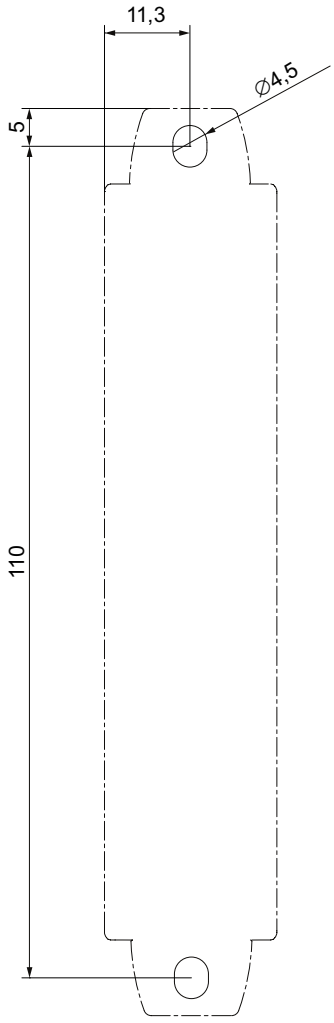

Figure 14-5 Drilling diagram, enclosure 22.5 mm

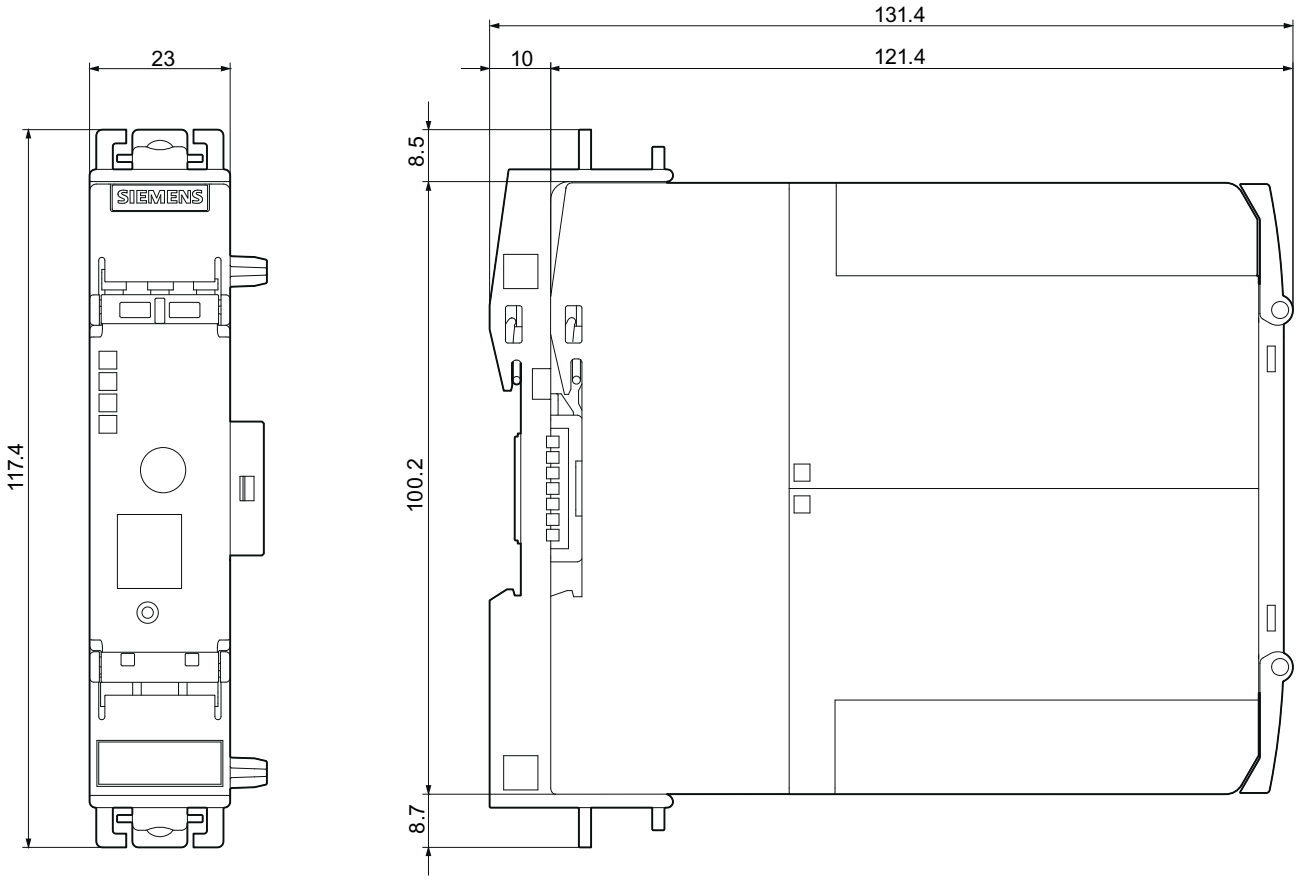

Figure 14-6 Dimension drawing 3SK1 device on device connector

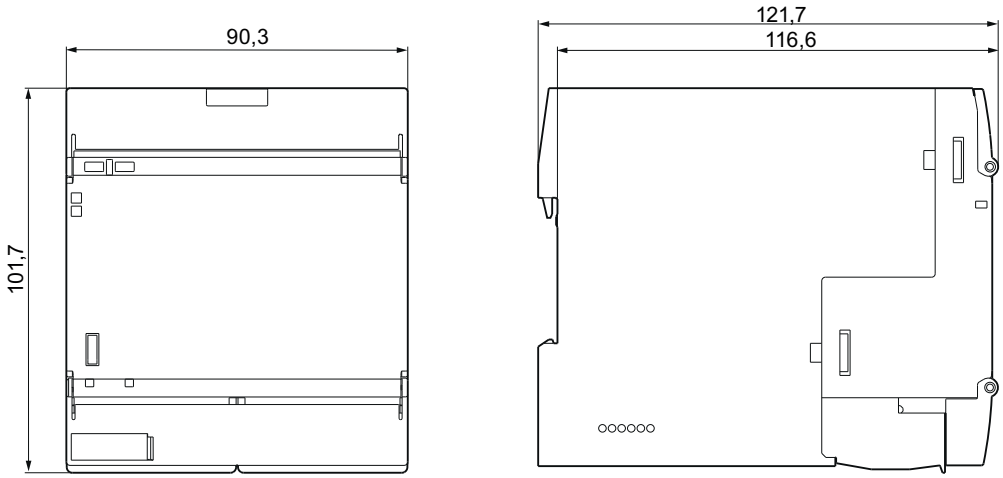

Figure 14-7 Enclosure 90 mm for safety relays: 3SK1213-…..

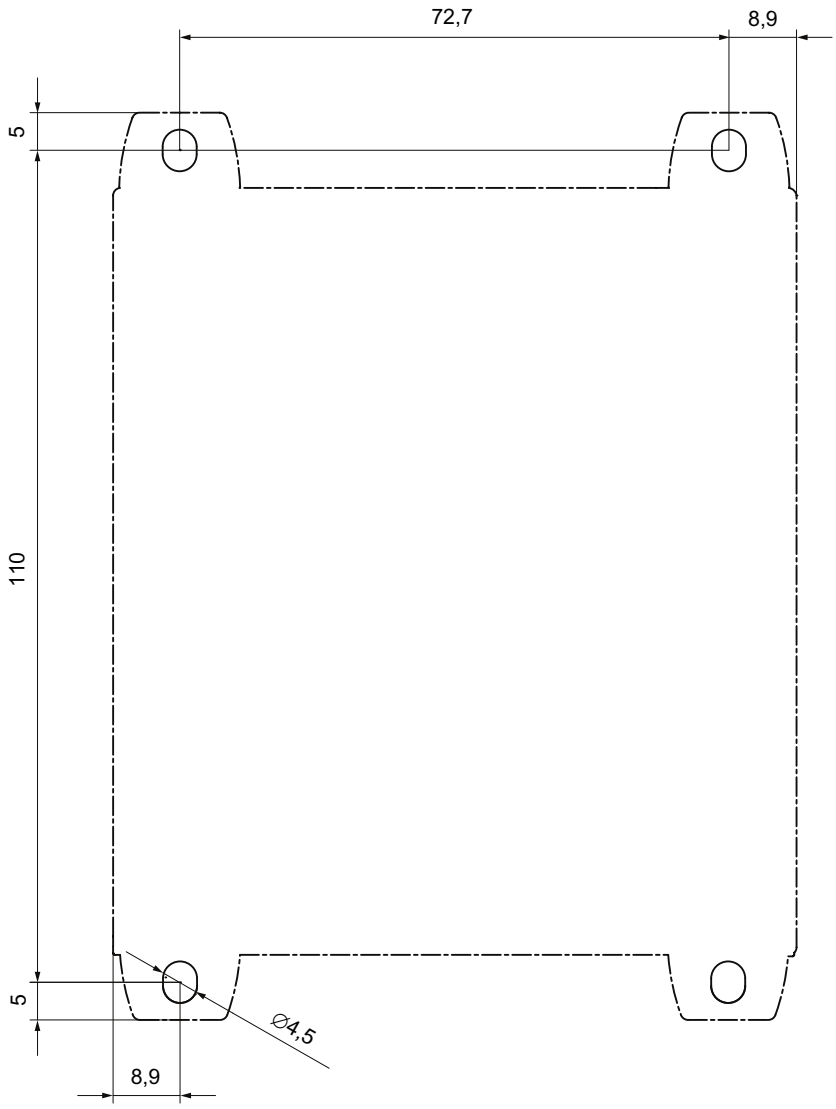

Figure 14-8 Drilling diagram, enclosure 90 mm

14.2 Dimension drawings for 3SK1 device connector

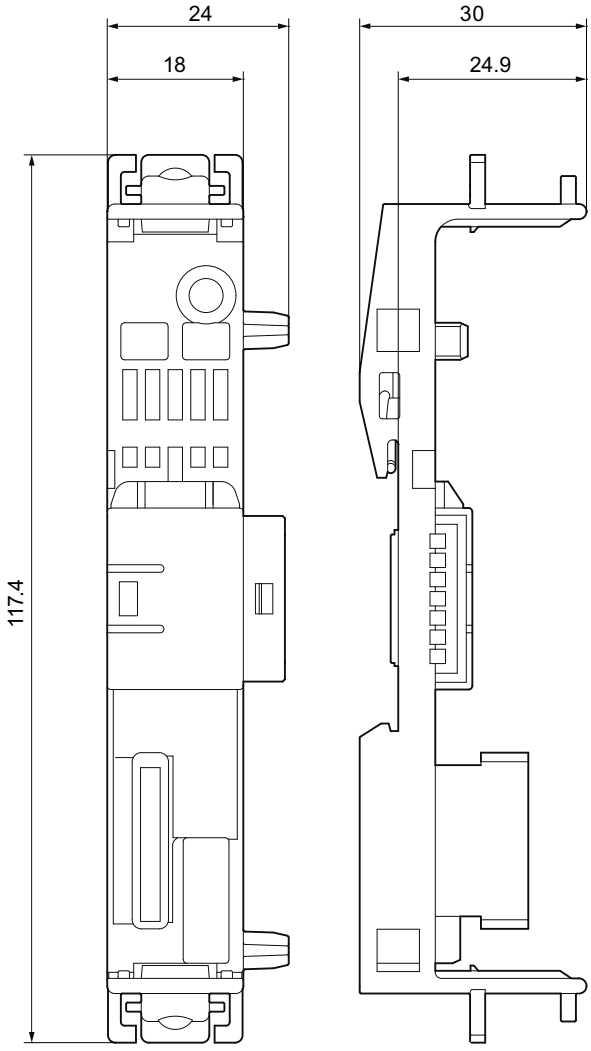

Figure 14-9 Device connector 17.5 mm

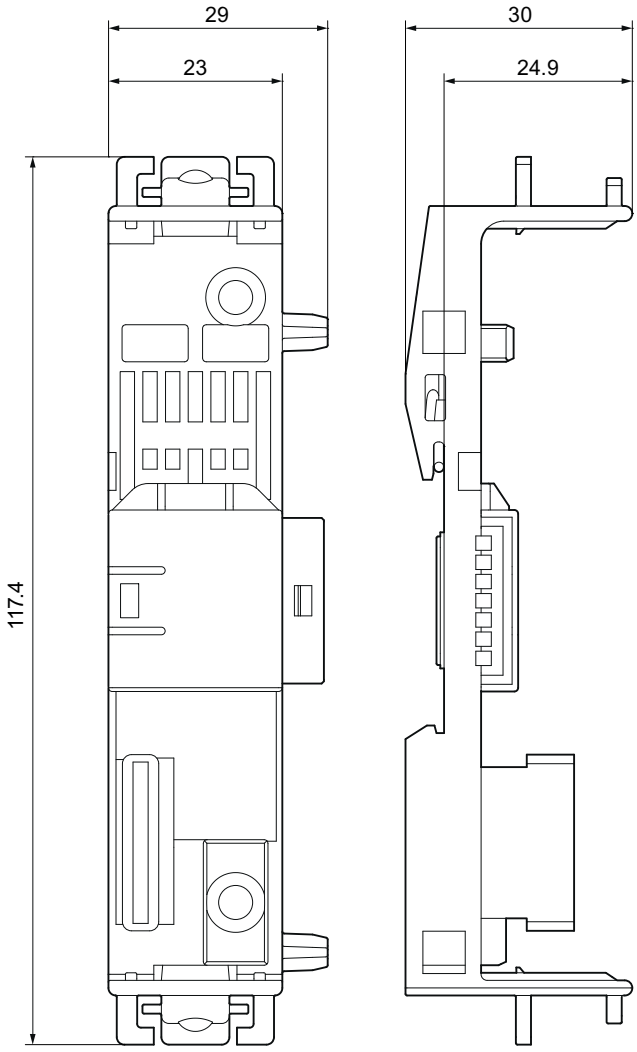

Figure 14-10 Device connector, type 1, 22.5 mm

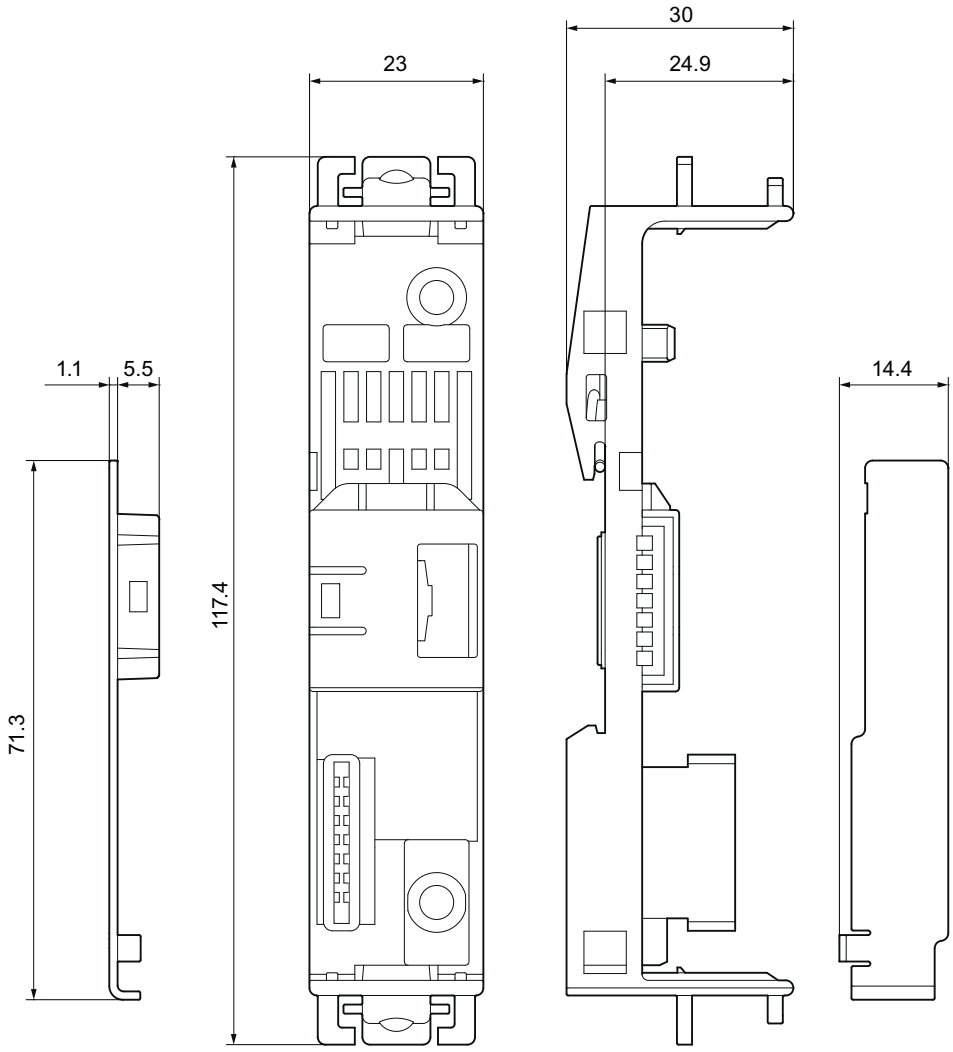

Figure 14-11 Device termination connector, type 1, 22.5 mm

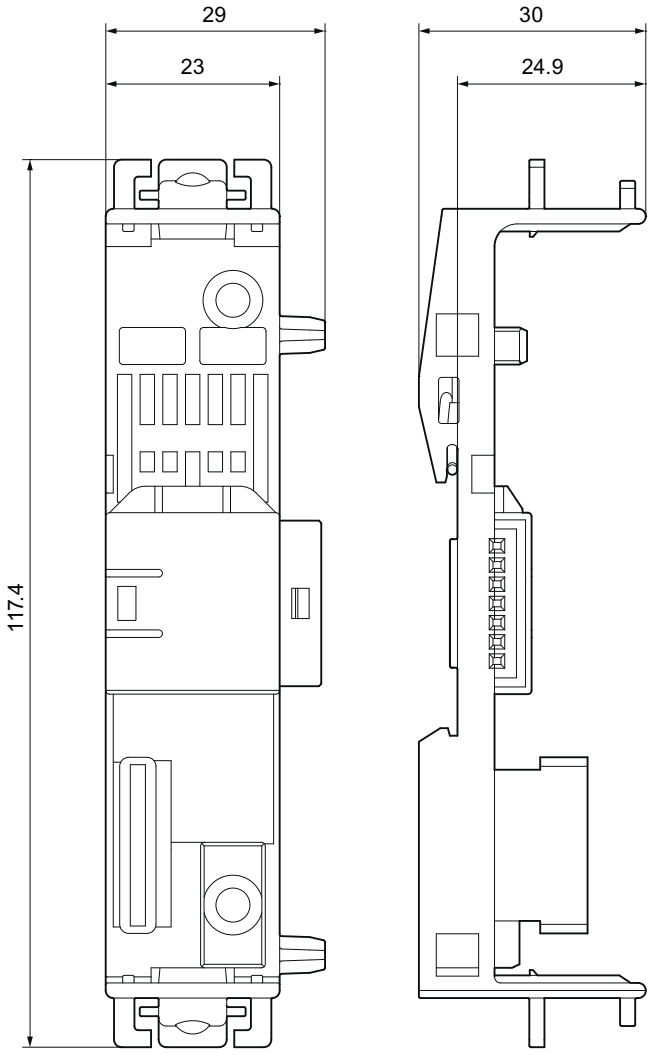

Figure 14-12 Device connector, type 2, 22.5 mm

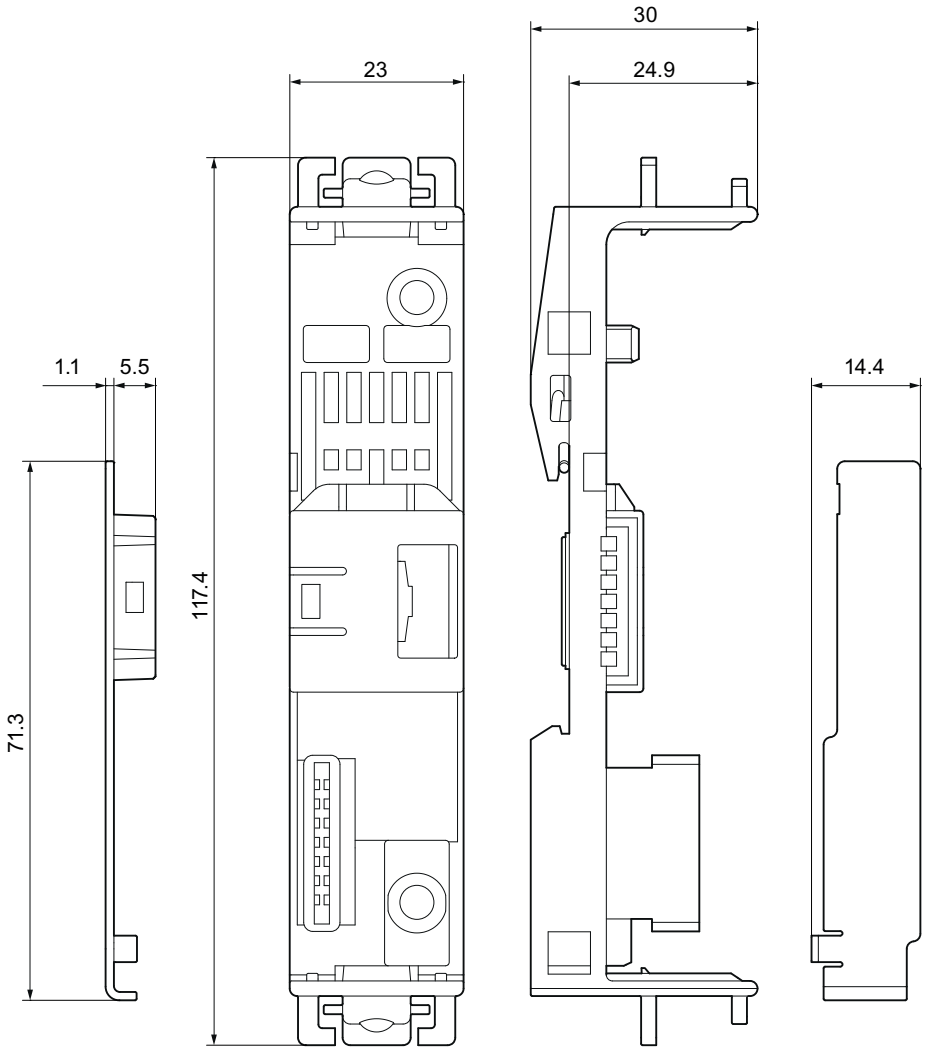

Figure 14-13 Device termination connector, type 2, 22.5 mm

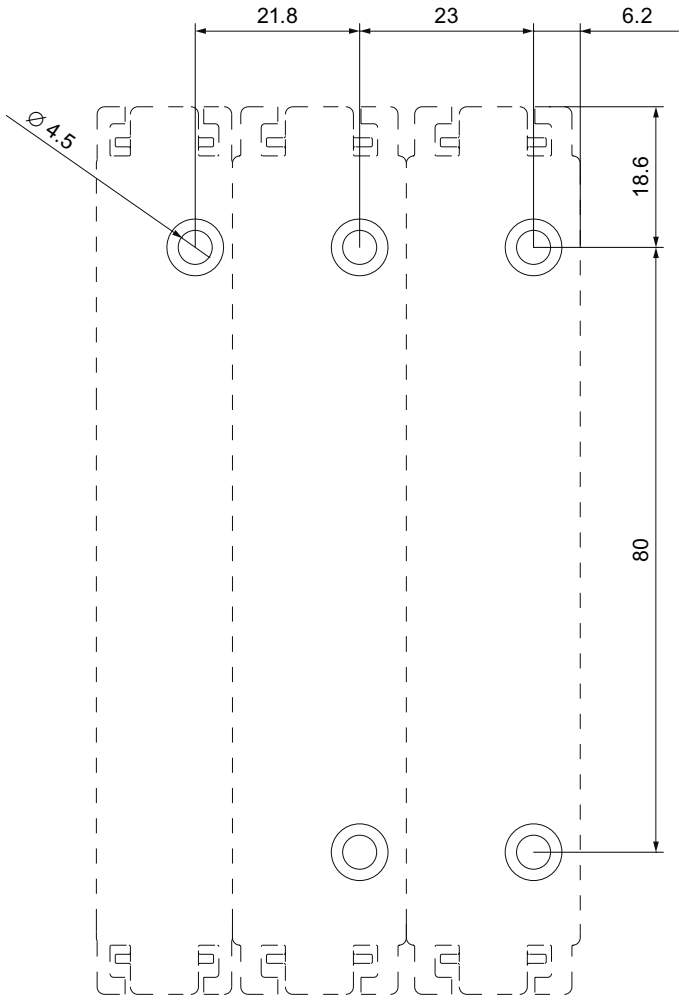

Figure 14-14 Drilling plan for 17.5 mm and 22.5 mm device connectors

Accessories

15

The following accessories are available for the 3SK1 devices.

Designation	MLFB
SIRIUS terminal, 2-pole, screw-type, 1 x 2.5 mm²	3ZY1121-1BA00
SIRIUS terminal, 3-pole, screw-type, 1 x 2.5 mm²	3ZY1131-1BA00
SIRIUS terminal, 2-pole, push-in, 1 x 2.5 mm²	3ZY1121-2BA00
SIRIUS terminal, 3-pole, push-in, 1 x 2.5 mm²	3ZY1131-2BA00
SIRIUS device connector, type 1, 17.5 mm	3ZY1212-1BA00
SIRIUS device connector, type 1, 22.5 mm	3ZY1212-2BA00
SIRIUS device termination connector, type 1, 22.5 mm	3ZY1212-2DA00
SIRIUS device connector, type 2, 22.5 mm	3ZY1212-2EA00
SIRIUS device termination connector, type 2, 22.5 mm	3ZY1212-2FA00
SIRIUS device termination connector, type 2, set for enclosures of 45 mm upwards	3ZY1212-0FA01
SIRIUS push-in lugs for wall mounting (contents: 12 units)	3ZY1311-0AA00
SIRIUS sealable cover 17.5 mm	3ZY1321-1AA00
SIRIUS sealable cover 22.5 mm	3ZY1321-2AA00
Coding pins for SIRIUS terminals	3ZY1440-1AA00
Sealable membrane 22.5 mm 1 pack = 12 membranes	3TK2820-0AA00
SIRIUS device identification label 17 sheets of 48 labels; large 10 x 7 mm	3RT2900-1SB10
SIRIUS device identification label 17 sheets of 20 labels; large 20 x 7 mm	3RT2900-1SB20
SIRIUS device identification label 10 sheets of 306 adhesive labels; large 19 x 6 mm	3RT2900-1SB60

Appendix A

A.1 Correction sheet

Have you noticed any errors while reading this manual? If so, please use this form to tell us about them. We welcome comments and suggestions for improvement.

Fax response

	From (please complete):
To	Name
SIEMENS AG	
I IA CE MK&ST 3	Company/Department
92220 Amberg / Germany	Address

Fax: +49 (0)9621-80-3337

Manual title:

Table A- 1 Errors, comments, and suggestions for improvements

Service & Support

Download catalogs and information material:
www.siemens.com/sirius/infomaterial

Newsletter - always up to date:
www.siemens.com/sirius/newsletter

E-Business in the Industry Mall:
www.siemens.com/sirius/mall

Online-Support:
www.siemens.com/sirius/support

Contact for all technical information:
Technical Assistance
Tel.: +49 (911) 895-5900
e-mail: technical-assistance@siemens.com
www.siemens.com/sirius/technical-assistance

Siemens AG
Industry Sector
Postfach 23 55
90713 FUERTH
GERMANY

Subject to change without prior notice
Order No.: 3ZX1012-0SK11-0AC0

© Siemens AG 2013

Industrial
Controls
SIRIUS

www.siemens.com/automation