Extract from the online catalog

MCV 1,5/ 9-G-3,5

Order No.: 1843677

The figure shows a 10-position version of the product

http://eshop.phoenixcontact.de/phoenix/treeViewClick.do?UID=1843677

Header, Nominal current: 8 A, Nom. voltage: 160 V, Pitch: 3.5 mm, Number of positions: 9, Assembly: Soldering

Commercial data	
EAN	4017918112820
Pack	50 pcs.
Customs tariff	85366990
Weight/Piece	0.00249 KG
Catalog page information	Page 175 (CC-2009)

Product notes

WEEE/RoHS-compliant since: 01/01/2003

http://www.download.phoenixcontact.com Please note that the data given here has been taken from the online catalog. For comprehensive information and data, please refer to the user documentation. The General Terms and Conditions of Use apply to Internet downloads.

Technical data

Dimensions / positions	
Length	7.25 mm
Pitch	3.5 mm
Dimension a	28 mm
Number of positions	9
Pin dimensions	0,8 x 0,8 mm

Hole diameter	1.2 mm

Technical data

Insulating material group	IIIa
Rated surge voltage (III/3)	2.5 kV
Rated surge voltage (III/2)	2.5 kV
Rated surge voltage (II/2)	2.5 kV
Rated voltage (III/2)	160 V
Rated voltage (II/2)	250 V
Connection in acc. with standard	EN-VDE
Nominal current I_N	8 A
Nominal voltage U_N	160 V
Maximum load current	8 A
Insulating material	PBT
Inflammability class acc. to UL 94	V0

Certificates / Approvals

Certification	CB, CSA, CUL, GOST, UL, VDE-PZI

CSA

Nominal voltage U_N	300 V
Nominal current I_N	8 A

CUL

Nominal voltage U_N	300 V
Nominal current I_N	8 A

UL

Nominal voltage U_N	300 V
Nominal current I_N	8 A

Accessories

Item	Designation	Description
Marking		
1051993	B-STIFT	Marker pen, for manual labeling of unprinted Zack strips, smear-proof and waterproof, line thickness 0.5 mm
0804073	SK 3,5/2,8:FORTL.ZAHLEN	Marker card, printed horizontally, self-adhesive, 10-section marker strip, 14 identical decades marked 1-10, 11-20 etc. up to 91-100, sufficient for 140 terminal blocks
0803883	SK U/2,8 WH:UNBEDRUCKT	Unprinted marker cards, DIN A4 format, pitch as desired, self-adhesive, with 50 stamped marker strips, 185 mm strip length, can be labeled with the CMS system or manually with the M-PEN
Plug/Adapter		
1734634	CP-MSTB	Keying profile, is inserted into the slot on the plug or inverted header, red insulating material

Additional products

Item	Designation	Description
General		
1840434	MC 1,5/ 9-ST-3,5	Plug component, Nominal current: 8 A, Nom. voltage: 160 V, Pitch: 3.5 mm, Number of positions: 9, Connection type: Screw connection, Color: green
1863220	MCVR 1,5/ 9-ST-3,5	Plug component, Nominal current: 8 A, Nom. voltage: 160 V, Pitch: 3.5 mm, Number of positions: 9, Connection type: Screw connection, Color: green
1862920	MCVW 1,5/ 9-ST-3,5	Plug component, Nominal current: 8 A, Nom. voltage: 160 V, Pitch: 3.5 mm, Number of positions: 9, Connection type: Screw connection, Color: green

Diagrams/Drawings

Drilling plan/solder pad geometry

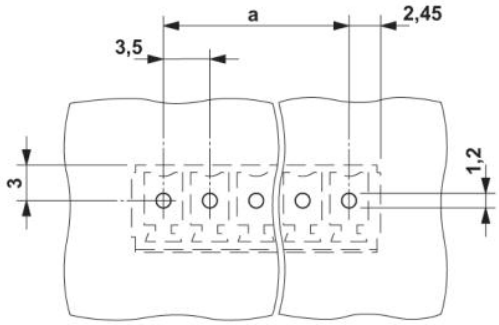

Dimensioned drawing

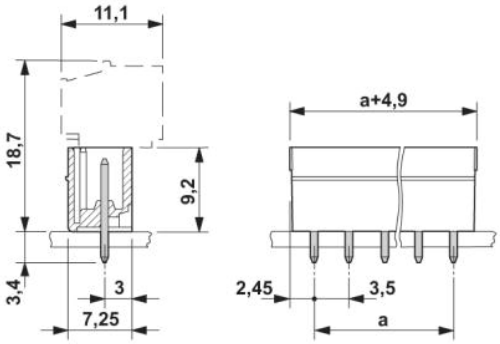

Address

PHOENIX CONTACT Inc., USA
586 Fulling Mill Road
Middletown, PA 17057,USA
Phone (800) 888-7388
Fax (717) 944-1625
http://www.phoenixcon.com

© 2010 Phoenix Contact
Technical modifications reserved;