THIS DRAWING IS UNPUBLISHED.
VERTRAULICHE UNVEROEFFENTLICHTE ZEICHNUNG

RELEASED FOR PUBLICATION ,1997
FREI FUER VEROEFFENTLICHUNG

© COPYRIGHT 1997 BY AMP INCORPORATED. ALL RIGHTS RESERVED.
ALLE RECHTE VORBEHALTEN

MATED WITH:
PASSEND ZU:
HA10

LOC	DIST
AI	

PROJEKT NR.: –

REVISIONS
AENDERUNGEN

P	LTR	DESCRIPTION BESCHREIBUNG	DATE	DWN	APVD
	D1	Change Tyco electronics logo to new TE format ECR-07-021078	25.10.2005	SR	ST

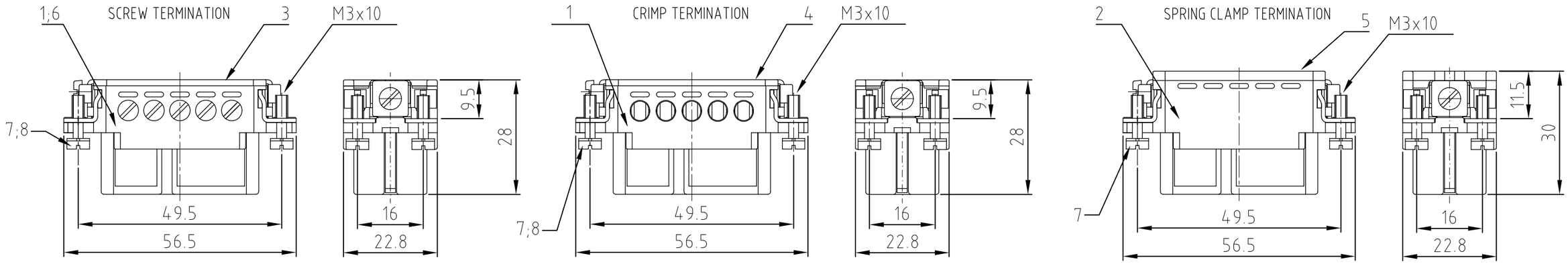

Contact arrangement / view from termination side

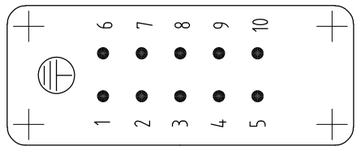

Assembling instruction

⚠8 DISTANCE FOR SAFETY
CONTACT MARKING MAX. 24 mm

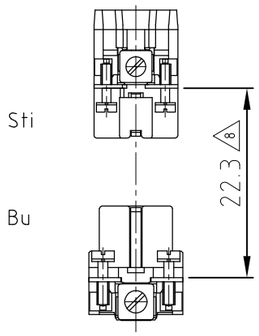

Panel cut-out for contact insert
when used without housing

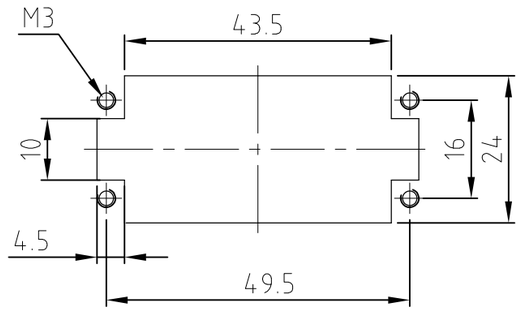

NOTES

1 SUITABLE CRIMP CONTACTS: SERIES HE/HA
OUTER DIMENSIONS OF INSULATION: MAX. Ø3,2 MM

2 SUITABLE HOOD SIZE 2: SERIES HA; HD
SUITABLE INSERTION AND EXTRACTION TOOL:
SCREWDRIVER 0,5x3 DIN 5264

3 Strip lenght: Screw conection 10mm
Spring clamp conection 10mm Crimp conection 7.5mm

4 STANDARDS:
DIN EN 61984; DIN EN 60664-1

⚠5 PACKAGING
10 SETS IN A CARTON, PRE-MOUNTED

⚠6 SPECIAL PACKAGING
200 PIECES IN A KANN-BAN BOT

⚠7 SPECIAL PACKAGING
100 PIECES IN A KANN-BAN BOT

				4		4				fixing screw	stainl. steel	blank/even		8	M3x10
4		4			4		4	4	4	fixing screw	Stahl/steel	nickel plated	blue	7	M3x10
					1					socket insert screw	PBT		light beige	6	with AU contact
							1			cover spring strain clip	PBT		light beige	5	
	1					1		1		cover crimp	PBT		light beige	4	
1		1	1	1	1				1	cover screw	PBT		light beige	3	
							1			socket insert spring strain clip	PBT		light beige	2	
1	1	1	1	1		1		1	1	socket insert crimp&screw	PBT		light beige	1	
1-2	1-0	0-9	0-8	0-4	0-6	0-5	7-1	2-3	1-1	DESCRIPTION / BENENNUNG	MATERIAL	Surface	COLOR / FARBE	ITEM NO. POS.	NOTES
⚠7	⚠5	⚠6	⚠5	⚠5	⚠5	⚠5	⚠5	⚠5	⚠5						
HA.10.Bu.S.WIE	HA.10.Bu.C-OBS	HA.10.Bu.S.KM	HA.10.Bu.S-OBS	HA.10.Bu.S-VA.	HA.10.Bu.S-AU	HA.10.Bu.C-VA	HA.10.Bu.SC	HA.10.Bu.C	HA.10.Bu.S						

ORDERING TEXT / BESTELLTEXT

THIS DRAWING IS A CONTROLLED DOCUMENT FOR AMP INCORPORATED.
IT IS SUBJECT TO CHANGE AND THE CONTROLLING ENGINEERING ORGANIZATION SHOULD BE CONTACTED FOR THE LATEST REVISION.
DIESES ZEICHNUNGSDOKUMENT WIRD DURCH AMP INCORPORATED KONTROLLIERT.
AENDERUNGEN, DIE DEM TECHNISCHEN FORTSCHRITT DIENEN, SIND VORBEHALTEN.
DEN JEWEILS LETZTGUELTIGEN AENDERUNGSSTAND ERFAHREN SIE AUF ANFRAGE.

DIMENSIONS:
DIMENSIONEN:
mm

TOLERANCES UNLESS OTHERWISE SPECIFIED:
ALLGEMEINTOLERANZEN
n. ISO 8015
n. ISO 2768 - mH -E
n. DIN 16901 - 140
0 PLC #-
1 PLC #-
2 PLC #-
3 PLC #-
ANGLES /WINKEL #-

MATERIAL ⚠5

FINISH /OBERFLAECHE/FARBE

DWN	Schneider	08.02.2000
CHK	Schweiger	08.02.2000
APVD	–	–
PRODUCT SPEC PRODUKTSPEZ.	108-74007	
APPLICATION SPEC VERARBEITUNGSSPEZ.	114-74009	
WEIGHT GEWICHT		

AMP
HTS Elektrotechnik
53819 Neunkirchen, Germany

NAME
Socket insert
Buchseneinsatz HA.10.Bu

SIZE	CAGE CODE	DRAWING NO ZEICHNUNGS-NR.	RESTRICTED TO NUR FUER
A3	00779	C-1103415	–

CUSTOMER DRAWING /KUNDENZEICHNUNG

MASSSTAB	BLATT	OF VON	REV
1:1	1	1	D1