THIS DRAWING IS UNPUBLISHED. RELEASED FOR PUBLICATION -,- .
© COPYRIGHT - By - ALL RIGHTS RESERVED.

LOC	DIST
HM	00

REVISIONS

P	LTR	DESCRIPTION	DATE	DWN	APVD
	G1	REVISED PER ECO-11-005033	21MAR11	RK	HMR
	G2	ADD 1/3, REV ECO-11-011931	10JUN2011	LH	SA

ELECTRICAL SCHEMATIC
T568A

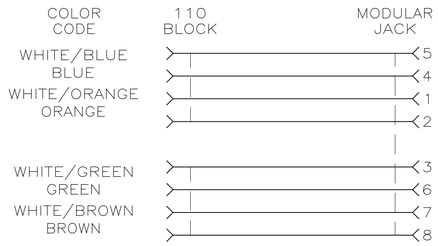

ELECTRICAL SCHEMATIC
T568B

1. MATERIAL: HOUSING – POLYCARBONATE, 94V-0 RATED. SEE TABLE FOR COLOR. 110 BLOCKS – POLYCARBONATE, 94V-0 RATED. JACK CONTACTS – PHOSPHOROUS BRONZE, PLATED WITH 1.27μm [.000050] MINIMUM THICK GOLD IN LOCALIZED AREA AND 3.81μm [.000150] MINIMUM THICK MATTE TIN IN SOLDER AREA OVER 1.27μm [.000050] MINIMUM THICK NICKEL UNDERPLATE.

2. 110 BLOCK WILL TERMINATE 22-26 AWG SOLID OR 7 STRAND CONDUCTORS, 1.27 [.050] MAXIMUM INSULATION DIAMETER.

3. MOUNTING PANEL THICKNESS 1.473 – 1.600 [.058 – .063].

4. ONE MODULAR JACK ASSEMBLY PER POLYBAG.

5. CAVITY CONFORMS TO FCC RULES AND REGULATIONS PART 68 SUBPART F REQUIREMENTS.

6. THESE TWO SUGGESTED CUTOUT OPENINGS ARE USED IN TANDEM WITH DUAL FRONT AND BACK CUTOUTS.

7. TWENTY FIVE MODULAR JACK ASSEMBLIES PER POLYBAG.

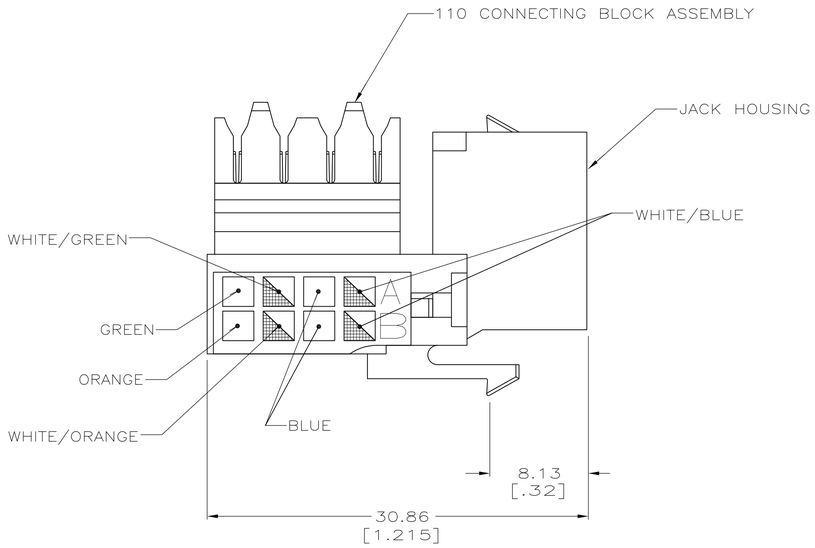

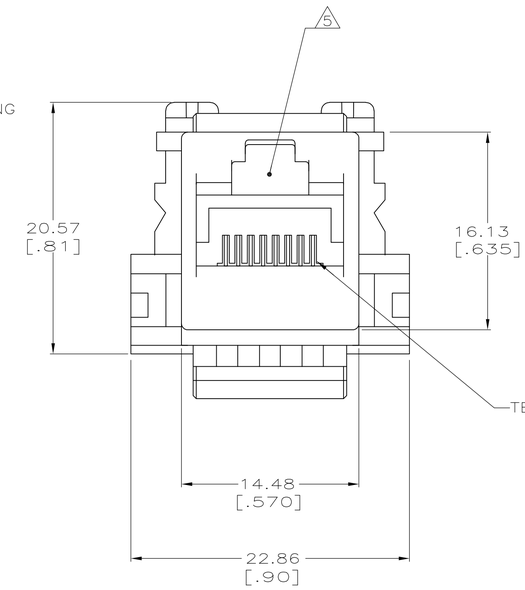

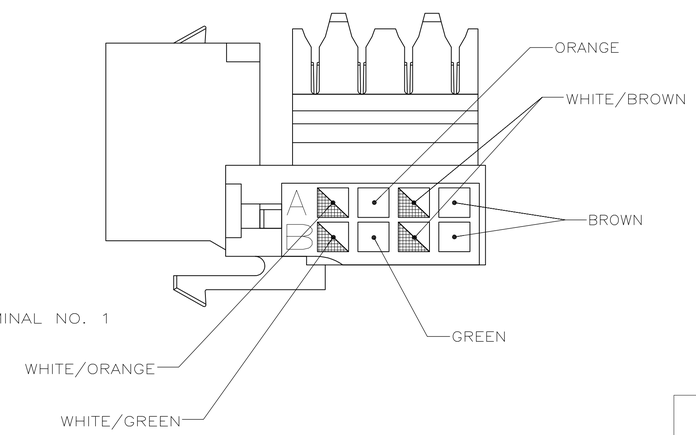

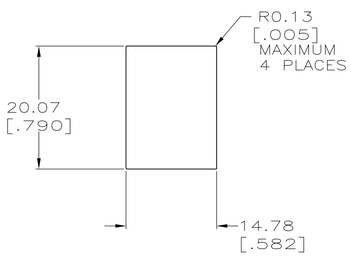

SUGGESTED SINGLE PANEL CUTOUT
SCALE 2:1

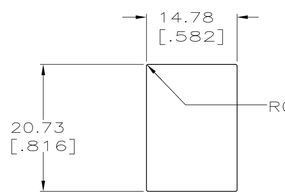

SUGGESTED BACK PANEL CUTOUT
SCALE 2:1
6

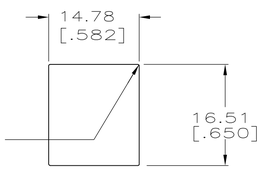

SUGGESTED FRONT PANEL CUTOUT
SCALE 2:1
6

PACKAGED	HOUSING COLOR	PART NUMBER
7	ALPINE WHITE	3-406372-3
	ELECTRIC IVORY	3-406372-1
	VIOLET	3-406372-0
	GREEN	2-406372-9
	YELLOW	2-406372-8
	RED	2-406372-7
	BLUE	2-406372-6
	ORANGE	2-406372-5
	NEMA GRAY	2-406372-4
	WHITE	2-406372-3
	BLACK	2-406372-2
	LIGHT ALMOND	2-406372-1
4	ALPINE WHITE	1-406372-3
	ELECTRIC IVORY	1-406372-1
	VIOLET	1-406372-0
	GREEN	406372-9
	YELLOW	406372-8
	RED	406372-7
	BLUE	406372-6
	ORANGE	406372-5
	NEMA GRAY	406372-4
	WHITE	406372-3
	BLACK	406372-2
	LIGHT ALMOND	406372-1

THIS DRAWING IS A CONTROLLED DOCUMENT.

DIMENSIONS: mm [INCHES]

TOLERANCES UNLESS OTHERWISE SPECIFIED:
0 PLC ± –
1 PLC ± –
2 PLC ± 0.25[.01]
3 PLC ± 0.13[.005]
4 PLC ± –
ANGLES ± –

MATERIAL 1
FINISH 1

DWN DL DRUMMOND 25 NOV 96
CHK T. WOOTEN 09 JAN 97
APVD G. BOWMAN 09 JAN 97
PRODUCT SPEC 108-1389
APPLICATION SPEC 408-3389
WEIGHT –

TE Connectivity

NAME
110 MODULAR JACK ASSEMBLY, RJ45, ENHANCED CAT5, UNIVERSAL
–

SIZE	CAGE CODE	DRAWING NO	RESTRICTED TO
A1	00779	C-406372	–

CUSTOMER DRAWING SCALE 4:1 SHEET 1 OF 1 REV G2

4805 (3/11)