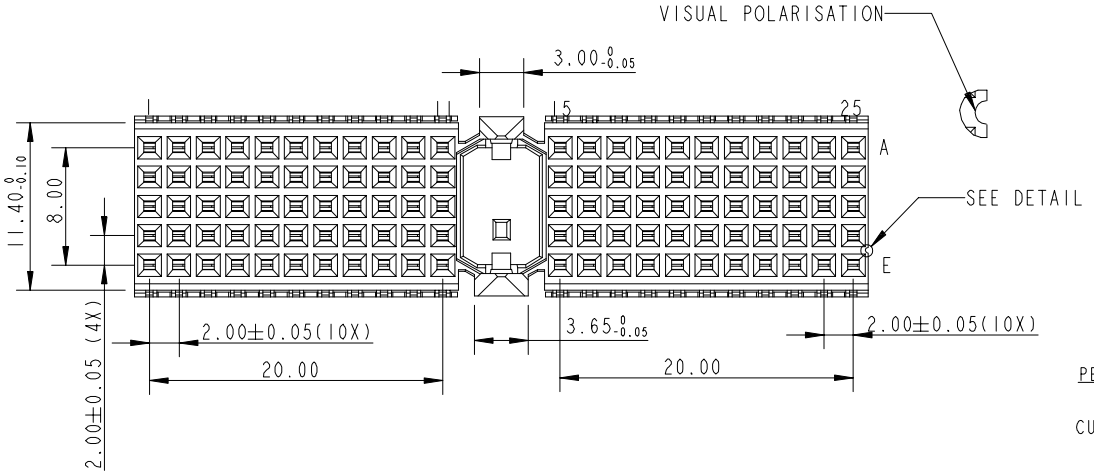

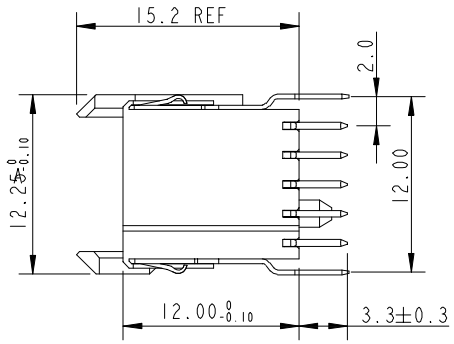

PERFORMANCE CHARACTERISTICS

CURRENT RATING 1.5A AT 20°C (FULLY LOADED)
1 A AT 70°C (FULLY LOADED)

RATED VOLTAGE : 500 V AC (CONT /CONT)

OPERATING TEMPERATURE : -55°C TO 125°C

CONTACT RESISTANCE 20 MΩ MAX

INSERTION FORCE : 0.75N MAX/CONT

EXTRACTION FORCE : 0.15N MIN/CONT

INSULATION RESISTANCE : 10^4 MΩ MIN

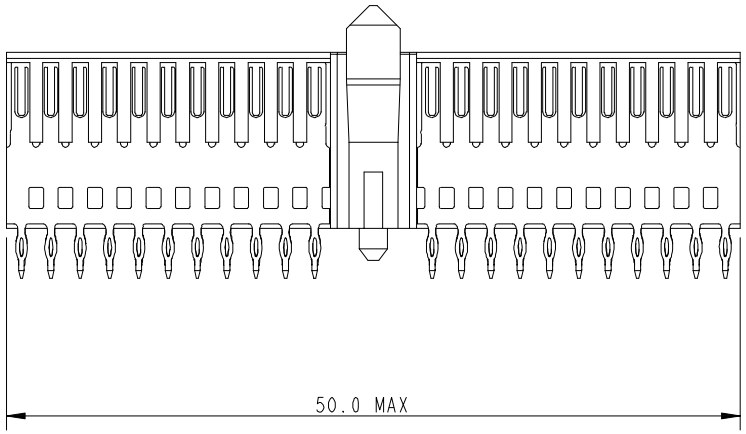

NOTES

1. "LEAD FREE INDICATOR :LF=LEAD FREE
PERFORMANCE LEVEL INDICATIOR
(REF DWG NO.BSC .201844.003)"

2. THIS PRODUCT IS CSA APPROVED.
THIS PRODUCT IS UL RECOGNIZED.

3. FOR RECOMMENDED PTH DIMENSIONS REFER DRAWING :BS.A.201572.001

4. THIS PRODUCT (LF) MEETS EUROPEAN UNION DIRECTIVES AND OTHER COUNTRY REGULATIONS AS DESCRIBED IN GS-22-008

LAY OUT
P.C.B -HOLE

(FRONT SIDE)

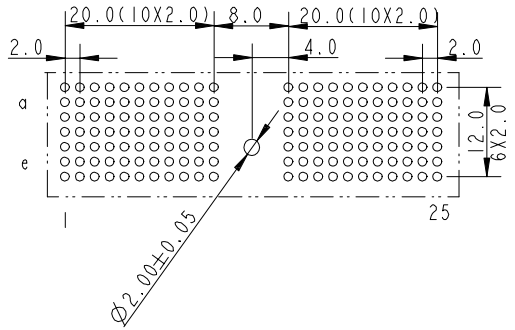

rev	ecn no	dr	date
A	CONVERSION REVISION 00	KN	14-09-01
B	DG05-0278	Kason	02-08-05
C	DG10-0110	NZ	2010.9.3
-	-	-	-
-	-	-	-
-	-	-	-
-	-	-	-

Material			Spec ref		
Mat code				tolerance	projection / MM
Heattreat				1DEC±0.2 1DEC 2DEC±0.1 2DEC ANGLES±1° HOEKEN	
Plating/Finish					
Dr	W.Panis	27-01-95		size A4	Scale 2.000
Eng			Product family	MILLIPACS	
Chr			Model Name		ECN
Appr			Model Revision		REL Level
title	MILLIPACS 2/TYPE A/SHIELDED		dwg no	BSC201907004	Rev. C
Pro/E file	catalog no	HM2S01PE5101----	CUSTOMER DRAWING		sheet 1 of 1

Tous droits strictement reservés. Reproduction ou communication a des tiers interdite sous quelque forme que ce soit sans autorisation écrite du propietaire. Propriete de c FCI. Droits de reproduction FCI.

All rights strictly reserved. Reproduction or issue to third parties in any form whatever is not permitted without written authority from the proprietor. Property of FCI. Copyright FCI.