THIS DRAWING IS UNPUBLISHED.
DIFFUSION RESTREINTE

RELEASED FOR PUBLICATION 2006
LIBRE A LA DIFFUSION

© COPYRIGHT 2006 BY -
ALL RIGHTS RESERVED.
TOUS DROITS RESERVES

LOC	DIST
F	00

REVISIONS

P	LTR	DESCRIPTION MODIFICATIONS	DATE	DWN DESS.	APVD APP.
	B1	REVISED PER ECO-11-005150	28MAR2011	RK	HMR
	C	NEW PART NUMBER 1-953697-1 ADDED	08APR2013	EC	XR
	D	OBSOLETE PN : 1-953697-1	02SEP22	SE	

KEYING TABLE (table de detrompage)

COLOR couleur	X1	X2	PART NO
BLACK noir	6.5 (10)	0 (11)	OBSOLETE ~~1-953697-1~~ 953697-1
WHITE blanc	5.2 (12)	1.3 (13)	953697-2
BLUE bleu	4 (14)	2.5 (15)	953697-3
YELLOW jaune	2.7 (16)	3.8 (17)	953697-4
GREY gris	1.5 (18)	5 (19)	953697-5
BROWN marron	0 (20)	6.3 (21)	953697-6

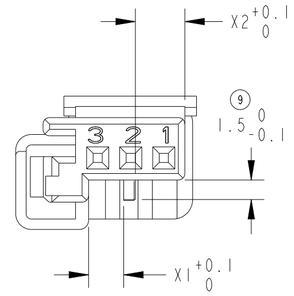

1. CAVITY MARKING / reperes alveoles
2. AMP STAMP OR TE CONNECTIVITY STAMP(following mold) / logo AMP ou logo TE CONNECTIVITY(suivant moule)
3. MATERIAL IDENTIFICATION / marquage matiere
4. MOLD REVISION NUMBER (optional) / indice de revision moule (optionnel)
5. MOLD IDENTIFICATION / identification moule
6. MOLD CAVITY IDENTIFICATION NUMBER / numero d'empreinte moule
7. EXCHANGEABLE MANUFACTURING DATE / date de fabrication echangeable

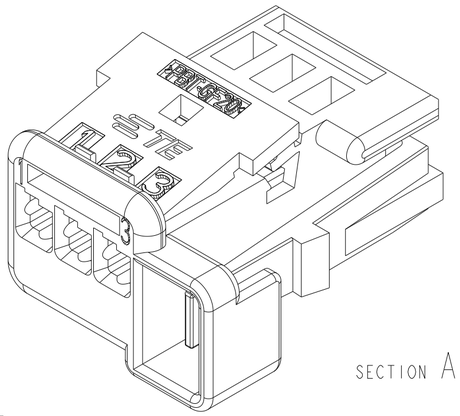

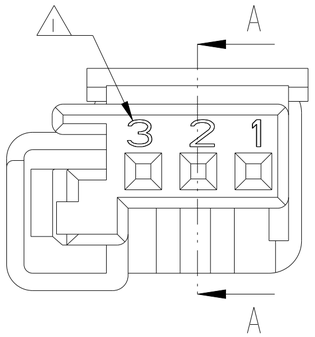

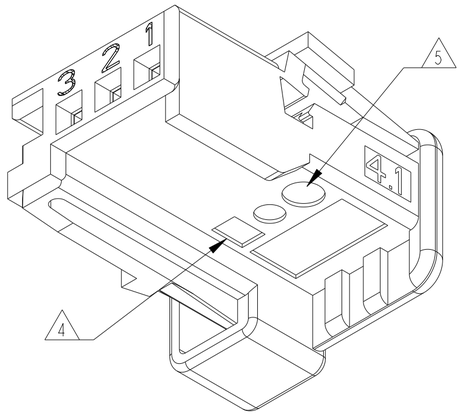

SECTION A-A

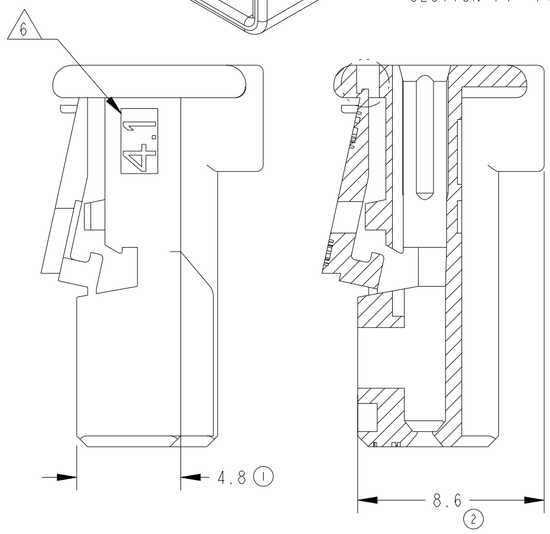

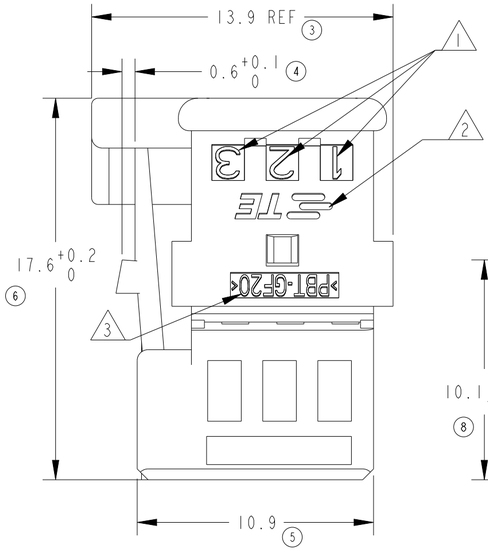

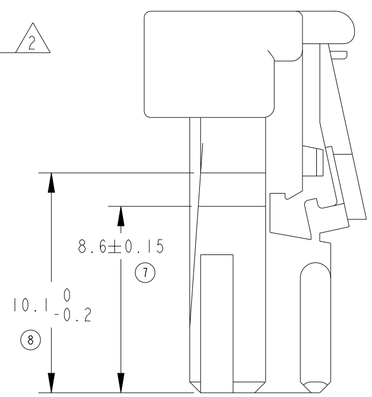

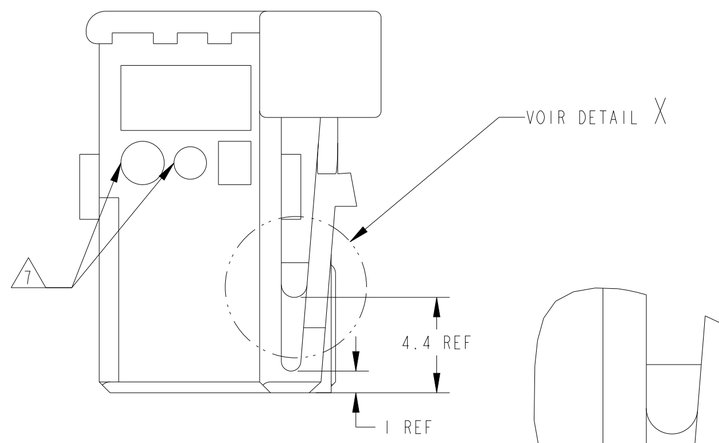

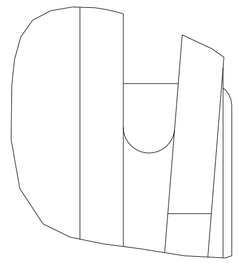

DETAIL X
SCALE 10:1

PERMISSIBLE FORM FOR THE LOCKING DEVICE
formes admissibles pour le verrou

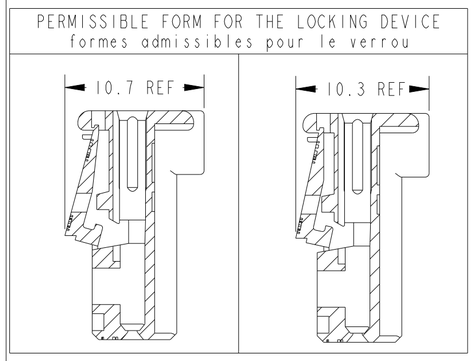

SECTION A-A
SCALE 3:1

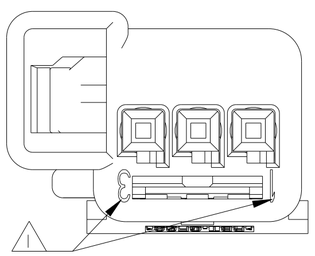

THIS DRAWING IS A CONTROLLED DOCUMENT.		DWN/DESSINE 22MAR2006 M. POLIFONTE	TE Connectivity
DIMENSIONS: mm	TOLERANCES UNLESS OTHERWISE SPECIFIED: TOLERANCES NON SPECIFIEES	CHK/VERIFIE 22MAR2006 X.ROUILLARD	NAME TITRE 3 POS. MQS RECEPTACLE HOUSING POSITIVE MATE porte-clips 3 voies MQS avaloir
	1 SIGN NO OF DECIMALS 0 PLC/DEC. ± 1 PLC/DEC. ± 2 PLC/DEC. ± 3 PLC/DEC. ± 4 PLC/DEC. ± ±0.2	APVD/APROUVE 22MAR2006 J.DAHER	
		PRODUCT SPEC SPEC. PRODUIT 108-15226	
		APPLICATION SPEC SPEC. APPLICATION 411-15626	SIZE FORMAT A2 / CAGE CODE 00779 / DRAWING NO No PLAN C-953697 / RESTRICTED TO RESERVE A -
MATERIAL/MATIERE PBT-GF20	ANGLES ±5° FINISH/FINITION -	WEIGHT MASSE APPROX. 1g	Customer Drawing /PLAN CLIENT UNIQUEMENT POUR REFERENCE / SCALE ECHELLE 5:1 / SHEET FEUILLE 1 OF DE 1 / REV D