SPU0414HR5H-SB

Amplified SiSonic™ Microphone

The SPU0414HR5H-SB is a miniature, high-performance, low power, top port silicon microphone. Using Knowles' proven high performance SiSonic™ MEMS technology, the SPU0414HR5H-SB consists of an acoustic sensor, a low noise input buffer, and an output amplifier. These devices are suitable for applications such as cellphones, smart phones, laptop computers, sensors, digital still cameras, portable music recorders, and other portable electronic devices where excellent wideband audio performance and RF immunity are required.

Features:

- Up to 20dB of Gain
- Low Current
- Small package
- MaxRF protection
- Ultra-Stable Performance
- Standard SMD Reflow
- Omnidirectional

12/04/2012
©2012 Knowles Electronics

1. ABSOLUTE MAXIMUM RATINGS

Parameter	Absolute Maximum Rating	Units
V_{DD} to Ground	-0.5, +5.0	V
OUT to Ground	-0.3, V_{DD} + 0.3	V
Input Current to Any Pin	±5	mA
Temperature Range	-40 to +100	°C

Stresses exceeding these "Absolute Maximum Ratings" may cause permanent damage to the device. These are stress ratings only. Functional operation at these or any other conditions beyond those indicated under "Acoustic & Electrical Specifications" is not implied. Exposure beyond those indicated under "Acoustic & Electrical Specifications" for extended periods may affect device reliability.

2. ACOUSTIC & ELECTRICAL SPECIFICATIONS

TEST CONDITIONS: 23 ±2°C, 60-70% R.H., V_{DD}(min) < V_{DD} < V_{DD}(max), no load, unless otherwise indicated

Parameter	Symbol	Conditions	Min	Typ	Max	Units
Supply Voltage[1]	V_{DD}		1.5	-	3.6	V
Supply Current[1,2]	I_{DD}		-	155	220	µA
Sensitivity[1]	S	94 dB SPL @ 1 kHz	-25	-22	-19	dBV/Pa
Signal to Noise Ratio	SNR	94 dB SPL @ 1 kHz, A-weighted	-	59	-	dB(A)
Total Harmonic Distortion	THD	94 dB SPL @ 1 kHz, S = Typ, R_{load} > 2 kΩ	-	-	1	%
Acoustic Overload Point	AOP	10% THD @ 1 kHz, S = Typ, V_{DD} = 3.6V, R_{load} > 2 kΩ	115[3]	-	-	dB SPL
DC Output		V_{DD} = 1.5V	-	0.93	-	V
Output Impedance	Z_{OUT}	@ 1 kHz	-	-	400	Ω
Directivity			Omnidirectional			
Polarity		Increasing sound pressure	Decreasing output voltage			

[1] 100% tested.

[2] Maximum specifications are measured at maximum V_{DD}. Typical specifications are measured at V_{DD} = 1.8V.

[3] For gain = 20dB, AOP(min) = 95 dB SPL.

©2012 Knowles Electronics

3. FREQUENCY RESPONSE CURVE

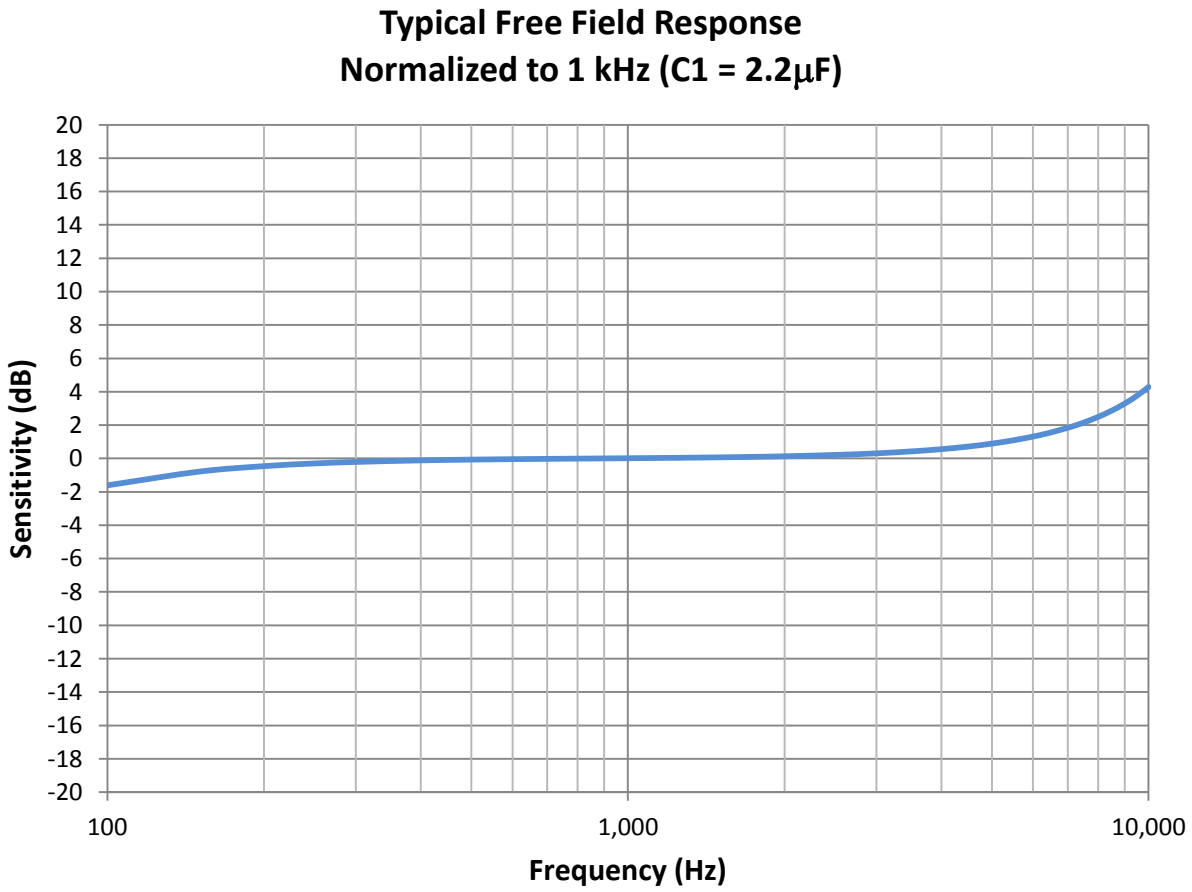

©2012 Knowles Electronics

4. INTERFACE CIRCUIT

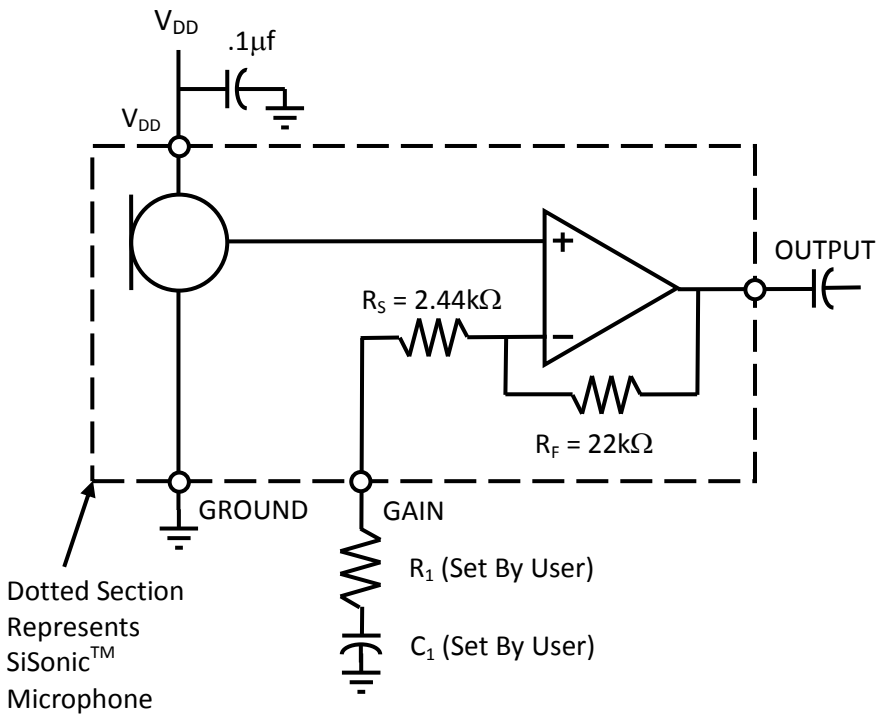

Gain	GAIN Pin Termination
Unity Gain (0dB)	Connect GAIN to OUTPUT
Max Gain (20dB)	Set R_1 = 0Ω. Set C_1 according to equation below: Highpass corner frequency = $\frac{1}{2\pi R_S C_1}$
Adjustable Gain (0dB to 20dB)	Set R_1 and C_1 according to the equations below: Gain(dB) = $20log(1+\frac{R_F}{R_S+R_1})$ Highpass corner frequency = $\frac{1}{2\pi(R_S+R_1)C_1}$

Note: Capacitors near the microphone should not contain Class 2 dielectrics.
Detailed information on acoustic, mechanical, and system integration can be found in the latest *SiSonic™ Design Guide* application note.

©2012 Knowles Electronics

5. MECHANICAL SPECIFICATIONS

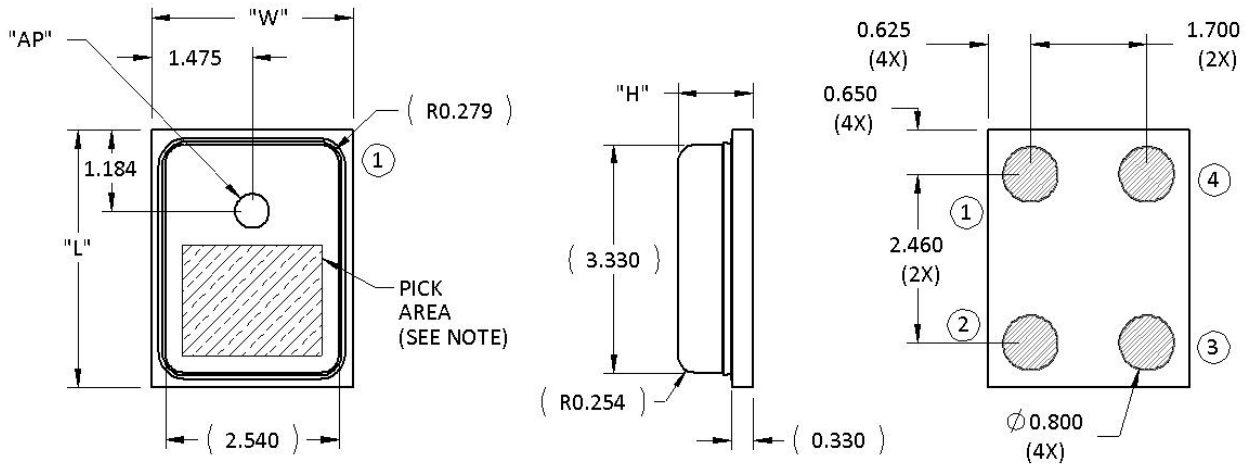

Item	Dimension	Tolerance
Length (L)	3.76	±0.10
Width (W)	2.95	±0.10
Height (H)	1.10	±0.10
Acoustic Port (AP)	Ø0.50	±0.05

Pin #	Pin Name	Type	Description
1	V_{DD}	Power	Power Supply
2	GROUND	Power	Ground
3	GAIN	Signal	Connect resistor to set gain
4	OUTPUT	Signal	Output Signal

Notes: Pick Area only extends to 0.25 mm of any edge or hole unless otherwise specified.
Dimensions are in millimeters unless otherwise specified.
Tolerance is ±0.15mm unless otherwise specified

©2012 Knowles Electronics

6. EXAMPLE LAND PATTERN

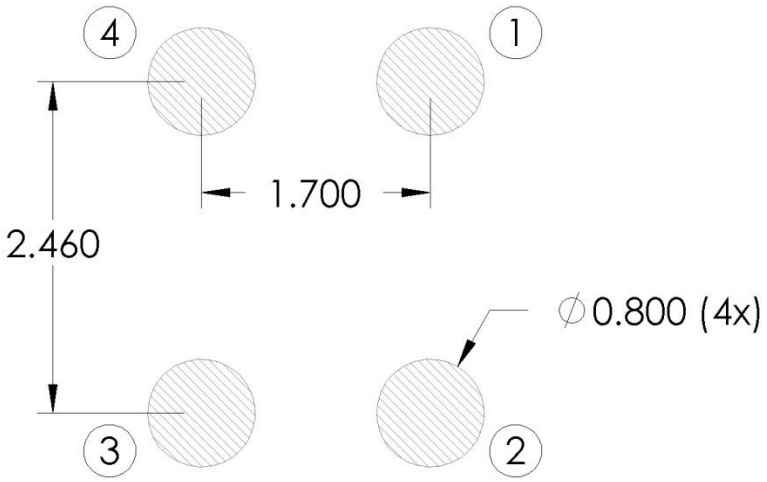

7. EXAMPLE SOLDER STENCIL PATTERN

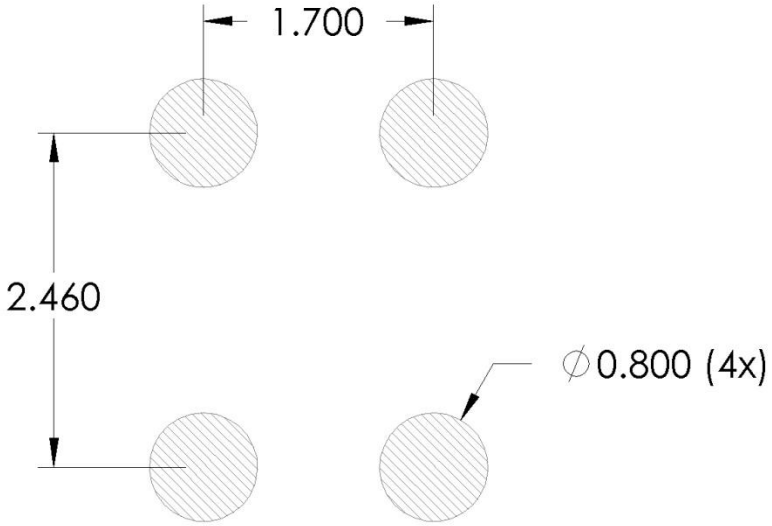

Notes: Dimensions are in millimeters unless otherwise specified.
Further optimizations based on application should be performed.

©2012 Knowles Electronics

8. PACKAGING & MARKING DETAIL

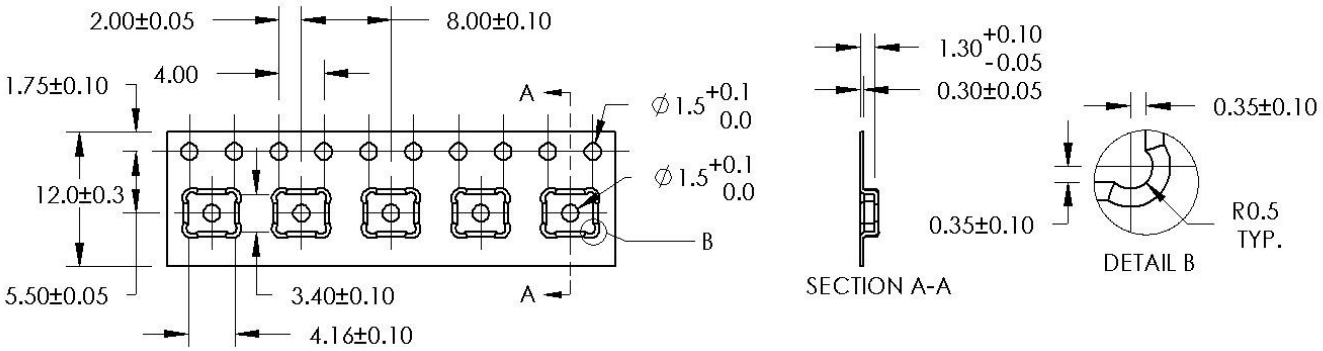

Model Number	Suffix	Reel Diameter	Quantity Per Reel
SPU0414HR5H-SB	-7	13”	5,700

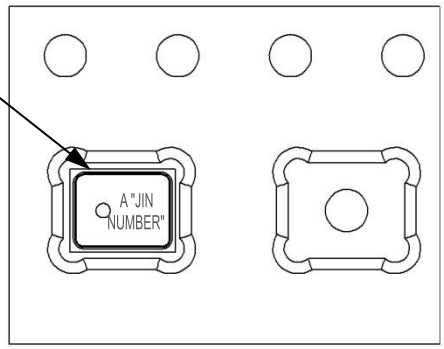

Alpha Character A:

- “S”: Knowles SiSonic™ Production
- “E”: Knowles Engineering Samples
- “P”: Knowles Prototype Samples

“JIN NUMBER”:

Unique Job Identification Number for product traceability

Notes: Dimensions are in millimeters unless otherwise specified.
Vacuum pickup only in the pick area indicated in Mechanical Specifications.
Tape & reel per EIA-481.
Labels applied directly to reel and external package.

©2012 Knowles Electronics

9. RECOMMENDED REFLOW PROFILE

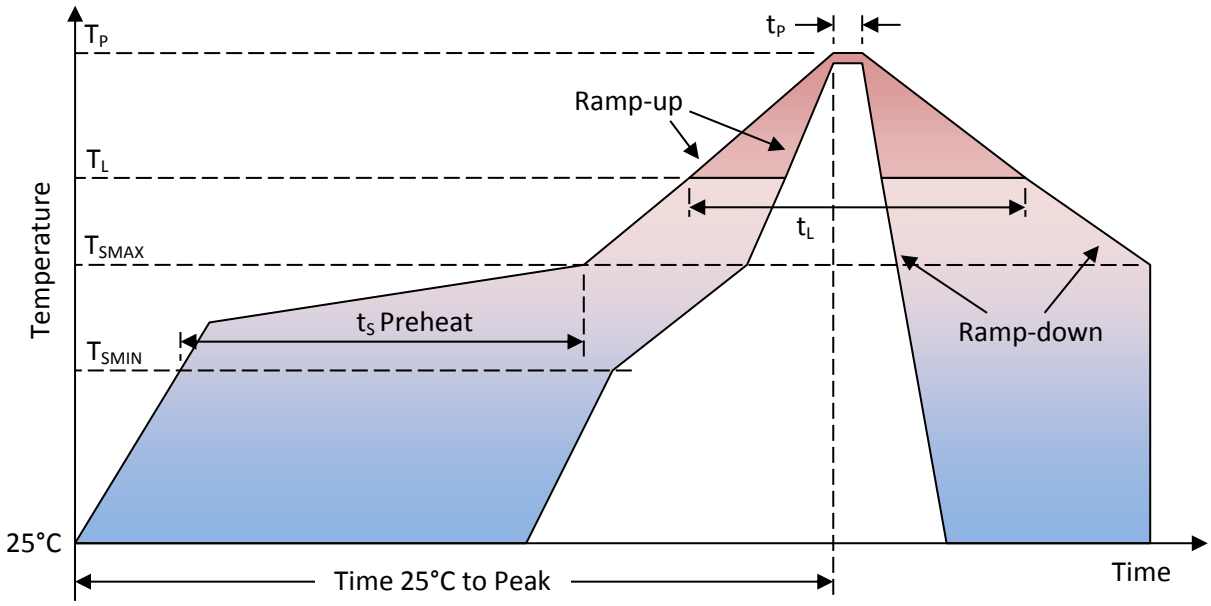

Profile Feature	Pb-Free
Average Ramp-up rate (T_{SMAX} to T_P)	3°C/second max.
Preheat • Temperature Min (T_{SMIN}) • Temperature Max (T_{SMAX}) • Time (T_{SMIN} to T_{SMAX}) (t_S)	 150°C 200°C 60-180 seconds
Time maintained above: • Temperature (T_L) • Time (t_L)	 217°C 60-150 seconds
Peak Temperature (T_P)	260°C
Time within 5°C of actual Peak Temperature (t_P)	20-40 seconds
Ramp-down rate (T_P to T_{SMAX})	6°C/second max
Time 25°C to Peak Temperature	8 minutes max

Notes: Based on IPC/JDEC J-STD-020 Revision C.
All temperatures refer to topside of the package, measured on the package body surface.

©2012 Knowles Electronics

10. ADDITIONAL NOTES

(A) Shelf life: Twelve (12) months when devices are to be stored in factory supplied, unopened ESD moisture sensitive bag under maximum environmental conditions of 30°C, 70% R.H.
(B) MSL (moisture sensitivity level) Class 1.
(C) Maximum of 3 reflow cycles is recommended.
(D) In order to minimize device damage:

- Do not board wash or clean after the reflow process.
- Do not brush board with or without solvents after the reflow process.
- Do not directly expose to ultrasonic processing, welding, or cleaning.
- Do not insert any object in port hole of device at any time.
- Do not apply over 30 psi of air pressure into the port hole.
- Do not pull a vacuum over port hole of the microphone.
- Do not apply a vacuum when repacking into sealed bags at a rate faster than 0.5 atm/sec.

11. MATERIALS STATEMENT

Meets the requirements of the European RoHS directive 2002/95/EC as amended.

Meets the requirements of the industry standard IEC 61249-2-21:2003 for halogenated substances and Knowles Green Materials Standards Policy section on Halogen-Free.

Ozone depleting substances are not used in the product or the processes used to make the product, including compounds listed in Annex A, B, and C of the “Montreal Protocol on Substances That Deplete the Ozone Layer.”

©2012 Knowles Electronics

12. RELIABILITY SPECIFICATIONS

Test	Description
Thermal Shock	100 cycles air-to-air thermal shock from -40°C to +125°C with 15 minute soaks. (IEC 68-2-4)
High Temperature Storage	1,000 hours at +105°C environment (IEC 68-2-2 Test Ba)
Low Temperature Storage	1,000 hours at -40°C environment (IEC 68-2-2 Test Aa)
High Temperature Bias	1,000 hours at +105°C under bias (IEC 68-2-2 Test Ba)
Low Temperature Bias	1,000 hours at -40°C under bias (IEC 68-2-2 Test Aa)
Temperature / Humidity Bias	1,000 hours at +85°C/85% R.H. under bias. (JESD22-A101A-B)
Vibration	4 cycles of 20 to 2,000 Hz sinusoidal sweep with 20 G peak acceleration lasting 12 minutes in X, Y, and Z directions. (Mil-Std-883E, method 2007.2 A)
Electrostatic Discharge	3 discharges of ±8 kV direct contact to lid while unit is grounded (IEC 61000-4-2) and 3 discharges of ±2 kV direct contact to I/O pins. (MIL 883E, Method 3015.7)
Reflow	5 reflow cycles with peak temperature of +260°C
Mechanical Shock	3 pulses of 10,000 G in the X, Y, and Z direction (IEC 68-2-27, Test Ea)

Note: After reliability tests are performed, the sensitivity of the microphones shall not deviate more than 3 dB from its initial value.

©2012 Knowles Electronics

13. SPECIFICATION REVISIONS

Revision	Specification Changes	Date
A	Initial Release (C10109400)	4/23/09
C	Update Sections 2, 3, 4, 6, 8; misc cleanup (C10112517)	10/21/10
D	Update Section 2, 3, 7, 8, 10, 11; misc cleanup (C10113579)	11/10/11
E	Released in new format; add DC Output; new JIN designation (C10114423)	12/04/12

Information contained herein is subject to change without notice. It may be used by a party at their own discretion and risk. We do not guarantee any results or assume any liability in connection with its use. This publication is not to be taken as a license to operate under any existing patents.

©2012 Knowles Electronics

Mouser Electronics

Authorized Distributor

Click to View Pricing, Inventory, Delivery & Lifecycle Information:

Knowles:
SPU0414HR5H-SB