THIS DRAWING IS UNPUBLISHED. RELEASED FOR PUBLICATION -,- .
© COPYRIGHT - BY TYCO ELECTRONICS CORPORATION. ALL RIGHTS RESERVED.

LOC	DIST
AD	00

REVISIONS

P	LTR	DESCRIPTION	DATE	DWN	APVD
	B	REV PER EC 0S12-0302-05	05DEC05	BC	GS

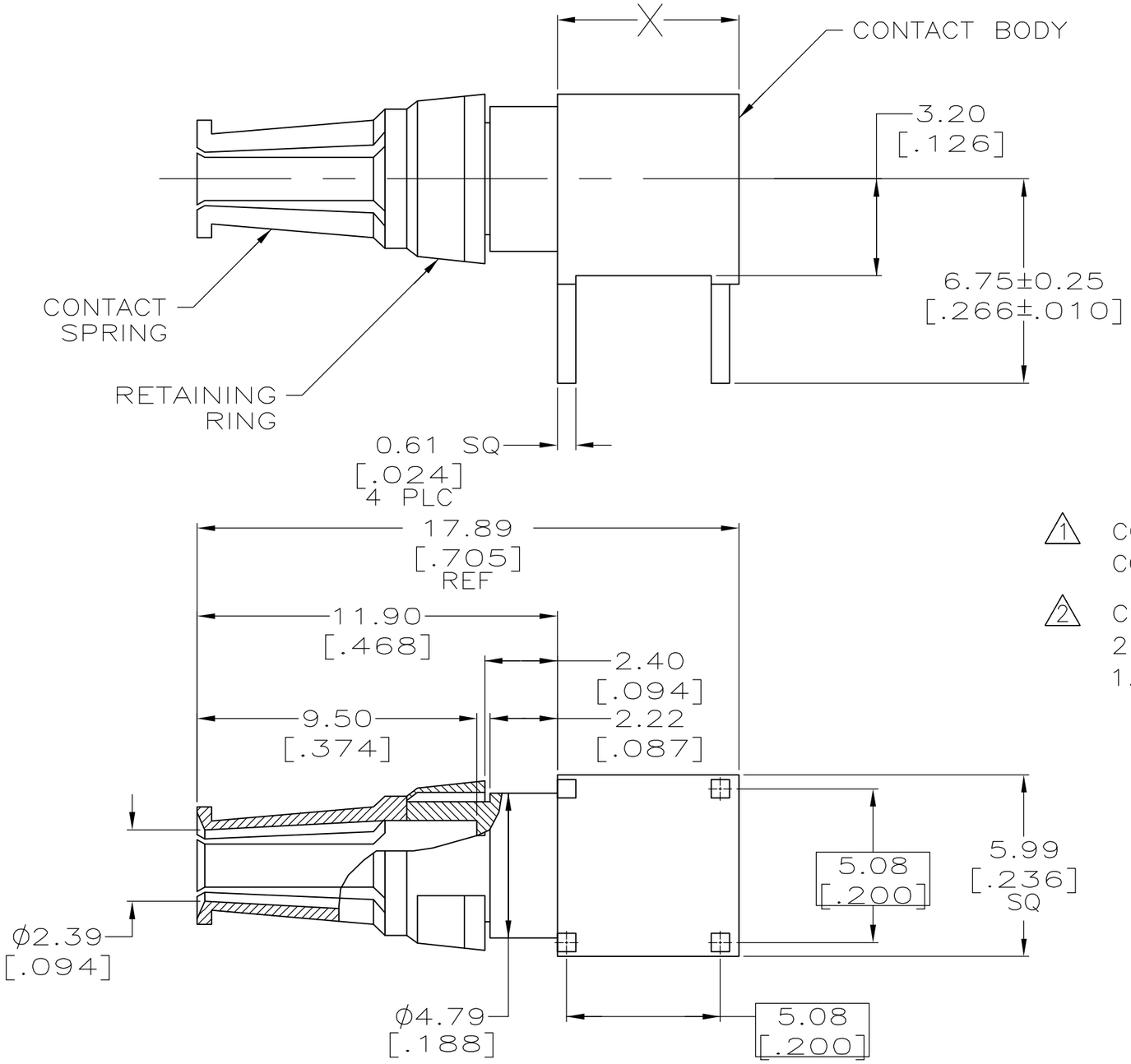

1. CONTACT SPRING & RETAINING RING: BERYLLIUM COPPER. CONTACT BODY: BRASS.

2. CONTACT FINISH: 0.76μm[.000030] MIN GOLD IN CONTACT AREA, 2.54μm[.000100] MIN TIN-LEAD IN AREA "X", ALL OVER 1.27μm[.000050] MIN NICKEL.

148534-1

PART NUMBER

THIS DRAWING IS A CONTROLLED DOCUMENT.

DIMENSIONS: INCHES

TOLERANCES UNLESS OTHERWISE SPECIFIED:

0 PLC	± -
1 PLC	± -
2 PLC	± 0.13 [.005]
3 PLC	± -
4 PLC	± -
ANGLES	± -

MATERIAL 1

FINISH 2

DWN	B.CARBO	04 JUN 99
CHK	C.RICHARD	04 JUN 99
APVD	C.RICHARD	04 JUN 99
PRODUCT SPEC	—	
APPLICATION SPEC	—	
WEIGHT	—	

CUSTOMER DRAWING

tyco Electronics

Tyco Electronics Corporation
Harrisburg, PA 17105-3608

NAME: POWER CONTACT, EUROCARD TYPE M, FEMALE 90 DEG, PRINTED CIRCUIT BOARD MOUNT, MFBL, WITH SOLDER POSTS, (40 AMP)

SIZE	CAGE CODE	DRAWING NO	RESTRICTED TO
A3	00779	C-148534	—

SCALE	SHEET	REV
6:1	1 OF 1	B