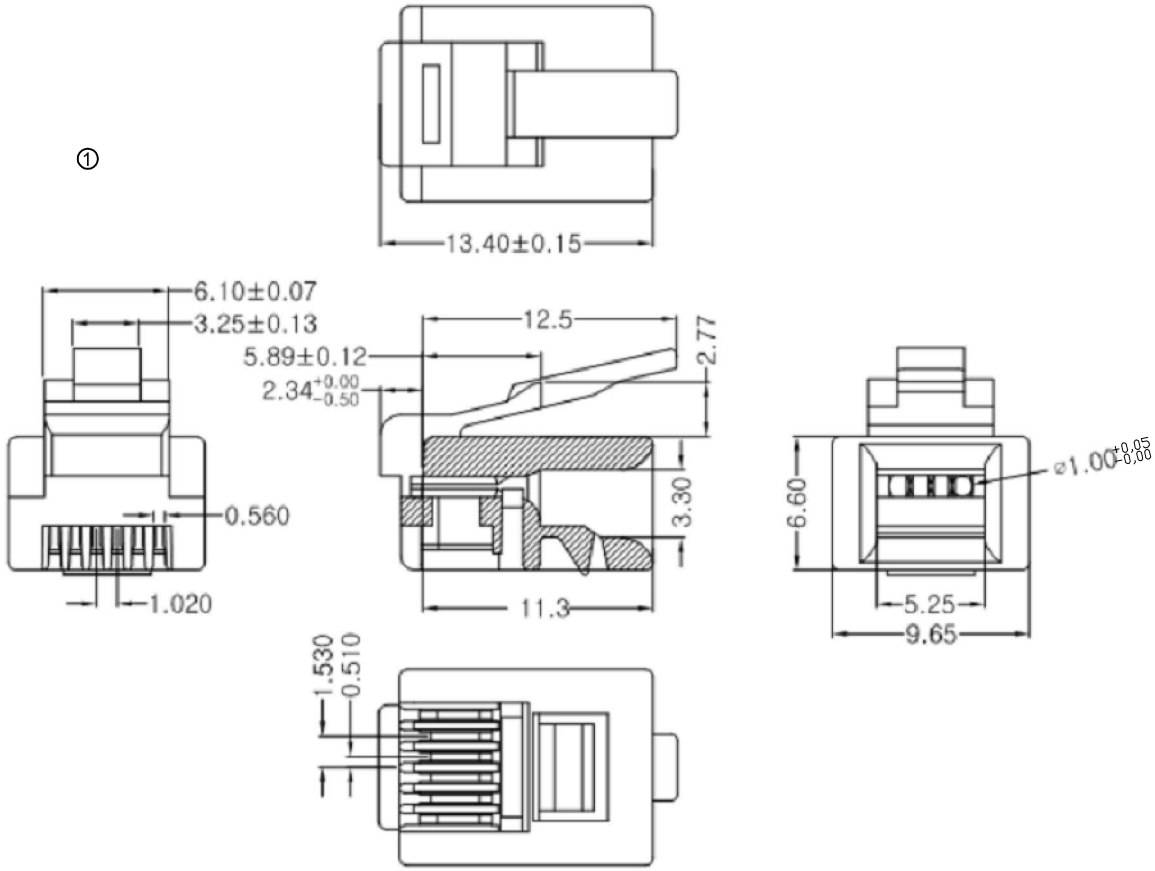

Specifications:

Material:
Housing: Poly Carbonate(PC) UL94V-2
Contact: Phosphor Bronze with 2 prongs
Plating: 6u" gold plated
100u" Nickel under plated
Operating temperature: -40°C to +125°C

Electrical:
Current rating: 250V AC max. at 2A
Dielectric: 500V AC
Insulation resistance: 500MΩ
Termination resistance: 35mΩ max after environmental tests
Tensile strength: 20 LBS (89N) min.
Durability: 500 mating cycles

Complies with FCC68/F
① Wire gauge: 30AWG-24AWG Stranded wire
Cable OD size: flat cable 2.5x5.0±0.02mm
Wire size: 0.95±0.05mm

RoHS compliant
Unit: mm

Scale	Free
TOLERANCE	
X.X	±0.20
X.XX	±0.10
X.XXX	±0.05
DIM	TOL
X.°	±3°
X.X°	±1.0°
Angle	TOL

Id.	Modification	Date	Name
①	Update to new drawing Add cable wire information	03.04.2019	Amy
⓪	Drawn	13.06.2016	Joanna

	Date	Name
Drawn	13.06.2016	Joanna
Approved	03.04.2019	Amy

ASSMANN WSW components

Customer-No.

ASSMANN WSW-No.
A-MO 6/4-SF

Drawing-No.
ASS 7278 CO

rev01

Replace

Sheet