DATE	REV	ECN	APP'D. BY
2/2/06	A2	7457	JM
3-21-06	A3	7549	TRM
7-15-08	A4	8488	TRM
6-19-12	A5	9512	SMN

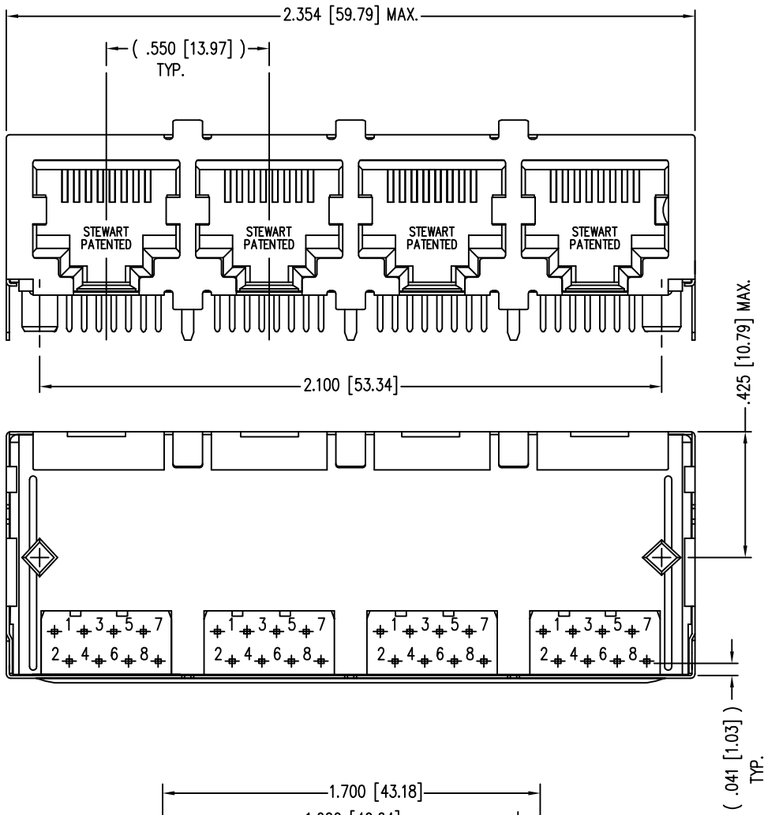

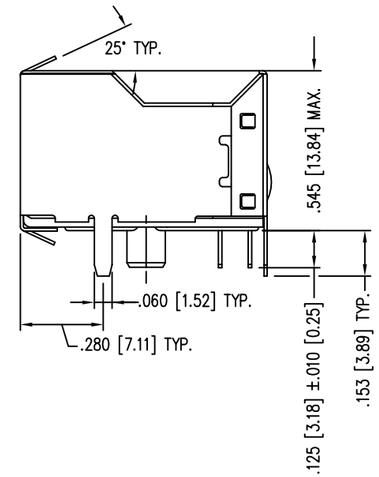

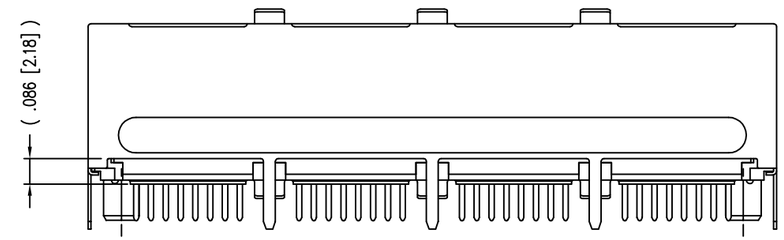

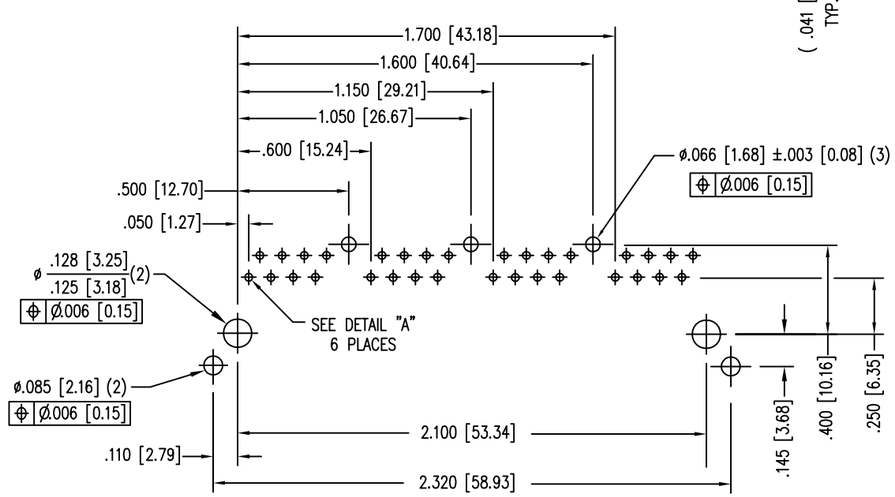

P.C.B. RECOMMENDED HOLE LAYOUT
SEEN FROM COMPONET SIDE
ALL CENTERLINE DIMENSIONS ARE BASIC.

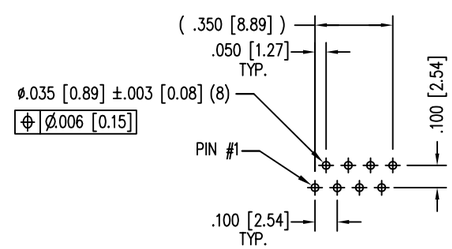

DETAIL "A"
TYPICAL HOLE LAYOUT

NOTES:

1. CONNECTOR MATERIALS:
   HOUSING: THERMOPLASTIC UL94 V-0
   CONTACTS/SHIELD: COPPER ALLOY
   SHIELD PLATING: NICKEL OR TIN
   CONTACT PLATING: SELECTIVE GOLD IN CONTACT AREA
   SEE CHART FOR PART NUMBER
2. FOR PRODUCT SPECIFICATIONS SEE PR022-01.
3. DIMENSIONS AND TOLERANCES COMPLY WITH FCC/CFR 47, PART 68.
4. DESIGNED FOR CATEGORY 5/5e APPLICATIONS.

30 MICRO-INCHES [0.76um]	SS-718804S-A-NF-AC
CONTACT PLATING IN MATING AREA	PART NUMBER

RoHS 2002/95/EC

THIRD ANGLE PROJECTION

DO NOT SCALE DRAWING

DRAWING IS SUBJECT TO CHANGE WITHOUT NOTICE

DIMENSIONS: INCHES [METRIC]

UNLESS OTHERWISE SPECIFIED TOLERANCES ARE ±.005 [0.13] ANGLES ARE ± 1°

SHEET NO. 1 OF 1

Bel Stewart Connector

11118 Susquehanna Trail South
Glen Rock, PA 17327-9199
(717) 235-7512 Fax: (717) 235-7954 http://www.stewartconnector.com

TITLE: EMI-RFI ONE PIECE SHIELDED, ESD GROUNDED
4 PORT PCB HARMONICA CAT 5/5e JACK PAC, NON-FLANGE

THIS DRAWING AND THE SUBJECT MATTER SHOWN THEREON ARE CONFIDENTIAL AND THE PROPRIETARY PROPERTY OF BEL STEWART CONNECTOR AND SHALL NOT BE REPRODUCED, COPIED, OR USED IN ANY MANNER WITHOUT PRIOR WRITTEN CONSENT OF BEL STEWART CONNECTOR. THIS PRODUCT MAY BE PROTECTED BY ONE OR MORE OF THE FOLLOWING US PATENTS: 563966 5791942 6217391 6368159 6419526 6602097 687722 6964587 7048590 7086909 7568950 7686650 OTHER PATENTS MAY BE PENDING.

DRN BY: KRL		DATE 3/20/06	
APPD BY: TRM		DATE 3-21-06	
DWG NO. CT710047		REV. A5	

REV. 6/3/05

AutoCAD