THIS DRAWING IS UNPUBLISHED. RELEASED FOR PUBLICATION -,- .
© COPYRIGHT - By - ALL RIGHTS RESERVED.

LOC	DIST
FT	0

REVISIONS

P	LTR	DESCRIPTION	DATE	DWN	APVD
	F2	REVISED PER ECO-11-004820	11MAR11	RK	HMR

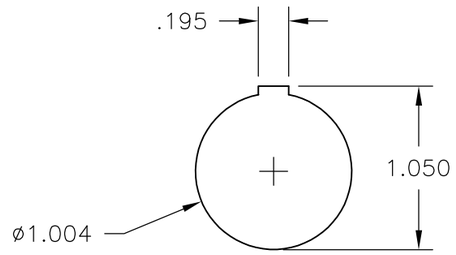

BACKEND DIMS.
OF RECEPTACLE

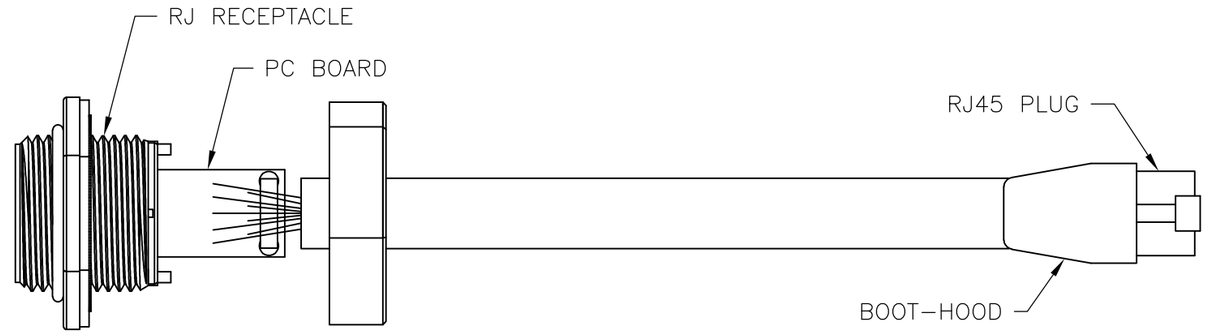

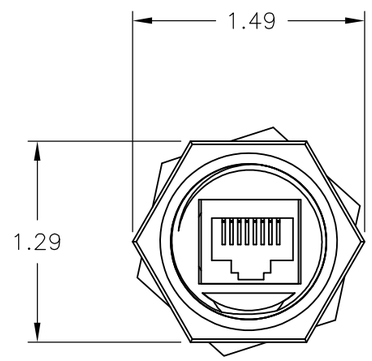

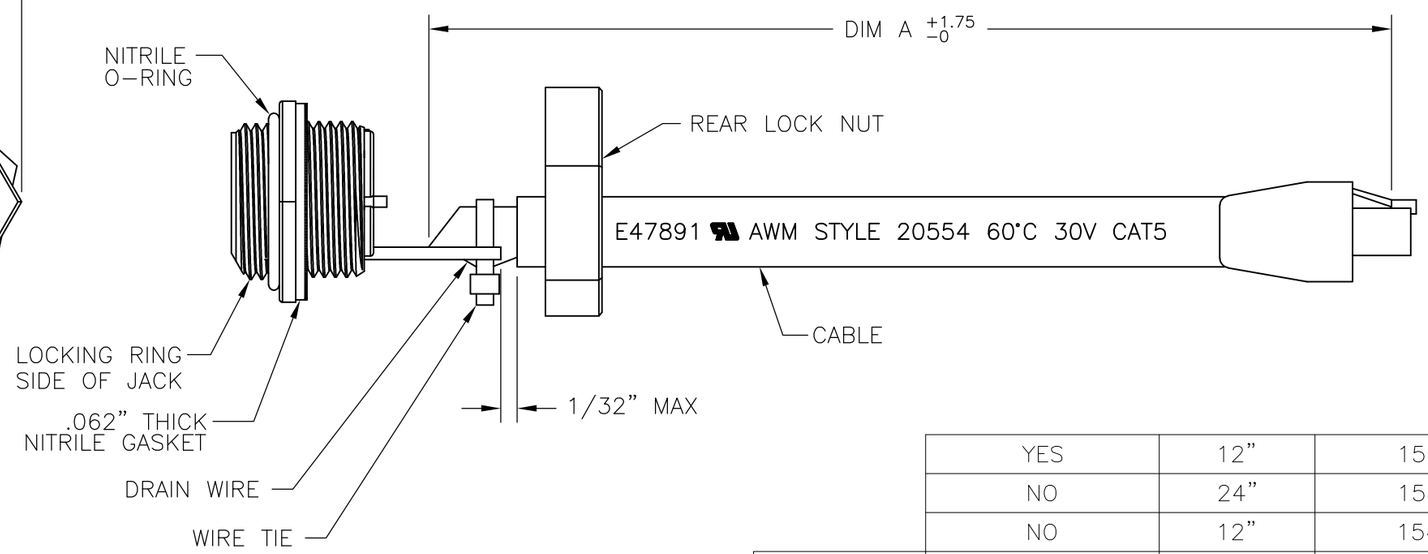

WIRE LIST
PIN (SAME FOR BOTH CONNECTORS)
1 WHT/BLU
2 BLUE
3 WHT/ORG
4 GREEN
5 WHT/GRN
6 ORG
7 WHT/BROWN
8 BROWN
GRND

	CABLE TIE	DIM A	PART NUMBER
	YES	12"	1546414-6
	NO	24"	1546414-5
	NO	12"	1546414-4
SUPERSEDED	YES	12"	1546414-3
SUPERSEDED	NO	24"	1546414-2
SUPERSEDED	NO	12"	1546414-1

MATERIALS:
BOOT-HOOD: POLYOLEFIN, BLACK.
JACK: CAT 5E PCB.
LOCKNUT: ABS, 10% GLASS FILLED, BLACK.
PANEL MOUNT HOUSING: CLCOLAC
CABLE: 26 AWG 8 CONDUCTOR BLACK PVC JACKET.

THIS DRAWING IS A CONTROLLED DOCUMENT.

DIMENSIONS: INCHES

TOLERANCES UNLESS OTHERWISE SPECIFIED:
0 PLC ± -
1 PLC ± -
2 PLC ± .02
3 PLC ± .005
4 PLC ± -
ANGLES ± 2°

MATERIAL -
FINISH -

DWN S SCHLEGEL 09OCT2002
CHK H WAKEEM 10/9/02
APVD H WAKEEM 10/9/02
PRODUCT SPEC —
APPLICATION SPEC —
WEIGHT —

TE Connectivity

NAME
ETHERNET PANEL MOUNT RECEPTACLE
RJ-45 BULKHEAD PASS THROUGH
WITH PATCH CORD

SIZE	CAGE CODE	DRAWING NO	RESTRICTED TO
A3	00779	C-1546414	—

CUSTOMER DRAWING | SCALE NTS | SHEET 1 OF 1 | REV F2

1470-19 (3/11)