THIS DRAWING IS UNPUBLISHED. RELEASED FOR PUBLICATION - ,- .
© COPYRIGHT - BY TYCO ELECTRONICS CORPORATION. ALL RIGHTS RESERVED.

LOC	DIST
AD	00

REVISIONS

P	LTR	DESCRIPTION	DATE	DWN	APVD
	G1	REVISED PER ECO-08-008082	03APR08	HMR	MS

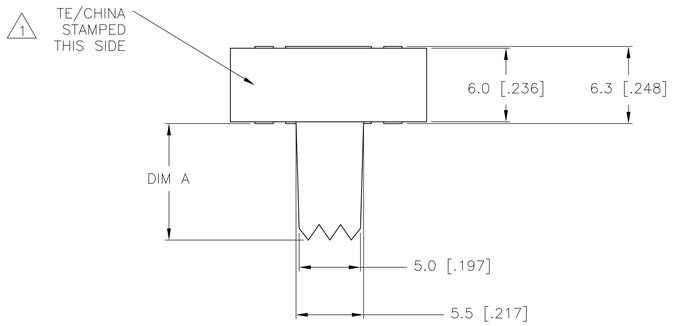

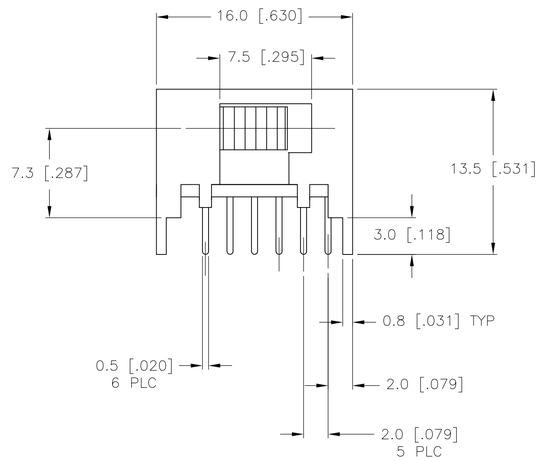

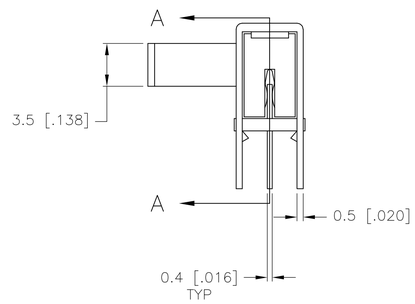

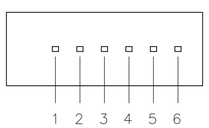

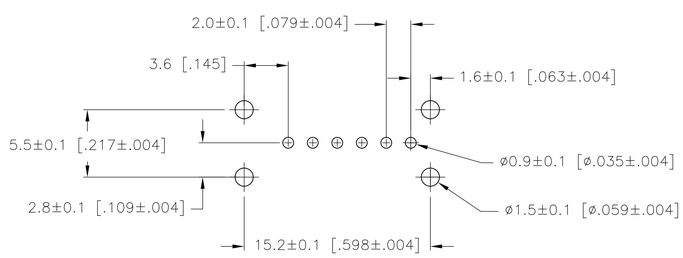

RECOMMENDED
P.C. BOARD LAYOUT

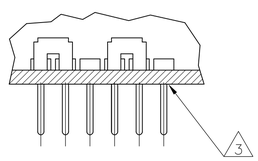

SECTION A–A

SPECIFICATIONS
MAKE–BEFORE–BREAK

MATERIALS:
ACTUATOR– POM, UL94HB BLACK
TERMINAL BOARD– PHENOLIC LAMINATED SHEET, UL94HB, NATURAL
FRAME– STEEL, NICKEL PLATE
TERMINAL/FIXED CONTACT– COPPER ALLOY, GOLD OR SILVER OVER NICKEL PLATE
MOVING CONTACT– COPPER ALLOY, GOLD OR SILVER OVER NICKLE PLATE
DETENT BALL– STEEL
COIL SPRING– GALVANIZED SPRING WIRE
SEAL– EPOXY

ELECTRICAL:
CONTACT RATING– .4VA@20VDC OR PEAK AC (GOLD); 300mA@125V AC (SILVER)
INITIAL CONTACT RESISTANCE– 30 milliohm max.
FINAL CONTACT RESISTANCE– 100 milliohm max. (AFTER TEST)
INSULTAION RESISTANCE– 1,000 Megohms min.
DIELECTRIC STRENGTH– 500V RMS@SEA LEVEL
LIFE EXPECTANCY– 15,000 CYCLES MIN.

MECHANICAL:
ACTUATION FORCE– 600+/–300 GRAMS
TRAVEL– 2.0 +/–.50 (.079 +/–.020)

ENVIRONMENTAL:
OPERATING TEMPERATURE– –20 TO +85 DEGREES C
STORAGE TEMPERATURE– –40 TO +100 DEGREES C
RESISTANCE TO SOLDER HEAT PER 109–202, CONDITION B
SOLDERABILITY PER EIA–364–52, CLASS 2, CATEGORY 1, 95% MIN COVERAGE

NOTES:

1. MARK PER 202–37 SPECIFICATION, tyco/CHINA MINIMUM REQUIREMENT
2. ALL MATERIALS AND FINISHES SHALL COMPLY WITH EU DIRECTIVE 2002/95/EC OF 27JAN2003 (ROHS)
3. ANTI SOLDER WICK SEAL AT TERMINAL TO BOARD INTERFACE
4. ALL PERFORMANCE TESTING WAS DONE IN ACCORDANCE TO TE SPECIFICATION 102–2469

1571630–3	MSS2250RG04	GOLD	9.5(.374)	2 TO 1 5 TO 4		2 TO 3 5 TO 6
1571630–2	MSS2250R04	SILVER	9.5(.374)	2 TO 1 5 TO 4		2 TO 3 5 TO 6
1571630–1	MSS2250RSA04	SILVER	3.2(.126)	2 TO 1 5 TO 4		2 TO 3 5 TO 6
TE PART NO.	T&B PART NO.	PLATING	A	123456		123456

TERMINALS CONNECTED WHEN SLIDE IS IN POSITION SHOWN.

THIS DRAWING IS A CONTROLLED DOCUMENT.

DIMENSIONS: mm

TOLERANCES UNLESS OTHERWISE SPECIFIED:
0 PLC ± –
1 PLC ± 0.3 [.012]
2 PLC ± –
3 PLC ± –
4 PLC ± –
ANGLES ± –

MATERIAL –
FINISH –

DWN R BROWN 20DEC05
CHK M SARVER 20DEC05
APVD M SARVER 20DEC05
PRODUCT SPEC —
APPLICATION SPEC —
WEIGHT —

Tyco Electronics
Tyco Electronics Corporation
Harrisburg, PA 17105–3608

NAME SLIDE SWITCH, MSS 2250R SERIES, DP–DT, RIGHT ANGLE

SIZE	CAGE CODE	DRAWING NO	RESTRICTED TO
A1	00779	C–1571630	—

CUSTOMER DRAWING SCALE 4:1 SHEET 1 OF 1 REV G1