**JUMO GmbH & Co. KG**
Delivery address: Mackenrodtstraße 14, 36039 Fulda, Germany
Postal address: 36035 Fulda, Germany
Phone: +49 661 6003-0
Fax: +49 661 6003-607
E-mail: mail@jumo.net
Internet: www.jumo.net

**JUMO Instrument Co. Ltd.**
JUMO House
Temple Bank, Riverway
Harlow - Essex CM20 2DY, UK
Phone: +44 1279 63 55 33
Fax: +44 1279 63 52 62
E-mail: sales@jumo.co.uk
Internet: www.jumo.co.uk

**JUMO Process Control, Inc.**
8 Technology Boulevard
Canastota, NY 13032, USA
Phone: 315-697-JUMO
1-800-554-JUMO
Fax: 315-697-5867
E-mail: info@jumo.us
Internet: www.jumo.us



# JUMO heatTHERM-AT and heatTHERM-DR

## Type 603070, design as add-on or room thermostat

Type 603070/0170 (TR/STB)

Type 603070/0001 (TR)

Type 603070/ 0002 (TW)

Type 603070/0002 (TW)

## Particularities

- PUSH IN-Connection technology - **reduced installation time by 50%**
- Stable switch point position due to ambient temperature compensation (serial)
- Max. contact rating 16 A, 230 V
- Tested as per DIN EN 14597
- Service life, at least 250,000 switching cycles for TR and TW
- Switch point deviation during the entire service life of max. ± 5%
- Protection class max. IP 54
- UL approval (extra code 061)

## Brief description

High application flexibility and latest connection technology are the essential equipment features of this new thermostat series.

The thermostat case is suitable for all common installation types such as wall mounting, immersion sleeve and contact fastening. It can be used universally and reduces the variant range because different mounting types must no longer be taken into account.

The heatTHERM-DR (design 7+8) type is a specific variation with a special housing bottom section for top hat rail or wall mounting. This allows an easy mounting on support rails TH35 as per DIN EN 60715 (e.g. in switch cabinets). This variant considerably reduces the mounting time. The flue gas temperature monitor heatTHERM-AT locks the gas/oil vessel connected in parallel with the wood vessel to a chimney.

For these worldwide innovative add-on thermostats with "Push-In®" terminal technology, the connection wires are only inserted into the terminal point up to the stop - done! No tool is required for connecting the wire or braid with ferrule and the wiring will become more safely. In this manner, the costs and time required for connection is considerably reduced compared that of the conventi-onal screw terminal.

The "Push-In®" terminal technology allows direct switching of loads up to 16A at 230V AC. The installation costs can be reduced further because a contactor is no longer required.

The maintenance costs are reduced by the small distance of approx.10K between switch-off point and re-switch-on point of the safety temperature limiter.

Available are temperature controllers (TR), temperature monitors (TW), safety temperature monitors (STW), safety temperature limiters (STB) as single or double thermostats and flue gas temperature monitors (ATW).

Approval as per DIN EN 14 597, DGRL and UL indicate the high quality standards valid for this product series.

## Approval/approval marks (see Technical Data)

DIN Geprüft

DGRL 97/23/EG

c UL us LISTED
Design 5+6*

c UL us
Design 7+8*

*only with extra code 061

2010-06-17/00485235

**JUMO GmbH & Co. KG**
Delivery address: Mackenrodtstraße 14, 36039 Fulda, Germany
Postal address: 36035 Fulda, Germany
Phone: +49 661 6003-0
Fax: +49 661 6003-607
E-mail: mail@jumo.net
Internet: www.jumo.net

**JUMO Instrument Co. Ltd.**
JUMO House
Temple Bank, Riverway
Harlow - Essex CM20 2DY, UK
Phone: +44 1279 63 55 33
Fax: +44 1279 63 52 62
E-mail: sales@jumo.co.uk
Internet: www.jumo.co.uk

**JUMO Process Control, Inc.**
8 Technology Boulevard
Canastota, NY 13032, USA
Phone: 315-697-JUMO
1-800-554-JUMO
Fax: 315-697-5867
E-mail: info@jumo.us
Internet: www.jumo.us



# Technical Data

## Switching function

| | |
|---|---|
| **Temperature controller TR / temperature monitor TW** | If the temperature exceeds the set point value set on the temperature probe, the micro switch will be tripped via the transmission mechanics and the current circuit opened or closed. The micro switch is reset to its original status once the set point value set is gone below (by the hysteresis). |
| **Safety temperature monitor STW** | If the temperature exceeds the set point value set on the temperature probe, the snap switch will be tripped and the current circuit opened or closed. The snap switch is reset to its original status once the set point value set is gone below (by the hysteresis).<br>If the measuring system is destroyed, i.e. if the expansion fluid emerges, the pressure in the diaphragm drops and permanently opens the current circuit.<br>If the probe has cooled down to a temperature below approx. -20°C, the same current circuit opens, however, automatically closes again, when the temperature rises. |
| **Safety temperature limiter STB** | If the temperature exceeds the switching point set on the temperature probe, the snap switch is tripped, the current circuit opened or closed and the snap switch mechanically locked.<br>The snap switch can be manually unlocked again once the switching point temperature has gone below by approx. 10K.<br>If the measuring system is destroyed, i.e. if the expansion fluid emerges, the pressure in the diaphragm drops and permanently opens the control current circuit. Unlocking is no longer possible.<br>If the probe has cooled down to a temperature below approx. -20°C, the control current circuit opens, however, automatically closes again, when the temperature rises. |

## Temperature compensation

When the ambient temperature on the switch head and the long-distance line deviates from the calibration ambient temperature +22°C, a switch point offset occurs. This switching point offset is minimized due to the temperature compensation.

**JUMO GmbH & Co. KG**
Delivery address: Mackenrodtstraße 14, 36039 Fulda, Germany
Postal address: 36035 Fulda, Germany
Phone: +49 661 6003-0
Fax: +49 661 6003-607
E-mail: mail@jumo.net
Internet: www.jumo.net

**JUMO Instrument Co. Ltd.**
JUMO House
Temple Bank, Riverway
Harlow - Essex CM20 2DY, UK
Phone: +44 1279 63 55 33
Fax: +44 1279 63 52 62
E-mail: sales@jumo.co.uk
Internet: www.jumo.co.uk

**JUMO Process Control, Inc.**
8 Technology Boulevard
Canastota, NY 13032, USA
Phone: 315-697-JUMO
1-800-554-JUMO
Fax: 315-697-5867
E-mail: info@jumo.us
Internet: www.jumo.us



# Technical Data

## Case

| | Design 5 + 6 | Design 7 + 8 |
|---|---|---|
| **Case** | Housing bottom section: | PA (inforced) |
| | Color: | Silver gray RAL 7001 (for TZ 061 black) |
| | Case lid: ABS with inspection window (PMMA)<br>Color: cobalt blue RAL 5013 (for TZ 061 light gray, RAL 7035) | |
| **Set point value setting** | | |
| TR | The switching point can be externally adjusted by means of the rotary knob | - - |
| TW, STW, STB, ATW | The switching point can be adjusted by means of a screwdriver once the case lid has been removed, check the set switching point through the inspection glass. | Switching point can adjusted by means of a screw-driver |
| **Protection type** | IP 54 as per EN 60 529 | IP 20 as per EN 60 529 |
| **Cable inlet** | Cable screw connection M20 x 1.5, for cable ∅ 6-12 mm | Cable connection directly on PUSH IN terminals |
| **Long-distance line** | ∅ 1.5 mm - min. bending radius of the long-distance line 5 mm - material: Copper (Cu) or stainless steel (CrNi, 1.4301) | |
| **Case fastening** | Pipe mounting with clamping belt for pipe diameter 15-100 mm, sheath mounting, wall mounting | Wall mounting, top hat rail installation TH35 as per DIN EN 60715 |
| **Weight** | approx. 0.2 kg | |

## Electrical data

| | | |
|---|---|---|
| **Electric contact** | Snap switch with single-pole change-over contact | |
| **Contact rating** | TR / TW / STW / ATW | STB |
| | On the N/C contact (Contact deck 1-2):<br>AC 230 V +10%, 16 (2.5) A, cos φ = 1 (0.6),<br>DC 230 V +10%, 0.25 A<br>On the N/O contact (Contact deck 1-4):<br>AC 230 V +10%, 6,3 (2.5) A, cos φ = 1 (0.6),<br>DC 230 V +10%, 0.25 A | On the N/C contact (Contact deck 1-2):<br>AC 230 V +10%, 16 (2.5) A, cos φ = 1 (0.6),<br>DC 230 V +10%, 0.25 A<br>On the signal contact (Contact deck 1-4):<br>AC 230 V +10%, 2 (04) A, cos φ = 1 (0.6),<br>DC 230 V +10%, 0.25 A |
| **Electrical connection** | PUSH IN contact (plug-type terminal)<br>„Push-In®“-terminal technology: patented connection technology of Weidmüller GmbH & Co. KG, Detmold | |
| **Connection cross section** | 0.75...2.5 $mm^2$ fine wired (single-wire, fine wired with ferrule) | |
| **Switching reliability** | To ensure a high switching reliability, we recommend a minimum load of:<br>AC / DC = 24 V, 100 mA with silver contacts<br>AC / DC = 10 V, 5 mA with gold-plated contacts (TZ 702) | |

**JUMO GmbH & Co. KG**
Delivery address: Mackenrodtstraße 14, 36039 Fulda, Germany
Postal address: 36035 Fulda, Germany
Phone: +49 661 6003-0
Fax: +49 661 6003-607
E-mail: mail@jumo.net
Internet: www.jumo.net

**JUMO Instrument Co. Ltd.**
JUMO House
Temple Bank, Riverway
Harlow - Essex CM20 2DY, UK
Phone: +44 1279 63 55 33
Fax: +44 1279 63 52 62
E-mail: sales@jumo.co.uk
Internet: www.jumo.co.uk

**JUMO Process Control, Inc.**
8 Technology Boulevard
Canastota, NY 13032, USA
Phone: 315-697-JUMO
1-800-554-JUMO
Fax: 315-697-5867
E-mail: info@jumo.us
Internet: www.jumo.us



## Operating data

| | | | | | |
|---|---|---|---|---|---|
| **Switching point accuracy** | TR, TW | STW, STB with a setting range of: | | | |
| | | +20°C...+80°C | | +70°C...+130°C | |
| | Hysteresis 2.5% | in the "first half“ (+20°C...+50°C) | in the "second half“ (+50°C...+80°C) | in the "first half“ (+70°C...+100°C) | in the "second half“ (+100°C...+130°C) |
| | In the upper third of the scale ± 3%, at scale beginning ± 6% | +0/-8 K | +0/-5 K | +0/-12 K | +0/-5 K |
| **Temperature compensation** | When the ambient temperature on the switch head and the long-distance line deviates from the calibration ambient temperature +22°C, a switch point offset of approx. -0.1 K/K occurs (switch point change referring to the ambient temperature change, measured at limit value +120°C permanently set and long-distance line length 2000 mm).<br>This switching point offset is minimized due to the series temperature compensation. | | | | |
| **Limit value temperatures** | for transport and storage: | -30°C...+50°C | | | |
| | during use: | max. +80°C, for TZ 061 UL approval max. +65°C (design 7 max. 55°C; design 6+8 max. +50°C) | | | |
| | for pipe mounting: | max. pipe temperature +120°C | | | |
| **Rated position** | as per DIN 16257, NL 0...NL 90 (different rated positions on request) | | | | |

## Approval/approval marks

| **Approval marks** | Inspection authority | Inspection basics | valid for |
|---|---|---|---|
| DIN | DIN CERTCO | DIN EN 14597 | TR 119107, TW 119207, STW (STB) 119307, STB 119407, ATW 1218 |
| DGRL | TÜV Süd (German Technical Inspection Agency) | Directive governing pressure systems 97/23/EC | STW and STB |
| UL | UL Germany | UL 873 | E 66358 |

## Wiring diagrams

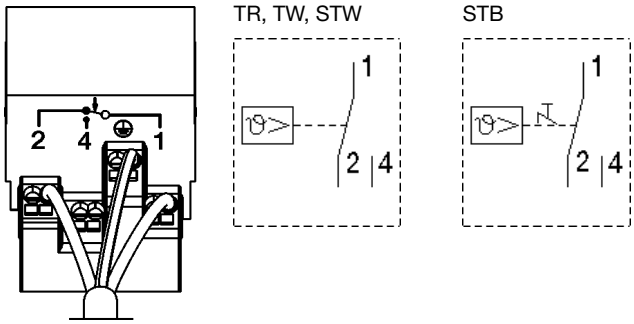

**JUMO GmbH & Co. KG**
Delivery address: Mackenrodtstraße 14, 36039 Fulda, Germany
Postal address: 36035 Fulda, Germany
Phone: +49 661 6003-0
Fax: +49 661 6003-607
E-mail: mail@jumo.net
Internet: www.jumo.net

**JUMO Instrument Co. Ltd.**
JUMO House
Temple Bank, Riverway
Harlow - Essex CM20 2DY, UK
Phone: +44 1279 63 55 33
Fax: +44 1279 63 52 62
E-mail: sales@jumo.co.uk
Internet: www.jumo.co.uk

**JUMO Process Control, Inc.**
8 Technology Boulevard
Canastota, NY 13032, USA
Phone: 315-697-JUMO
1-800-554-JUMO
Fax: 315-697-5867
E-mail: info@jumo.us
Internet: www.jumo.us



# Devices in stock: JUMO heatTHERM-AT

## Temperature controller TR, design 5

**Type 603070/0001**[a]

- Protection class IP 54
- Compensation of the ambient temperature
- Individual limitation of the control range

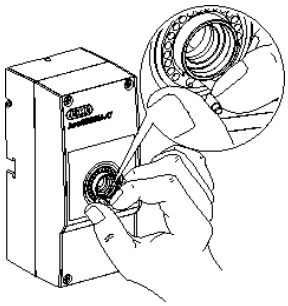

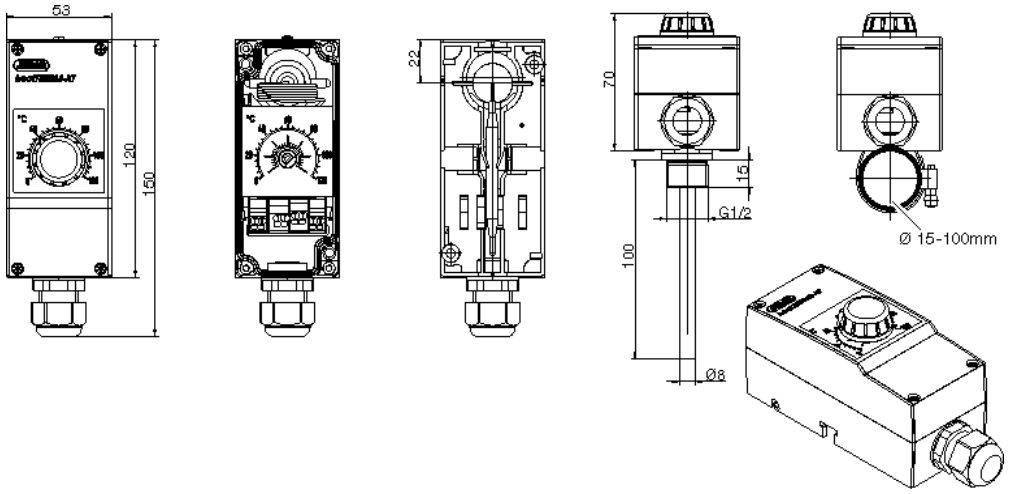


| Part No. | Type | Control range °C | Long-distance line mm | Probe–∅ (d) x L mm | Hysteresis | Process connection |
|---|---|---|---|---|---|---|
| 60/60003185 | heatTHERM-AT/0001 | 0...+120 | 2000 | 6 x 87 | approx. 3K | with internal long-distance line and contact probe |
| 60/60003186 | | | | | | Sheath U 4, brass nickel-plated |

[a] Further design versions (control range, hysteresis, process connection) on request - Minimum order quantity 100 pieces. Sheaths, page 15.

## Temperature monitor TW

**Type 603070/0002**[a]

- Protection class IP 54
- Compensation of the ambient temperature
- Switching value control through inspection windows in the housing lid

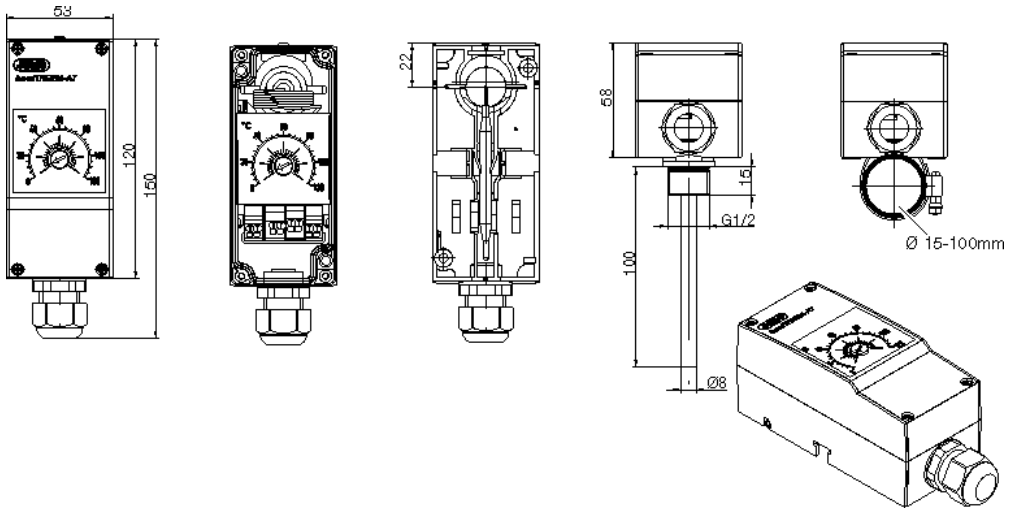


| Part No. | Type | Control range °C | Long-distance line mm | Probe–∅ (d) x L mm | Hysteresis | Process connection |
|---|---|---|---|---|---|---|
| 60/60003187 | heatTHERM-AT/0002 | 0...+120 | 2000 | 6 x 87 | approx. 3K | with internal long-distance line and contact probe |
| 60/60003188 | | | | | | Sheath U 4, brass nickel-plated |

[a] Further design versions (control range, hysteresis, process connection) on request - Minimum order quantity 100 pieces. Sheaths, page 15.

**JUMO GmbH & Co. KG**
Delivery address: Mackenrodtstraße 14, 36039 Fulda, Germany
Postal address: 36035 Fulda, Germany
Phone: +49 661 6003-0
Fax: +49 661 6003-607
E-mail: mail@jumo.net
Internet: www.jumo.net

**JUMO Instrument Co. Ltd.**
JUMO House
Temple Bank, Riverway
Harlow - Essex CM20 2DY, UK
Phone: +44 1279 63 55 33
Fax: +44 1279 63 52 62
E-mail: sales@jumo.co.uk
Internet: www.jumo.co.uk

**JUMO Process Control, Inc.**
8 Technology Boulevard
Canastota, NY 13032, USA
Phone: 315-697-JUMO
1-800-554-JUMO
Fax: 315-697-5867
E-mail: info@jumo.us
Internet: www.jumo.us



# Devices in stock: JUMO heatTHERM-AT

## Safety temperature monitor STW, design 5

**Type 603070/0020**[a]

- Protection class IP 54
- Switching value control through inspection windows in the housing lid
- Compensation of the ambient temperature
- Later lead sealing of the case lid is possible
- Capillary break protection

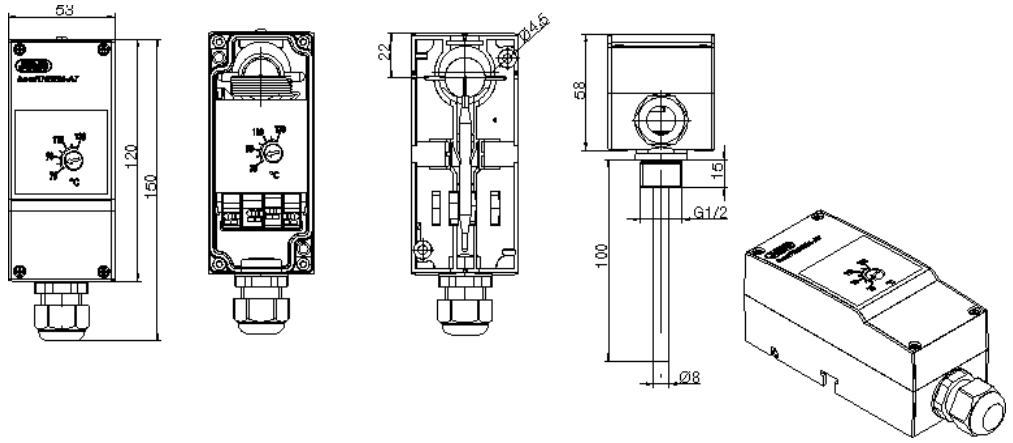


| Part No. | Type | Control range °C | Long-distance line mm | Probe–Ø (d) x L mm | Hysteresis | Process connection |
|---|---|---|---|---|---|---|
| 60/60003229 | heatTHERM-AT/0020 | +20...+80 | 2000 | 6 x 60 | approx. 10K | with internal long-distance line and contact probe |
| 60/60003189 | | +70...+130 | | | | Sheath U 4, brass nickel-plated |

[a] Further design versions (control range, hysteresis, process connection) on request - Minimum order quantity 100 pieces. Sheaths, page 15.

## Safety temperature limiter STB, design 5

**Type 603070/0070**[a]

- Protection class IP 54
- Switching value control through inspection windows in the housing lid
- External acknowledgement of the switching point is possible
- Compensation of the ambient temperature
- Later lead sealing of the case lid is possible
- Capillary break protection

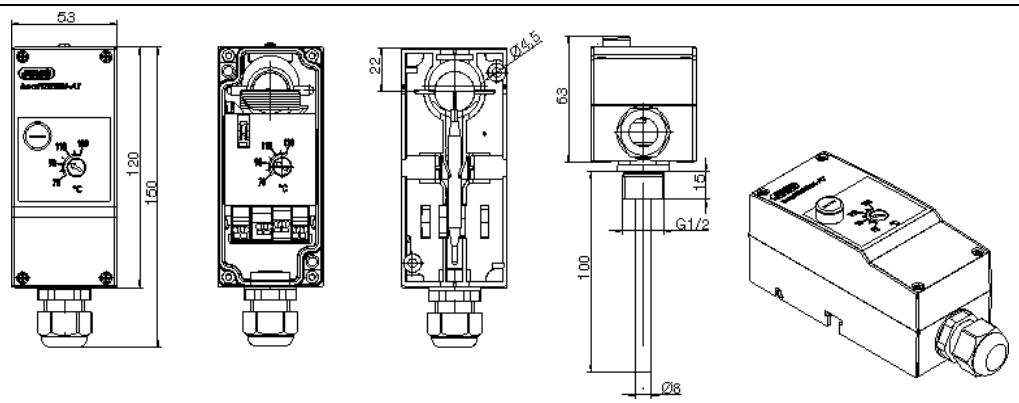


| Part No. | Type | Control range °C | Long-distance line mm | Probe–Ø (d) x L mm | Hysteresis | Process connection |
|---|---|---|---|---|---|---|
| 60/60003230 | heatTHERM-AT/0070 | +70...+130 | 2000 | 6 x 60 | approx. 10K | with internal long-distance line and contact probe |
| 60/60003190 | | | | | | Sheath U 4, brass nickel-plated |

[a] Further design versions (control range, hysteresis, process connection) on request - Minimum order quantity 100 pieces. Sheaths, page 15.

**JUMO GmbH & Co. KG**
Delivery address: Mackenrodtstraße 14, 36039 Fulda, Germany
Postal address: 36035 Fulda, Germany
Phone: +49 661 6003-0
Fax: +49 661 6003-607
E-mail: mail@jumo.net
Internet: www.jumo.net

**JUMO Instrument Co. Ltd.**
JUMO House
Temple Bank, Riverway
Harlow - Essex CM20 2DY, UK
Phone: +44 1279 63 55 33
Fax: +44 1279 63 52 62
E-mail: sales@jumo.co.uk
Internet: www.jumo.co.uk

**JUMO Process Control, Inc.**
8 Technology Boulevard
Canastota, NY 13032, USA
Phone: 315-697-JUMO
1-800-554-JUMO
Fax: 315-697-5867
E-mail: info@jumo.us
Internet: www.jumo.us



# Devices in stock: JUMO heatTHERM-AT

## Room thermostat temperature controller TR, design 6

**Type 603070/0001**[a]

- Protection class IP 54
- Wall mounting
- Individual limitation of the control range

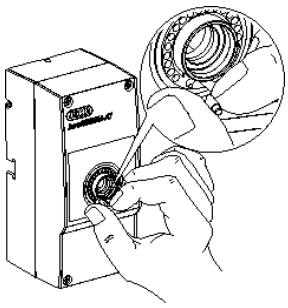

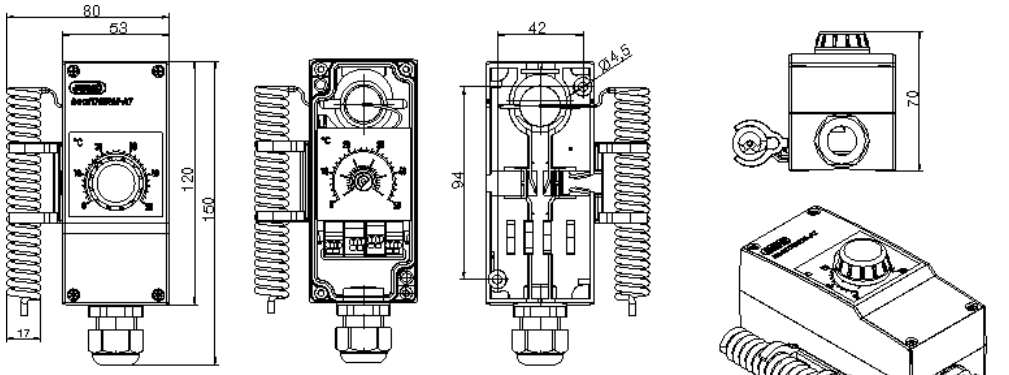


| Part No. | Type | Control range °C | Long-distance line mm | Probe–∅ (d) x L mm | Hysteresis | Process connection |
|---|---|---|---|---|---|---|
| 60/60003191 | heatTHERM-AT/0001 | -10...+40 | - - | - - | 1.5 - 2K | Spiral probe |
| 60/60003192 | | 0...+50 | | | | |

[a] Further design versions (control range, hysteresis, process connection) on request - Minimum order quantity 100 pieces. Sheaths, page 15.

## Room thermostat temperature monitor TW, design 6

**Type 603070/0002**[a]

- Protection class IP 54
- Wall mounting
- Switching value control through inspection windows in the housing lid

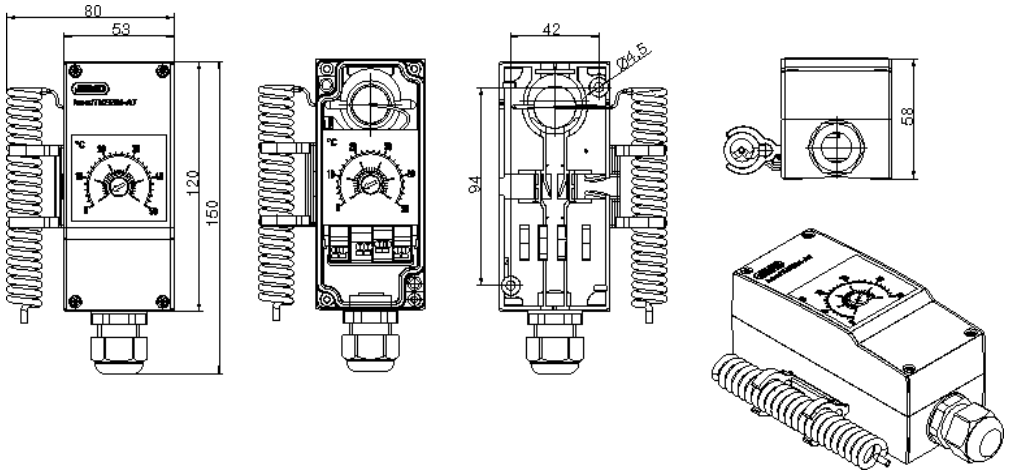


| Part No. | Type | Control range °C | Long-distance line mm | Probe–∅ (d) x L mm | Hysteresis | Process connection |
|---|---|---|---|---|---|---|
| 60/60003193 | heatTHERM-AT/0002 | -10...+40 | - - | - - | 1.5 - 2K | Spiral probe |
| 60/60003194 | | 0...+50 | | | | |

[a] Further design versions (control range, hysteresis, process connection) on request - Minimum order quantity 100 pieces. Sheaths, page 15.

**JUMO GmbH & Co. KG**
Delivery address: Mackenrodtstraße 14, 36039 Fulda, Germany
Postal address: 36035 Fulda, Germany
Phone: +49 661 6003-0
Fax: +49 661 6003-607
E-mail: mail@jumo.net
Internet: www.jumo.net

**JUMO Instrument Co. Ltd.**
JUMO House
Temple Bank, Riverway
Harlow - Essex CM20 2DY, UK
Phone: +44 1279 63 55 33
Fax: +44 1279 63 52 62
E-mail: sales@jumo.co.uk
Internet: www.jumo.co.uk

**JUMO Process Control, Inc.**
8 Technology Boulevard
Canastota, NY 13032, USA
Phone: 315-697-JUMO
1-800-554-JUMO
Fax: 315-697-5867
E-mail: info@jumo.us
Internet: www.jumo.us



# Devices in stock: JUMO heatTHERM-AT

## Temperature controller/safety temperature monitor TR/STW, design 5

**Type 603070/0120**[a]

- Protection class IP 54
- Switching value control through inspection windows in the housing lid
- Compensation of the ambient temperature
- Capillary break protection for STW

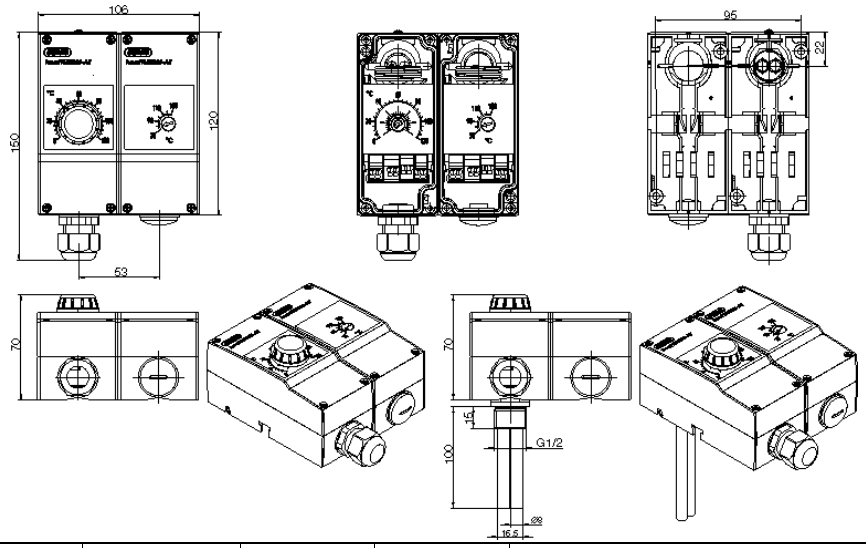


| Part No. | Type | Control range °C | Long-distance line mm | Probe–∅ (d) x L mm | Hysteresis | Process connection |
|---|---|---|---|---|---|---|
| 60/60003195 | heatTHERM-AT/0120 | TR: 0...+120 | 2000 | 6 x 87 | approx. 3K | with internal long-distance line and contact probe |
| | | STW: 70...+130 | | 6 x 60 | approx. 10K | |
| 60/60003231 | | TR: 0...+120 | | 6 x 87 | approx. 3K | Sheath; brass nickel-plated |
| | | STW: 70...+130 | | 6 x 60 | approx. 10K | |

[a] Further design versions (control range, hysteresis, process connection) on request - Minimum order quantity 100 pieces. Sheaths, page 15.

## Temperature controller/safety temperature limiter TR/STB, design 5

**Type 603070/0170**[a]

- Protection class IP 54
- Switching value control through inspection windows in the housing lid
- Compensation of the ambient temperature
- Capillary break protection for STW

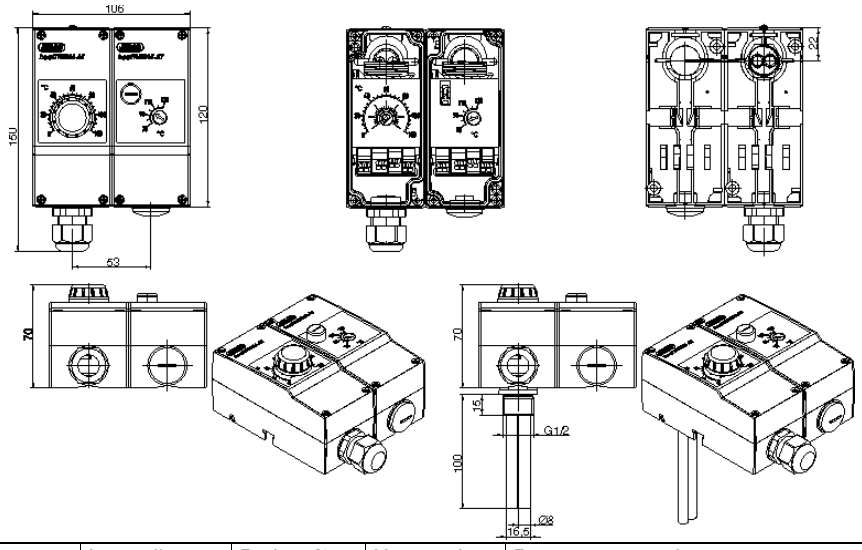


| Part No. | Type | Control range °C | Long-distance line mm | Probe–∅ (d) x L mm | Hysteresis | Process connection |
|---|---|---|---|---|---|---|
| 60/60003196 | heatTHERM-AT/0170 | TR: 0...+120 | 2000 | 6 x 87 | approx. 3K | with internal long-distance line and contact probe |
| | | STB: 70...+130 | | 6 x 60 | approx. 10K | |
| 60/60003232 | | TR: 0...+120 | | 6 x 87 | approx. 3K | Sheath; brass nickel-plated |
| | | STB: 70...+130 | | 6 x 60 | approx. 10K | |

[a] Further design versions (control range, hysteresis, process connection) on request - Minimum order quantity 100 pieces. Sheaths, page 15.

**JUMO GmbH & Co. KG**
Delivery address: Mackenrodtstraße 14, 36039 Fulda, Germany
Postal address: 36035 Fulda, Germany
Phone: +49 661 6003-0
Fax: +49 661 6003-607
E-mail: mail@jumo.net
Internet: www.jumo.net

**JUMO Instrument Co. Ltd.**
JUMO House
Temple Bank, Riverway
Harlow - Essex CM20 2DY, UK
Phone: +44 1279 63 55 33
Fax: +44 1279 63 52 62
E-mail: sales@jumo.co.uk
Internet: www.jumo.co.uk

**JUMO Process Control, Inc.**
8 Technology Boulevard
Canastota, NY 13032, USA
Phone: 315-697-JUMO
1-800-554-JUMO
Fax: 315-697-5867
E-mail: info@jumo.us
Internet: www.jumo.us



# Devices in stock: JUMO heatTHERM-AT

## Room thermostat temperature monitor / temperature monitor TW/TW, design 6

**Type 603070/0202**[a]

- Protection class IP 54
- Wall mounting
- Switching value control through inspection windows in the housing lid

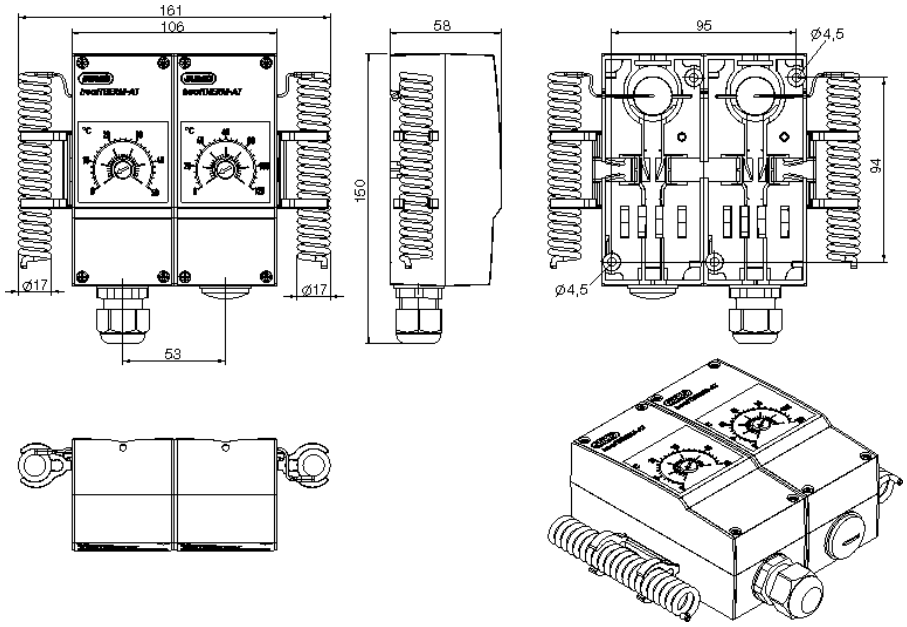


| Part No. | Type | Control range °C | Long-distance line mm | Probe–∅ (d) x L mm | Hysteresis | Process connection |
|---|---|---|---|---|---|---|
| 60/60003212 | heatTHERM-AT/0202 | -10...+40 | - - | - - | 1.5 - 2K | Spiral probe |
| 60/60003213 | | 0...+50 | | | | |

[a] Further design versions (control range, hysteresis, process connection) on request - Minimum order quantity 100 pieces. Sheaths, page 15.

## Flue gas temperature monitor with flange sleeve, design 5

**Type 603070/0020**[a]

- Switching value control through inspection windows in the housing lid
- Compensation of the ambient temperature
- max. admissible probe tem-pera-ture +400°C
- Approval as ATW with capillary break protection as per DIN 14597
- Time constant t0.632 ≤ 45 sec in flue gas

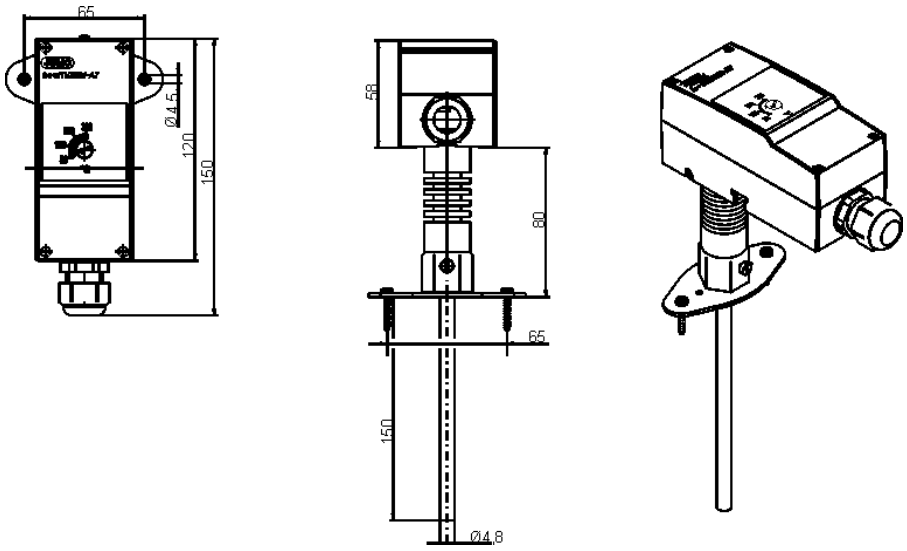


| Part No. | Type | Control range °C | Long-distance line mm | Probe–∅ (d) x L mm | Hysteresis | Process connection |
|---|---|---|---|---|---|---|
| 60/60003307 | heatTHERM-AT/0002 | +40...+230 | - - | - - | approx. 15K | Sheath with flange and intermediate piece |

[a] Further design versions (control range, hysteresis, process connection) on request - Minimum order quantity 100 pieces. Sheaths, page 15.

**JUMO GmbH & Co. KG**
Delivery address: Mackenrodtstraße 14, 36039 Fulda, Germany
Postal address: 36035 Fulda, Germany
Phone: +49 661 6003-0
Fax: +49 661 6003-607
E-mail: mail@jumo.net
Internet: www.jumo.net

**JUMO Instrument Co. Ltd.**
JUMO House
Temple Bank, Riverway
Harlow - Essex CM20 2DY, UK
Phone: +44 1279 63 55 33
Fax: +44 1279 63 52 62
E-mail: sales@jumo.co.uk
Internet: www.jumo.co.uk

**JUMO Process Control, Inc.**
8 Technology Boulevard
Canastota, NY 13032, USA
Phone: 315-697-JUMO
1-800-554-JUMO
Fax: 315-697-5867
E-mail: info@jumo.us
Internet: www.jumo.us



# Devices in stock: JUMO heatTHERM-DR

## Thermostat for top hat rail installation TH35, as per DIN EN 60715, design 7

**Type 603070/. . . .-**[a]

- Protection class IP 20
- Top hat rail installation TH35
- Installation and user friendly

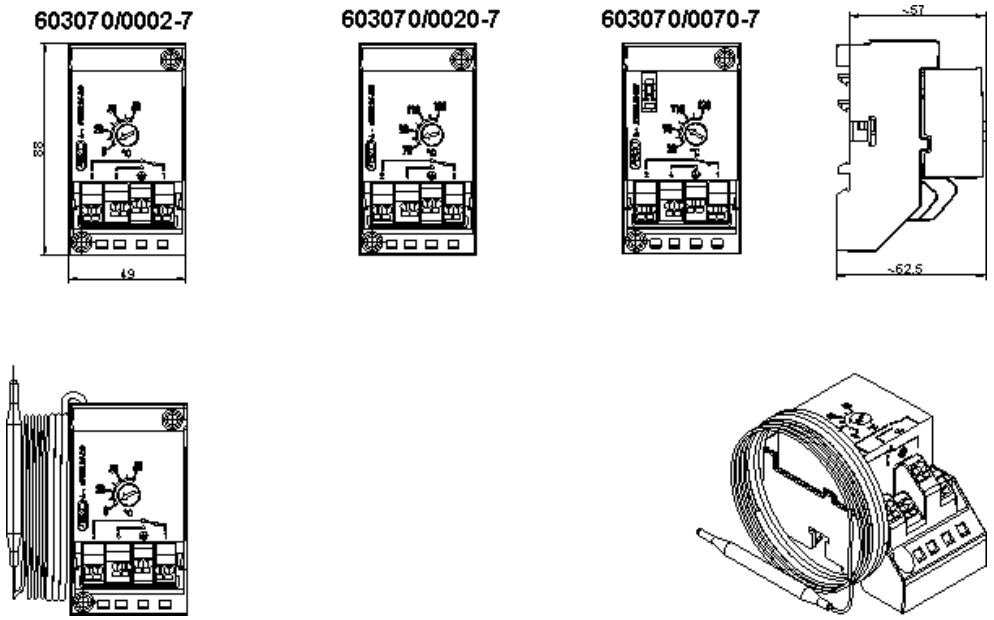


| Part No. | Type | Control range °C | Long-distance line mm | Probe–∅ (d) x L mm | Hysteresis | Process connection |
|---|---|---|---|---|---|---|
| **Temperature monitor TW** | | | | | | |
| 60/60003283 | 603070/0002 | 0...+120 | 2000 | 6 x 87 | approx. 3K | with long-distance line and contact probe |
| 60/60003284 | 603070/0002 | 0...+200 | | 6 x 78 | approx. 5K | |
| 60/60003285 | 603070/0002 | +50...+300 | | 6 x 66 | approx. 6K | |
| | | | | | | |
| **Safety temperature monitor STW** | | | | | | |
| 60/60003286 | 603070/0020 | +70...+130 | 2000 | 6 x 60 | approx. 10K | with long-distance line and contact probe |
| | | | | | | |
| **Safety temperature limiter STB** | | | | | Unlocking difference | |
| 60/60003287 | 603070/0070 | +70...+130 | 2000 | 6 x 60 | approx. 10K | with long-distance line and contact probe |
| 60/60003299 | 603070/0070 | +20...+150 | | 6 x 63 | | |
| 60/60003300 | 603070/0070 | +50...+300 | | 6 x 63 | | |

[a] Further design versions (control range, hysteresis, process connection) on request - Minimum order quantity 100 pieces. Sheaths, page 15.

**JUMO GmbH & Co. KG**
Delivery address: Mackenrodtstraße 14, 36039 Fulda, Germany
Postal address: 36035 Fulda, Germany
Phone: +49 661 6003-0
Fax: +49 661 6003-607
E-mail: mail@jumo.net
Internet: www.jumo.net

**JUMO Instrument Co. Ltd.**
JUMO House
Temple Bank, Riverway
Harlow - Essex CM20 2DY, UK
Phone: +44 1279 63 55 33
Fax: +44 1279 63 52 62
E-mail: sales@jumo.co.uk
Internet: www.jumo.co.uk

**JUMO Process Control, Inc.**
8 Technology Boulevard
Canastota, NY 13032, USA
Phone: 315-697-JUMO
1-800-554-JUMO
Fax: 315-697-5867
E-mail: info@jumo.us
Internet: www.jumo.us



# JUMO heatTHERM-DR

## Thermostat for top hat rail installation TH35, as per DIN EN 60715, design 8

**Type 603070/0002-8**[a]

- Protection class IP 20
- Top hat rail installation TH35
- Installation and user friendly

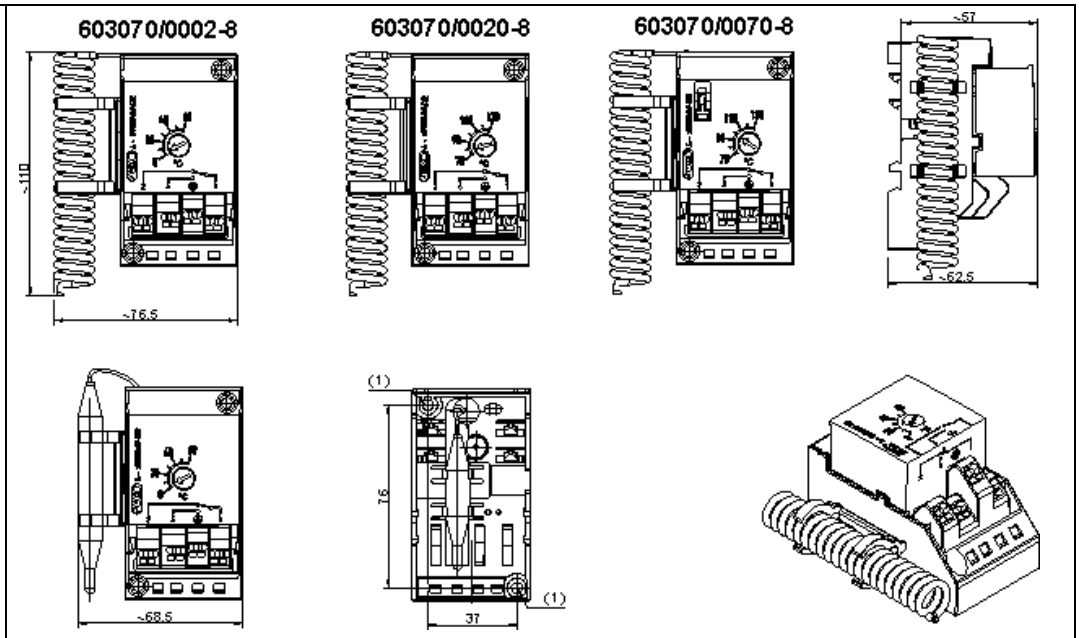


Fastening hole ( 1 )
= ∅ 4.5 mm

[a] On request - minimum order quantity 100 pieces.

**JUMO GmbH & Co. KG**
Delivery address: Mackenrodtstraße 14, 36039 Fulda, Germany
Postal address: 36035 Fulda, Germany
Phone: +49 661 6003-0
Fax: +49 661 6003-607
E-mail: mail@jumo.net
Internet: www.jumo.net

**JUMO Instrument Co. Ltd.**
JUMO House
Temple Bank, Riverway
Harlow - Essex CM20 2DY, UK
Phone: +44 1279 63 55 33
Fax: +44 1279 63 52 62
E-mail: sales@jumo.co.uk
Internet: www.jumo.co.uk

**JUMO Process Control, Inc.**
8 Technology Boulevard
Canastota, NY 13032, USA
Phone: 315-697-JUMO
1-800-554-JUMO
Fax: 315-697-5867
E-mail: info@jumo.us
Internet: www.jumo.us



# Order details

## Add-on thermostat JUMO heatTHERM, type 603070

**Minimum purchase order 100 pieces**

| Order code | ( 1 ) | Basic type | | |
|---|---|---|---|---|
| 603070 | | JUMO heatTHERM with single-pole snap switch | | |
| | **( 2 )** | **Basic type extensions** | | |
| 0001 | | Temperature controller (TR) | | |
| 0002 | | Temperature monitor (TW) | | |
| 0020 | | Safety temperature monitor (STW) or flue gas temperature monitor (ATW) | | |
| 0070 | | Safety temperature limiter (STB) | | |
| 0120 | | Temperature controller / safety temperature monitor (TR/STW) | | |
| 0170 | | Temperature controller / safety temperature limiter (TR/STB) | | |
| 0202 | | Temperature monitor / temperature monitor (TW/TW) | | |
| | **( 3 )** | **Design** | | |
| 5 | | | Add-on thermostat, with sheath, flange sleeve, long-distance line or as contact probe | |
| 6 | | | Room thermostat with spiral probe | |
| 7 | | | Top hat rail thermostat, with long-distance line | |
| 8 | | | Top hat rail thermostat, with spiral probe | |
| | **( 4 )** | **Control / limit value range 1** [°**C**] | | |
| 016 | | -10...+40 | TR, TW | |
| 021 | | 0...+50 | TR, TW | |
| 026 | | 0...+120 | TR, TW | |
| 028 | | 0...+200 | TR, TW, STB | |
| 040 | | +20...+80 | STW | |
| 043 | | +20...+150 | TR, TW, STB | |
| 064 | | +50...+300 | TR, TW, STB | with sheath, select process connection 76 |
| 671 | | +70...+130 | STW, STB | |
| 380 | | +40...+230 | ATW | only with process connection 35 |
| | | further control/limit value ranges up to 350°C on request (up to +500°C without approval) | | |
| | **( 5 )** | **Control / limit value range 2** [°**C**] | | |
| 000 | | with permanently set limit value (single thermostat) | | |
| 016 | | -10...+40 | TR, TW | adjustable |
| 021 | | 0...+50 | TR, TW | adjustable |
| 671 | | +70...+130 | STW, STB | adjustable |
| | | further control/limit values permanently set up to 350°C on request (up to +500°C without approval) | | |

**JUMO GmbH & Co. KG**
Delivery address: Mackenrodtstraße 14, 36039 Fulda, Germany
Postal address: 36035 Fulda, Germany
Phone: +49 661 6003-0
Fax: +49 661 6003-607
E-mail: mail@jumo.net
Internet: www.jumo.net

**JUMO Instrument Co. Ltd.**
JUMO House
Temple Bank, Riverway
Harlow - Essex CM20 2DY, UK
Phone: +44 1279 63 55 33
Fax: +44 1279 63 52 62
E-mail: sales@jumo.co.uk
Internet: www.jumo.co.uk

**JUMO Process Control, Inc.**
8 Technology Boulevard
Canastota, NY 13032, USA
Phone: 315-697-JUMO
1-800-554-JUMO
Fax: 315-697-5867
E-mail: info@jumo.us
Internet: www.jumo.us



# Order details

## Add-on thermostat JUMO heatTHERM, type 603070

| Order code | | | |
|---|---|---|---|
| | **( 6 )** | **Hysteresis 1** | |
| 00 | | Without hysteresis (STB) | |
| 25 | | 2.5% | of the scale range |
| 70 | | 7% | of the scale range |
| | **( 7 )** | **Hysteresis 2** | |
| 00 | | Without hysteresis (STB) | |
| 25 | | 2.5% | of the scale range |
| 70 | | 7% | of the scale range |
| | **( 8 )** | **Long-distance line length 1** | |
| 0 | | 0 mm | only for room thermostat |
| 2000 | | 2000 mm | |
| | | Special length on request | |
| | **( 9 )** | **Long-distance line length 2** | |
| 0 | | 0 mm | only for room thermostat |
| 2000 | | 2000 mm | |
| | | Special length on request | |
| | **( 10 )** | **Material of long-distance line 1** | |
| 00 | | without long-distance line | |
| 20 | | CrNi | Stainless steel |
| 40 | | Cu | Copper |
| | **( 11 )** | **Material of long-distance line 2** | |
| 00 | | without long-distance line | Single thermostat |
| 20 | | CrNi | Stainless steel |
| 40 | | Cu | Copper |
| | **( 12 )** | **Process connection** | |
| 10 | | plain cylindrical probe / contact probe | |
| 15 | | Spiral probe | |
| 35 | | Sheath for heatTHERM with flange and intermediate piece | 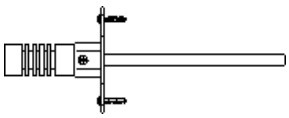 |
| 76[a] | | Intermediate piece | |

[a] for process connection 76, please select sheath as per data sheet 60.6710, screw-in sheath U with thread G1/2 made of stainless steel (CrNi) additionally.

**JUMO GmbH & Co. KG**
Delivery address: Mackenrodtstraße 14, 36039 Fulda, Germany
Postal address: 36035 Fulda, Germany
Phone: +49 661 6003-0
Fax: +49 661 6003-607
E-mail: mail@jumo.net
Internet: www.jumo.net

**JUMO Instrument Co. Ltd.**
JUMO House
Temple Bank, Riverway
Harlow - Essex CM20 2DY, UK
Phone: +44 1279 63 55 33
Fax: +44 1279 63 52 62
E-mail: sales@jumo.co.uk
Internet: www.jumo.co.uk

**JUMO Process Control, Inc.**
8 Technology Boulevard
Canastota, NY 13032, USA
Phone: 315-697-JUMO
1-800-554-JUMO
Fax: 315-697-5867
E-mail: info@jumo.us
Internet: www.jumo.us



# Order details

## Add-on thermostat JUMO heatTHERM, type 603070

| Order code | | | |
|---|---|---|---|
| | **( 13 )** | **Diameter** (probe diameter) | |
| 6 | | ∅ 6 mm | |
| 17 | | ∅ 17 mm | Spiral probe for room thermostat (with process connection 15) |
| 3.5 | | ∅ 3.5 mm | (with process connection 35) |
| | **( 14 )** | **Long-distance line insulation** | |
| 13 | | PVC hose, black | |
| | **( 15 )** | **Insulation length** (from housing) | |
| 460 | | 460 mm | |
| | | Special length on request | |
| | **( 16 )** | **Probe material 1** | |
| 20 | | CrNi | Stainless steel |
| 40 | | Cu | Copper |
| | **( 17 )** | **Probe material 2** | |
| 00 | | Single thermostat | |
| 20 | | CrNi | Stainless steel |
| 40 | | Cu | Copper |
| | **( 18 )** | **Extra codes**[a] | |
| 000 | | Without extra codes | |
| 402 | | Housing protection type IP54 | |
| 749 | | Setting range with 250 angular degrees (only STB/STW) | |
| 758 | | Clamping belt for contact probe | |
| 061 | | with UL approval | |
| 702 | | Snap switch, gold-plated | |

[a] State extra codes one after another, separated by commas.

**Order code**

| (1) | (2) | (3) | (4) | (5) | (6) | (7) | (8) | (9) | (10) | (11) | (12) | (13) | (14) | (15) | (16) | (17) | (18) | |
|---|---|---|---|---|---|---|---|---|---|---|---|---|---|---|---|---|---|---|
| 6073070 / | | - | - | - | - | - | - | - | - | - | - | - | - | - | - | - | / | , . . . |

**Order example**

| | | | | | | | | | | | | | | | | | | |
|---|---|---|---|---|---|---|---|---|---|---|---|---|---|---|---|---|---|---|
| 603070 / | 0001 | - 5 | - 021 | - 671 | - 70 | - 2000 | - 40 | - 10 | - 00 | - 00 | - 00 | - 00 | - 6 | - 00 | - 00 | - 6 | / 000[a] | , . . . |

[a] State extra codes one after another, separated by commas.

**JUMO GmbH & Co. KG**
Delivery address: Mackenrodtstraße 14, 36039 Fulda, Germany
Postal address: 36035 Fulda, Germany
Phone: +49 661 6003-0
Fax: +49 661 6003-607
E-mail: mail@jumo.net
Internet: www.jumo.net

**JUMO Instrument Co. Ltd.**
JUMO House
Temple Bank, Riverway
Harlow - Essex CM20 2DY, UK
Phone: +44 1279 63 55 33
Fax: +44 1279 63 52 62
E-mail: sales@jumo.co.uk
Internet: www.jumo.co.uk

**JUMO Process Control, Inc.**
8 Technology Boulevard
Canastota, NY 13032, USA
Phone: 315-697-JUMO
1-800-554-JUMO
Fax: 315-697-5867
E-mail: info@jumo.us
Internet: www.jumo.us



# Accessories

| **Sheath set**<br>suitable for<br>**1 probe** | Sheaths with sealing collar | | | | Clamp for strain relief | Disk for add-on thermo-stat | Screw for add-on thermo-stat |
|---|---|---|---|---|---|---|---|
| | 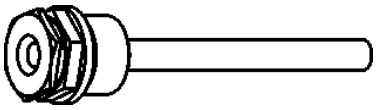 | | | | | 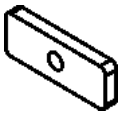 | |
| **Part No.** | Type | Abbreviation | Connection | ∅ sleeve x fitting length EL | | Material | Compressive strength at +150°C |
| 60/60003177 | Sheath for heatTHERM, 1 probe | 28 | G 1/2 | 8 x 100 mm | | Brass / nickel-plated | 48 bar |
| 60/60003203 | | | | 8 x 150 mm | | | |
| 60/60003171 | | | | 8 x 200 mm | | | |
| 60/60003172 | | | | 8 x 100 mm | | Stainless steel / 1.4571 | 88 bar |
| 60/60003205 | | | | 8 x 150 mm | | | |
| 60/60003173 | | | | 8 x 200 mm | | | |

| **Sheath set**<br>suitable for<br>**2 probes** | Sheaths with sealing collar | | | | Clamp for strain relief | Disk for add-on thermo-stat | Screw for add-on thermo-stat |
|---|---|---|---|---|---|---|---|
| | 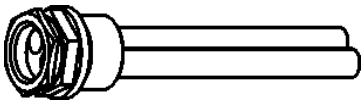 | | | | | 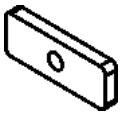 | |
| **Part No.** | Type | Abbreviation | Connection | ∅ sleeve x fitting length EL | | Material | Compressive strength at +150°C |
| 60/60003178 | Sheath for heatTHERM, 2 probes | 29 | G 1/2 | 2 x 8 x 100 mm | | Brass / nickel-plated | 48 bar |
| 60/60003204 | | | | 2 x 8 x 150 mm | | | |
| 60/60003174 | | | | 2 x 8 x 200 mm | | | |

| **Sheath set**<br>suitable for<br>**2 probes** | Sheaths with sealing collar | | | Pressure spring | Clamp for strain relief | Disk for add-on thermo-stat | Screw for add-on thermo-stat |
|---|---|---|---|---|---|---|---|
| | 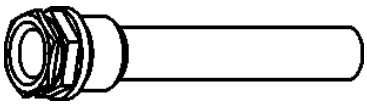 | | | | | 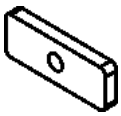 | |
| **Part No.** | Type | Abbreviation | Connection | ∅ sleeve x fitting length EL | | Material | Compressive strength at +150°C |
| 60/60003175 | Sheath for heatTHERM, 2 probes | 29 | G 1/2 | 15 x 100 mm | | Stainless steel / 1.4571 | 48 bar |
| 60/60003206 | | | | 15 x 150 mm | | | |
| 60/60003176 | | | | 15 x 200 mm | | | |

| **Adapter piece for sheath** | | Material | |
|---|---|---|---|
| **Part No.** | | | |
| 60/60507273 | | Steel / nickel-plated | |