RoHS compliant

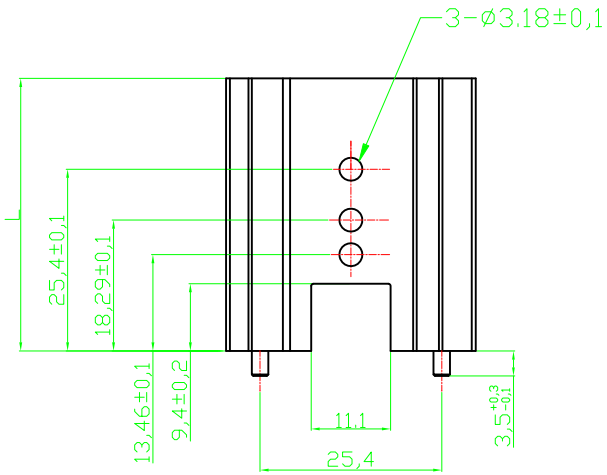

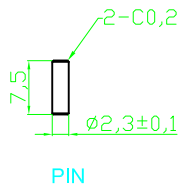

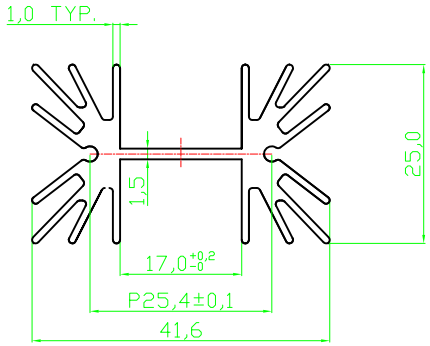

Material :AL 6063-T5 TS-78488
Finished : Black anodize

Option	L	Thermal resistance(K/W)
V8511W	25.4	6.5
V8511X	38.1	5
V8511Y	50.8	4
V8511Z	63.5	3.5

Scale	FREE						Date	Name
TOLERANCE						Drawn	11.08.2009	Dean
X.	±X					Approved	08.03.2010	Andy
X.X	±X							
UNIT	±0.2							
DIM	TOL	②	Update	08.03.2010	Dean			
X.°	±X°	①	Drawn	11.08.2009	Dean			
X.X°	±X°							
Angle	TOL	Id.	Modification	Date	Name			

ASSMANN WSW components

Customer-No.

ASSMANN WSW-No. V8511x

Drawing-No. ASS 0868 HS

rev02

Replace

Sheet