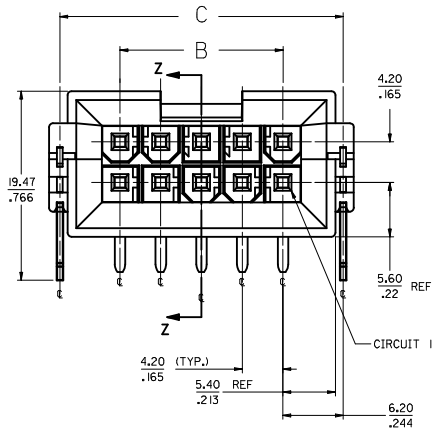

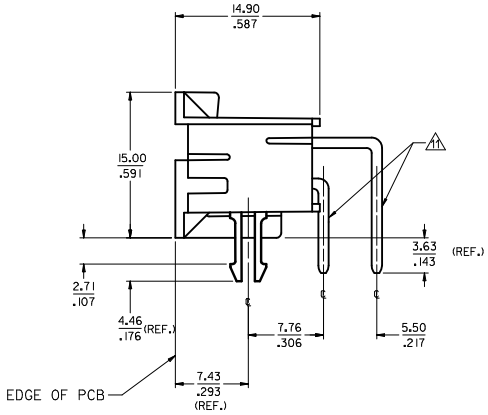

NOTES
1) MATERIALS
HOUSING: NYLON 4/6 UL 94V-0 GLASS FILLED, COLOR: BLACK
TERMINAL: BRASS
BOARD RETENTION CLIP: BRASS
2) FINISHES:
TERMINAL:
1.=(0.00254)/.000100 MIN. BRIGHT TIN OVER
(0.00127)/.000050 MIN. NICKEL
2.=(0.00076)/.000030 MIN. SELECT GOLD AND
(0.00254)/.000100 MIN. SELECT MATTE TIN
OVER (0.00127)/.000050 MIN. NICKEL OVERALL
4.=(0.00152)/.000060 MIN. REFLOWED MATTE TIN OVER
(0.00127)/.000050 MIN. NICKEL OVERALL
MOUNTING CLIP:
(0.00254)/.000100 MIN. MATTE TIN OVER
(0.00127)/.000050 MIN. NICKEL
3) PRODUCT SPECIFICATION: PS-43810-001
4) PACKAGING SPECIFICATION: PK-43810-001
5) PARTS MATES WITH MOLEX RECPTACLE #5557 AND #42474 AND #42385 HEADER
6) PART ALLOWS FOR (1.27)/.050 MAX MIS-ALIGNMENT WITH MATING HOUSINGS IN ANY DIRECTION
7) CONNECTOR ASSEMBLIES ARE NOT TO BE MATED AND UNMATED WHILE CIRCUITS ARE LIVE
8) PARTS ARE NOT DESIGNED FOR CURRENT SHARING
9) DISCOLORATION IN THE BANDOLIER CARRIER AREA OF THE PIN IS INHERENT TO THE PLATING PROCESS AND IS DUE TO THE MASKING EFFECT OF THE CARRIER. THIS DISCOLORATION IS IN A NON-FUNCTIONAL AREA OF THE PIN AND WILL NOT AFFECT THE PERFORMANCE OF THE HEADER ASSEMBLY.
10) PART CONFORMS TO CLASS "B" REQUIREMENTS OF COSMETIC SPECIFICATION PS-45499-002
11 FORMING MARKS ARE ACCEPTABLE

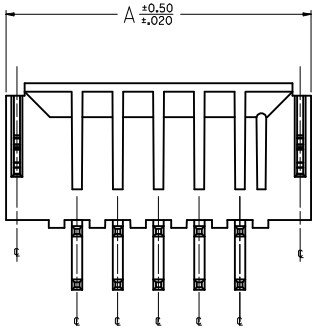

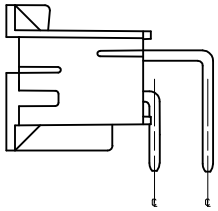

HEADER ASSEMBLY
WITH NO CLIP OPTION

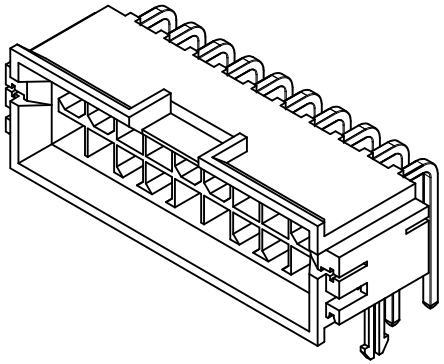

20 CKT SHOWN

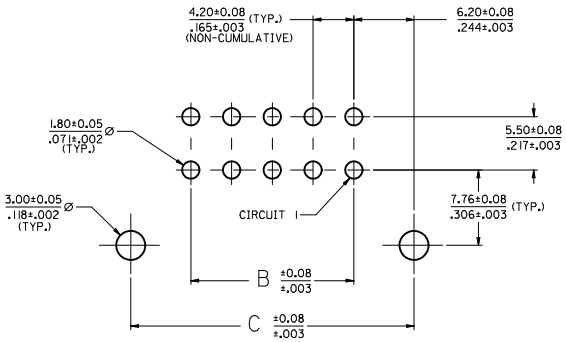

PCB LAYOUT: COMPONENT SIDE

RECOMMENDED PCB THICKNESS: 2.39±0.18 / .094±.007

CHANGE PLATING EC NO: UCP2012-1560 DRWN:NNGUYEN 2012/01/20 CHKD:BELL 2012/01/20 APPR:FSMITH 2012/02/02	DESCRIPTION	QUALITY SYMBOLS	GENERAL TOLERANCES (UNLESS SPECIFIED)	DIMENSION STYLE MM/IN	SCALE 4:1	DESIGN UNITS METRIC	THIRD ANGLE PROJECTION		
H	REV		mm / INCH	DRAWN BY MANLAPAZ DATE 01-06-97	TITLE MINI-FIT JR BMI RIGHT ANGLE HEADER ASM. FOR 2.39/.094 THK. PCB				
			4 PLACES ±--- / ±---	CHECKED BY BANDURA DATE 03-26-97					
			3 PLACES ±--- / ±.010	APPROVED BY FSMITH DATE 2012/01/19	molex MOLEX INCORPORATED				
			2 PLACES ±0.25 / ±.014	MATERIAL NO. SEE CHART	DOCUMENT NO. SD-43810-031		SHEET NO. 1 OF 2		
			1 PLACE ±.035 / ±---	SIZE D	THIS DRAWING CONTAINS INFORMATION THAT IS PROPRIETARY TO MOLEX INCORPORATED AND SHOULD NOT BE USED WITHOUT WRITTEN PERMISSION				
			ANGULAR ±1/2°						
			DRAFT WHERE APPLICABLE MUST REMAIN WITHIN DIMENSIONS						

	MATERIAL NO.	CIRCUIT SIZE	CLIP OPTION	DIM. "A"	DIM. "B"	DIM. "C"	FINISH
	43810-0045	4	YES	18.81 / .740	4.20 / .165	16.60 / .653	1
	43810-0046	6	YES	23.01 / .906	8.40 / .331	20.80 / .819	1
N	43810-0047	8	YES	27.21 / 1.071	12.60 / .496	25.00 / .984	1
	43810-0048	10	YES	31.41 / 1.237	16.80 / .661	29.20 / 1.150	1
N	43810-0049	12	YES	35.61 / 1.402	21.00 / .828	33.40 / 1.315	1
	43810-0050	14	YES	39.81 / 1.567	25.20 / .992	37.60 / 1.480	1
N	43810-0051	16	YES	44.01 / 1.733	29.40 / 1.157	41.80 / 1.646	1
	43810-0052	18	YES	48.21 / 1.898	33.60 / 1.323	46.00 / 1.811	1
N	43810-0053	20	YES	52.41 / 2.063	37.80 / 1.488	50.20 / 1.976	1
N	43810-0054	22	YES	56.61 / 2.229	42.00 / 1.654	54.40 / 2.142	1
	43810-0055	24	YES	60.81 / 2.394	46.20 / 1.819	58.60 / 2.307	1
	43810-0056	4	YES	18.81 / .740	4.20 / .165	16.60 / .653	2
	43810-0057	6	YES	23.01 / .906	8.40 / .331	20.80 / .819	2
N	43810-0058	8	YES	27.21 / 1.071	12.60 / .496	25.00 / .984	2
	43810-0059	10	YES	31.41 / 1.237	16.80 / .661	29.20 / 1.150	2
N	43810-0060	12	YES	35.61 / 1.402	21.00 / .828	33.40 / 1.315	2
	43810-0061	14	YES	39.81 / 1.567	25.20 / .992	37.60 / 1.480	2
N	43810-0062	16	YES	44.01 / 1.733	29.40 / 1.157	41.80 / 1.646	2
	43810-0063	18	YES	48.21 / 1.898	33.60 / 1.323	46.00 / 1.811	2
N	43810-0064	20	YES	52.41 / 2.063	37.80 / 1.488	50.20 / 1.976	2
N	43810-0065	22	YES	56.61 / 2.229	42.00 / 1.654	54.40 / 2.142	2
	43810-0066	24	YES	60.81 / 2.394	46.20 / 1.819	58.60 / 2.307	2

N = NOT TOOLED

	MATERIAL NO.	CIRCUIT SIZE	CLIP OPTION	DIM. "A"	DIM. "B"	DIM. "C"	FINISH
	43810-0265	4	NO	18.81 / .740	4.20 / .165	16.60 / .653	1
	43810-0266	6	NO	23.01 / .906	8.40 / .331	20.80 / .819	1
N	43810-0267	8	NO	27.21 / 1.071	12.60 / .496	25.00 / .984	1
	43810-0268	10	NO	31.41 / 1.237	16.80 / .661	29.20 / 1.150	1
N	43810-0269	12	NO	35.61 / 1.402	21.00 / .828	33.40 / 1.315	1
	43810-0270	14	NO	39.81 / 1.567	25.20 / .992	37.60 / 1.480	1
N	43810-0271	16	NO	44.01 / 1.733	29.40 / 1.157	41.80 / 1.646	1
	43810-0272	18	NO	48.21 / 1.898	33.60 / 1.323	46.00 / 1.811	1
N	43810-0273	20	NO	52.41 / 2.063	37.80 / 1.488	50.20 / 1.976	1
N	43810-0274	22	NO	56.61 / 2.229	42.00 / 1.654	54.40 / 2.142	1
	43810-0275	24	NO	60.81 / 2.394	46.20 / 1.819	58.60 / 2.307	1
	43810-0276	4	NO	18.81 / .740	4.20 / .165	16.60 / .653	2
	43810-0277	6	NO	23.01 / .906	8.40 / .331	20.80 / .819	2
N	43810-0278	8	NO	27.21 / 1.071	12.60 / .496	25.00 / .984	2
	43810-0279	10	NO	31.41 / 1.237	16.80 / .661	29.20 / 1.150	2
N	43810-0280	12	NO	35.61 / 1.402	21.00 / .828	33.40 / 1.315	2
	43810-0281	14	NO	39.81 / 1.567	25.20 / .992	37.60 / 1.480	2
N	43810-0282	16	NO	44.01 / 1.733	29.40 / 1.157	41.80 / 1.646	2
	43810-0283	18	NO	48.21 / 1.898	33.60 / 1.323	46.00 / 1.811	2
N	43810-0284	20	NO	52.41 / 2.063	37.80 / 1.488	50.20 / 1.976	2
N	43810-0285	22	NO	56.61 / 2.229	42.00 / 1.654	54.40 / 2.142	2
	43810-0286	24	NO	60.81 / 2.394	46.20 / 1.819	58.60 / 2.307	2

N = NOT TOOLED

MATERIAL NO.	CIRCUIT SIZE	CLIP OPTION	DIM. "A"	DIM. "B"	DIM. "C"	FINISH
	4	YES	18.81 / .740	4.20 / .165	16.60 / .653	4
	6	YES	23.01 / .906	8.40 / .331	20.80 / .819	4
	8	YES	27.21 / 1.071	12.60 / .496	25.00 / .984	4
43810-0548	10	YES	31.41 / 1.237	16.80 / .661	29.20 / 1.150	4
	12	YES	35.61 / 1.402	21.00 / .828	33.40 / 1.315	4
43810-0550	14	YES	39.81 / 1.567	25.20 / .992	37.60 / 1.480	4
	16	YES	44.01 / 1.733	29.40 / 1.157	41.80 / 1.646	4
	18	YES	48.21 / 1.898	33.60 / 1.323	46.00 / 1.811	4
	20	YES	52.41 / 2.063	37.80 / 1.488	50.20 / 1.976	4
	22	YES	56.61 / 2.229	42.00 / 1.654	54.40 / 2.142	4
	24	YES	60.81 / 2.394	46.20 / 1.819	58.60 / 2.307	4

N = NOT TOOLED

SEE SHEET 1
EC NO: UCP2012-1560 2012/01/20
DRWN:NNGUYEN 2012/01/20
CHKD:BELL 2012/02/02
APPR:FSMITH
DESCRIPTION
REV
H

QUALITY SYMBOLS
=0
=0
=0

GENERAL TOLERANCES (UNLESS SPECIFIED)

	mm	INCH
4 PLACES	± ---	± ---
3 PLACES	± ---	± .010
2 PLACES	± 0.25	± .014
1 PLACE	± .035	± ---
ANGULAR ±1/2°		

DRAFT WHERE APPLICABLE MUST REMAIN WITHIN DIMENSIONS

DIMENSION STYLE: MM/IN
SCALE: 1:1
DESIGN UNITS: METRIC
THIRD ANGLE PROJECTION

DRAWN BY: MANLAPAZ DATE: 01-06-97
CHECKED BY: BANDURA DATE: 03-26-97
APPROVED BY: FSMITH DATE: 2012/01/19

TITLE: MINI-FIT JR BMI RIGHT ANGLE HEADER ASM. FOR 2.39/.094 THK. PCB

MOLEX INCORPORATED

MATERIAL NO.: SEE CHART
DOCUMENT NO.: SD-43810-031
SHEET NO.: 2 OF 2
SIZE: D

THIS DRAWING CONTAINS INFORMATION THAT IS PROPRIETARY TO MOLEX INCORPORATED AND SHOULD NOT BE USED WITHOUT WRITTEN PERMISSION