DATA SHEET

XA-S3

XA 16-bit microcontroller
32 K/1 K OTP/ROM/ROMless, 8-channel 8-bit A/D,
low voltage (2.7 V–5.5 V), I^2C, 2 UARTs,
16 MB address range

Product specification
Supersedes data of 2000 Dec 01

2013 Sep 04

XA 16-bit microcontroller
32 K/1 K OTP/ROM/ROMless, 8-channel 8-bit A/D, low voltage (2.7 V–5.5 V), I^2C, 2 UARTs, 16 MB address range

XA-S3

GENERAL DESCRIPTION

The XA-S3 device is a member of NXP Semiconductors' XA (eXtended Architecture) family of high performance 16-bit single-chip microcontrollers.

The XA-S3 device combines many powerful peripherals on one chip. With its high performance A/D converter, timers/counters, watchdog, Programmable Counter Array (PCA), I^2C interface, dual UARTs, and multiple general purpose I/O ports, it is suited for general multipurpose high performance embedded control functions.

Specific features of the XA-S3

- 2.7 V to 5.5 V operation.
- 32 K bytes of on-chip EPROM/ROM program memory.
- 1024 bytes of on-chip data RAM.
- Supports off-chip addressing up to 16 megabytes (24 address lines). A clock output reference is added to simplify external bus interfacing.
- High performance 8-channel 8-bit A/D converter with automatic channel scan and repeated read functions. Completes a conversion in 4.46 microseconds at 30 MHz. Alternate operating mode allows 10-bit conversion results.
- Three standard counter/timers with enhanced features. All timers have a toggle output capability.
- Watchdog timer.
- 5-channel 16-bit Programmable Counter Array (PCA).
- I^2C-bus serial I/O port with byte-oriented master and slave functions.
- Two enhanced UARTs with independent baud rates.
- Seven software interrupts.
- Active low reset output pin indicates all reset occurrences (external reset, watchdog reset and the RESET instruction). A reset source register allows program determination of the cause of the most recent reset.
- 50 I/O pins, each with four programmable output configurations.
- 30 MHz operating frequency at 2.7 V to 5.5 V V_{DD}.
- Power saving operating modes: Idle and Power-down. Wake-up from power-down via an external interrupt is supported.
- 68-pin PLCC and 80-pin PQFP packages.

ORDERING INFORMATION

ROMless	ROM	EPROM		TEMPERATURE RANGE (°C) AND PACKAGE	FREQ. (MHz)	DRAWING NUMBER
PXAS30KBA	PXAS33KBA	PXAS37KBA	OTP	0 to +70, Commercial 68-pin Plastic Leaded Chip Carrier	30	SOT188-2[1]
PXAS30KBBE	PXAS33KBBE	PXAS37KBBE	OTP	0 to +70, Commercial 80-pin Plastic Low Profile Quad Flat Pack	30	SOT315-1
PXAS30KFA	PXAS33KFA	PXAS37KFA	OTP	–40°C to +85°C, Industrial 68-pin Plastic Leaded Chip Carrier	30	SOT188-2[1]
PXAS30KFBE	PXAS33KFBE	PXAS37KFBE	OTP	–40°C to +85°C, Industrial 80-pin Plastic Low Profile Quad Flat Pack	30	SOT315-1

NOTE:
1. Corrected SOT number; no physical change.

PIN CONFIGURATIONS

68-pin PLCC package

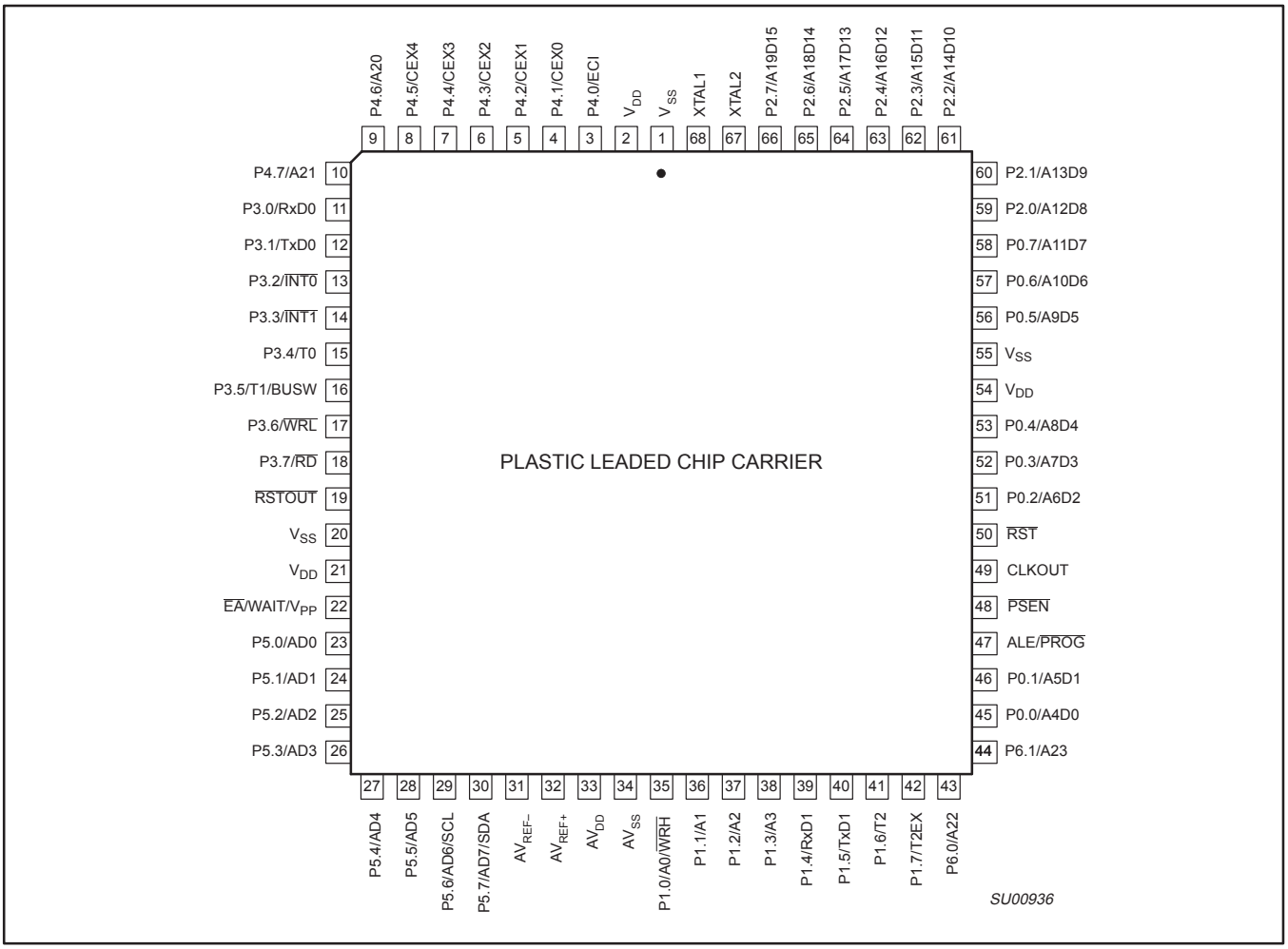

80-pin LQFP package

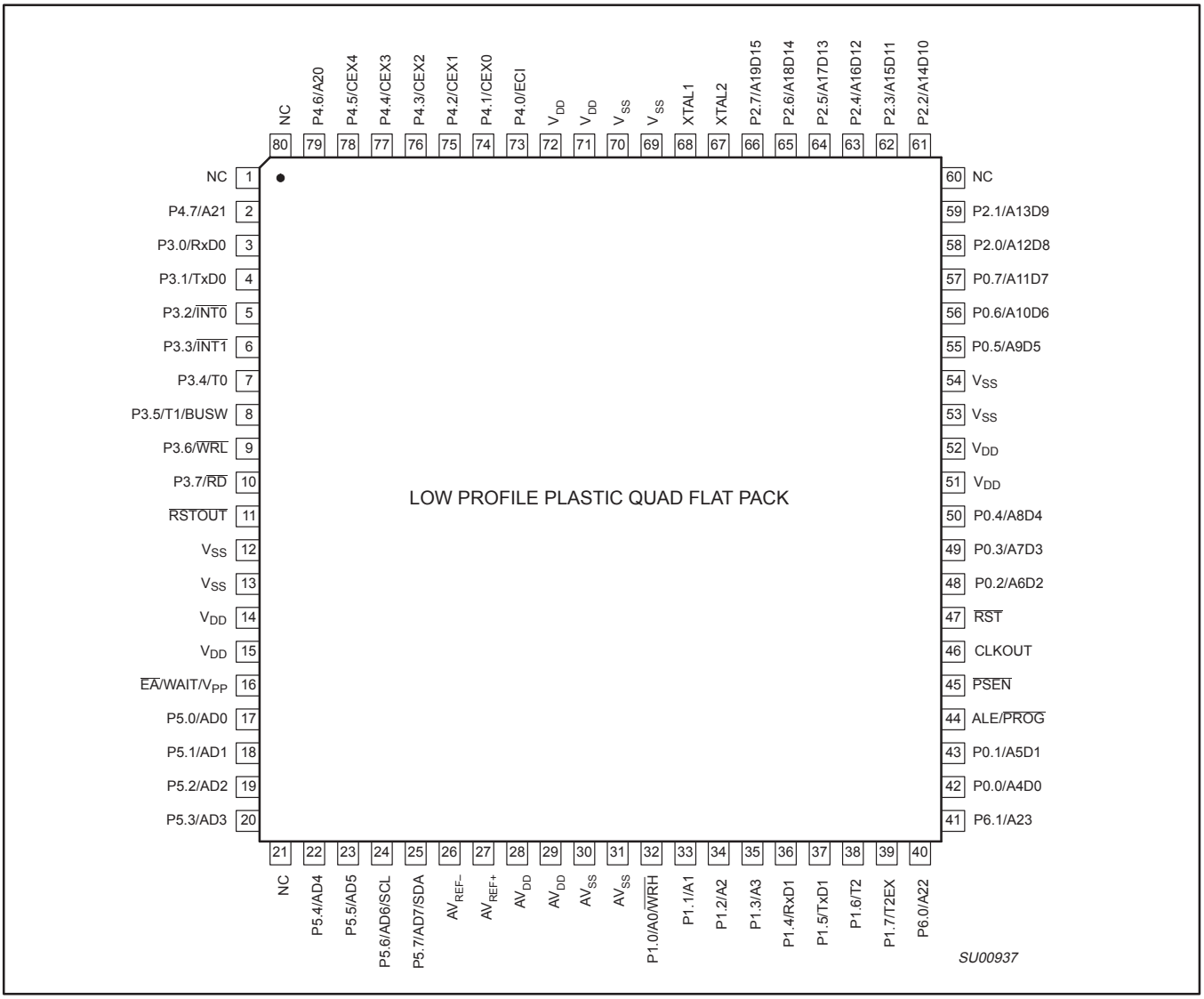

LOGIC SYMBOL

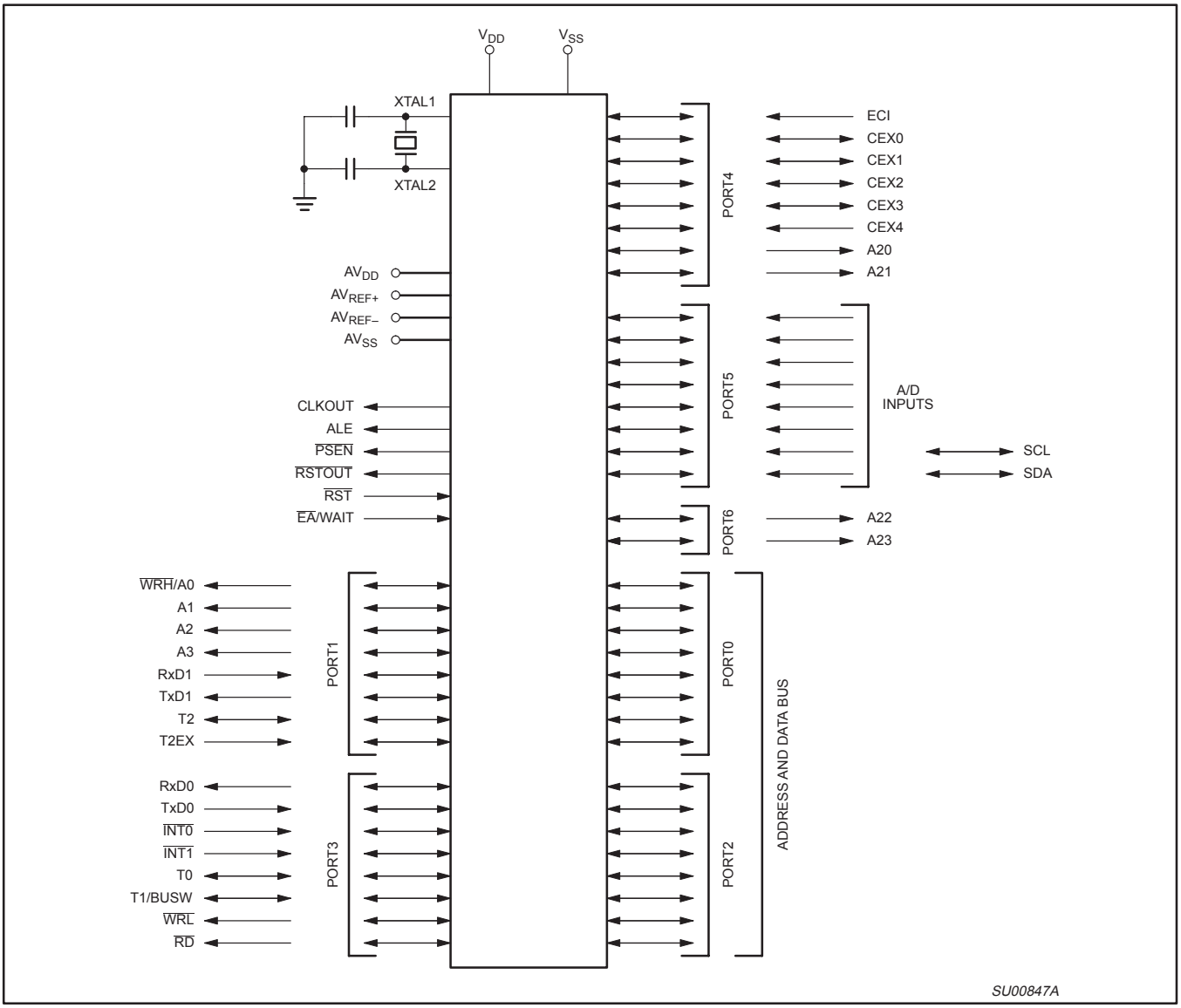

BLOCK DIAGRAM

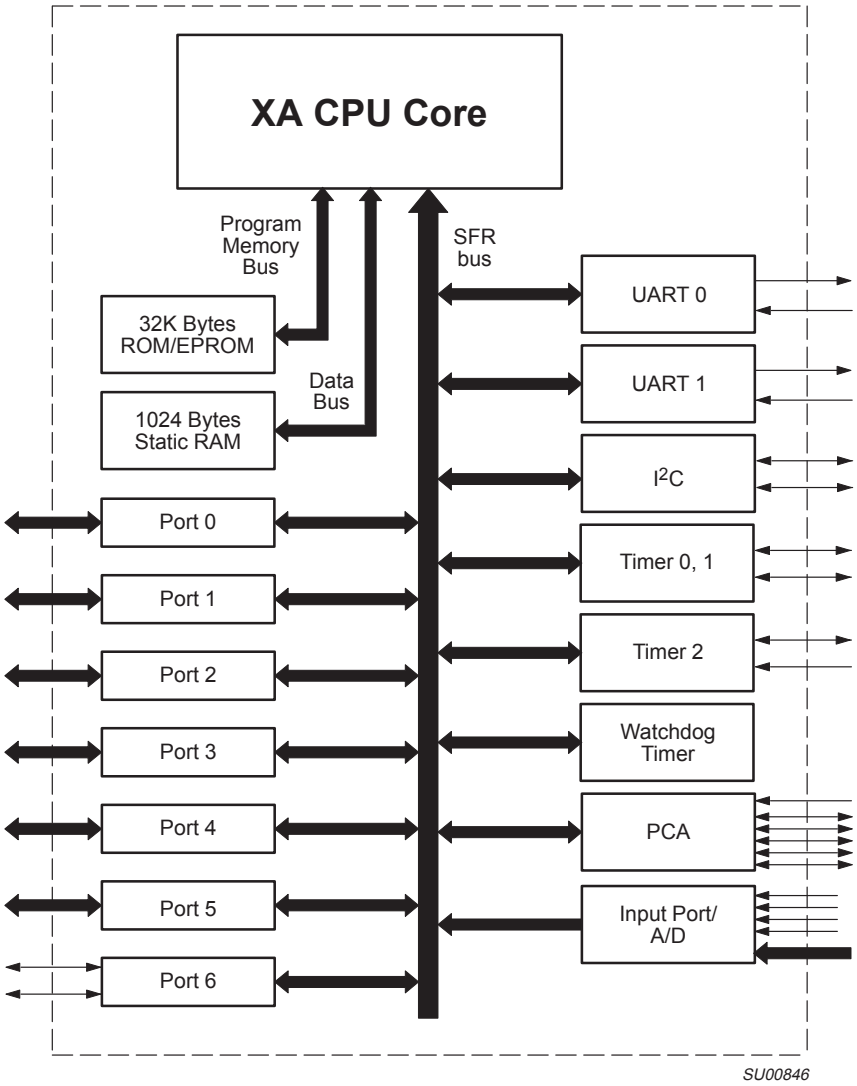

PIN DESCRIPTIONS

MNEMONIC	PIN NUMBER		TYPE	NAME AND FUNCTION
	PLCC	LQFP		
V_{SS}	1, 20, 55	12, 13, 53, 54, 69, 70	I	**Ground:** 0 V reference.
V_{DD}	2, 21, 54	14, 15, 51, 52, 71, 72	I	**Power Supply:** This is the power supply voltage for normal, idle, and power down operation.
$\overline{RST}$	50	47	I	**Reset:** A low on this pin resets the microcontroller, causing I/O ports and peripherals to take on their default states, and the processor to begin execution at the address contained in the reset vector.
$\overline{RSTOUT}$	19	11	O	**Reset Output:** This pin outputs a low whenever the XA-S3 processor is reset for any reason. This includes an external reset via the $\overline{RST}$ pin, watchdog reset, and the $\overline{RESET}$ instruction.
ALE/$\overline{PROG}$	47	44	I/O	**Address Latch Enable/Program Pulse:** A high output on the ALE pin signals external circuitry to latch the address portion of the multiplexed address/data bus. A pulse on ALE occurs only when it is needed in order to process a bus cycle.
$\overline{PSEN}$	48	45	O	**Program Store Enable:** The read strobe for external program memory. When the microcontroller accesses external program memory, $\overline{PSEN}$ is driven low in order to enable memory devices. $\overline{PSEN}$ is only active when external code accesses are performed.
$\overline{EA}$/WAIT/V_{PP}	22	16	I	**External Access/Bus Wait:** The $\overline{EA}$ input determines whether the internal program memory of the microcontroller is used for code execution. The value on the $\overline{EA}$ pin is latched as the external reset input is released and applies during later execution. When latched as a 0, external program memory is used exclusively. When latched as a 1, internal program memory will be used up to its limit, and external program memory used above that point. After reset is released, this pin takes on the function of bus WAIT input. If WAIT is asserted high during an external bus access, that cycle will be extended until WAIT is released.
XTAL1	68	68	I	**Crystal 1:** Input to the inverting amplifier used in the oscillator circuit and input to the internal clock generator circuits.
XTAL2	67	67	I	**Crystal 2:** Output from the oscillator amplifier.
CLKOUT	49	46	O	**Clock Output:** This pin outputs a buffered version of the internal CPU clock. The clock output may be used in conjunction with the external bus to synchronize WAIT state generators, etc. The clock output may be disabled by software.
AV_{DD}	33	28, 29	I	**Analog Power Supply:** Positive power supply input for the A/D converter.
AV_{SS}	34	30, 31	I	**Analog Ground.**
AV_{REF+}	32	27	I	**A/D Positive Reference Voltage:** High end reference for the A/D converter.
AV_{REF-}	31	26	I	**A/D Negative Reference Voltage:** Low end reference for the A/D converter.
P0.0 – P0.7	45, 46, 51–53, 56–58	42, 43, 48–50, 55–57	I/O	**Port 0:** Port 0 is an 8-bit I/O port with a user-configurable output type. Port 0 latches have 1s written to them and are configured in the quasi-bidirectional mode during reset. The operation of port 0 pins as inputs and outputs depends upon the port configuration selected. Each port pin is configured independently. Refer to the section on I/O port configuration and the DC Electrical Characteristics for details. When the external program/data bus is used, Port 0 becomes the multiplexed low data/instruction byte and address lines 4 through 11.

MNEMONIC	PIN NUMBER		TYPE	NAME AND FUNCTION	
	PLCC	LQFP			
P1.0 – P1.7	35–42	32–39	I/O	**Port 1:** Port 1 is an 8-bit I/O port with a user-configurable output type. Port 1 latches have 1s written to them and are configured in the quasi-bidirectional mode during reset. The operation of port 1 pins as inputs and outputs depends upon the port configuration selected. Each port pin is configured independently. Refer to the section on I/O port configuration and the DC Electrical Characteristics for details.	
				Port 1 also provides various special functions as described below:	
	35	32	O	**A0/$\overline{\text{WRH}}$ (P1.0)**	Address bit 0 of the external address bus when the eternal data bus is configured for an 8-bit width. When the external data bus is configured for a 16-bit width, this pin becomes the high byte write strobe.
	36	33	O	**A1 (P1.1):**	Address bit 1 of the external address bus.
	37	34	O	**A2 (P1.2):**	Address bit 2 of the external address bus.
	38	35	O	**A3 (P1.3):**	Address bit 3 of the external address bus.
	39	36	I	**RxD1 (P1.4):**	Serial port 1 receiver input.
	40	37	O	**TxD1 (P1.5):**	Serial port 1 transmitter output.
	41	38	I/O	**T2 (P1.6):**	Timer/counter 2 external count input or overflow output.
	42	39	O	**T2EX (P1.7):**	Timer/counter 2 reload/capture/direction control.
P2.0 – P2.7	59–66	58, 59, 61–66	I/O	**Port 2:** Port 2 is an 8-bit I/O port with a user-configurable output type. Port 2 latches have 1s written to them and are configured in the quasi-bidirectional mode during reset. The operation of port 2 pins as inputs and outputs depends upon the port configuration selected. Each port pin is configured independently. Refer to the section on I/O port configuration and the DC Electrical Characteristics for details.	
				When the external program/data bus is used in 16-bit mode, Port 2 becomes the multiplexed high data/instruction byte and address lines 12 through 19. When the external data/address bus is used in 8-bit mode, the number of address lines that appear on Port 2 is user programmable in groups of 4 bits.	
P3.0 – P3.7	11–18	3–10	I/O	**Port 3:** Port 3 is an 8-bit I/O port with a user-configurable output type. Port 3 latches have 1s written to them and are configured in the quasi-bidirectional mode during reset. The operation of port 3 pins as inputs and outputs depends upon the port configuration selected. Each port pin is configured independently. Refer to the section on I/O port configuration and the DC Electrical Characteristics for details.	
				Port 3 also provides the various special functions as described below:	
	11	3	I	**RxD0 (P3.0):**	Receiver input for serial port 0.
	12	4	O	**TxD0 (P3.1):**	Transmitter output for serial port 0.
	13	5	I	**$\overline{\text{INT0}}$ (P3.2):**	External interrupt 0 input.
	14	6	I	**$\overline{\text{INT1}}$ (P3.3):**	External interrupt 1 input.
	15	7	I/O	**T0 (P3.4):**	Timer/counter 0 external count input or overflow output.
	16	8	I/O	**T1 / BUSW (P3.5):**	Timer/counter 1 external count input or overflow output. The value on this pin is latched as an external chip reset is completed and defines the default external data bus width.
	17	9	O	**$\overline{\text{WRL}}$ (P3.6):**	External data memory low byte write strobe.
	18	10	O	**$\overline{\text{RD}}$ (P3.7):**	External data memory read strobe.
P4.0 – P4.7	3–10	73–79, 2	I/O	**Port 4:** Port 4 is an 8-bit I/O port with a user-configurable output type. Port 4 latches have 1s written to them and are configured in the quasi-bidirectional mode during reset. The operation of Port 4 pins as inputs and outputs depends upon the port configuration selected. Each port pin is configured independently. Refer to the section on I/O port configuration and the DC Electrical Characteristics for details.	
				Port 4 also provides various special functions as described below:	
	3	73	I	**ECI (P4.0):**	PCA External clock input.
	4	74	I/O	**CEX0 (P4.1):**	Capture/compare external I/O for PCA module 0.
	5	75	I/O	**CEX1 (P4.2):**	Capture/compare external I/O for PCA module 1.
	6	76	I/O	**CEX2 (P4.3):**	Capture/compare external I/O for PCA module 2.
	7	77	I/O	**CEX3 (P4.4):**	Capture/compare external I/O for PCA module 3.
	8	78	I/O	**CEX4 (P4.5):**	Capture/compare external I/O for PCA module 4.
	9	79	O	**A20 (P4.6):**	Address bit 20 of the external address bus.
	10	2	O	**A21 (P4.7):**	Address bit 21 of the external address bus.

MNEMONIC	PIN NUMBER		TYPE	NAME AND FUNCTION	
	PLCC	LQFP			
P5.0 – P5.7	23–30	17–20, 22–25	I/O	**Port 5:** Port 5 is an 8-bit I/O port with a user-configurable output type. Port 5 latches have 1s written to them and are configured in the quasi-bidirectional mode during reset. The operation of Port 5 pins as inputs and outputs depends upon the port configuration selected. Each port pin is configured independently. Refer to the section on I/O port configuration and the DC Electrical Characteristics for details.	
				Port 5 also provides various special functions as described below. Port 5 pins used as A/D inputs must be configured by the user to the high impedance mode.	
	23	17	I	**AD0 (P5.0):**	A/D channel 0 input.
	24	18	I	**AD1 (P5.1):**	A/D channel 1 input.
	25	19	I	**AD2 (P5.2):**	A/D channel 2 input.
	26	20	I	**AD3 (P5.3):**	A/D channel 3 input.
	27	22	I	**AD4 (P5.4):**	A/D channel 4 input.
	28	23	I	**AD5 (P5.5):**	A/D channel 5 input.
	29	24	I/O	**AD6/SCL (P5.6):**	A/D channel 6 input. I^2C serial clock input/output.
	30	25	I/O	**AD7/SDA (P5.7):**	A/D channel 7 input. I^2C serial data input/output.
P6.0 – P6.7	43, 44	40, 41	I/O	**Port 6:** Port 6 is a 2-bit I/O port with a user-configurable output type. Port 6 latches have 1s written to them and are configured in the quasi-bidirectional mode during reset. The operation of Port 6 pins as inputs and outputs depends upon the port configuration selected. Each port pin is configured independently. Refer to the section on I/O port configuration and the DC Electrical Characteristics for details.	
				Port 6 also provides special functions as described below:	
	43	40	O	**A22 (P6.0):**	Address bit 22 of the external address bus.
	44	41	O	**A23 (P6.1):**	Address bit 23 of the external address bus.

Table 1. Special Function Registers

NAME	DESCRIPTION	SFR Address	BIT FUNCTIONS AND ADDRESSES MSB							LSB	Reset Value
			3F7	3F6	3F5	3F4	3F3	3F2	3F1	3F0	
ADCON#*	A/D control register	43E	–	–	–	–	ADRES	ADMOD	ADSST	ADINT	00h
			3FF	3FE	3FD	3FC	3FB	3FA	3F9	3F8	
ADCS#*	A/D channel select register	43F	ADCS7	ADCS6	ADCS5	ADCS4	ADCS3	ADCS2	ADCS1	ADCS0	00h
ADCFG#	A/D timing configuration	4B9	–	–	–	–	A/D Timing Configuration				0Fh
ADRSH0#	A/D high byte result, channel 0	4B0									xx
ADRSH1#	A/D high byte result, channel 1	4B1									xx
ADRSH2#	A/D high byte result, channel 2	4B2									xx
ADRSH3#	A/D high byte result, channel 3	4B3									xx
ADRSH4#	A/D high byte result, channel 4	4B4									xx
ADRSH5#	A/D high byte result, channel 5	4B5									xx
ADRSH6#	A/D high byte result, channel 6	4B6									xx
ADRSH7#	A/D high byte result, channel 7	4B7									xx
ADRSL#	Two LSBs of 10-bit A/D result	4B8									xx
BCR#	Bus configuration register	46A	–	–	CLKD	WAITD	BUSD	BC2	BC1	BC0	Note 1
BTRH	Bus timing register high byte	469	DW1	DW0	DWA1	DWA0	DR1	DR0	DRA1	DRA0	FFh
BTRL	Bus timing register low byte	468	WM1	WM0	ALEW	–	CR1	CR0	CRA1	CRA0	EFh
			2D7	2D6	2D5	2D4	2D3	2D2	2D1	2D0	
CCON#*	PCA counter control	41A	CF	CR	–	CCF4	CCF3	CCF2	CCF1	CCF0	00h
CMOD#	PCA mode control	490	CIDL	WDTE	–	–	–	CPS1	CPS0	ECF	00h
CH#	PCA counter high byte	48B									00h
CL#	PCA counter low byte	48A									00h
CCAPM0#	PCA module 0 mode	491	–	ECOM0	CAPP0	CAPN0	MAT0	TOG0	PWM0	ECCF0	00h
CCAPM1#	PCA module 1 mode	492	–	ECOM1	CAPP1	CAPN1	MAT1	TOG1	PWM1	ECCF1	00h

NAME	DESCRIPTION	SFR Address	BIT FUNCTIONS AND ADDRESSES MSB							LSB	Reset Value
CCAPM2#	PCA module 2 mode	493	–	ECOM2	CAPP2	CAPN2	MAT2	TOG2	PWM2	ECCF2	00h
CCAPM3#	PCA module 3 mode	494	–	ECOM3	CAPP3	CAPN3	MAT3	TOG3	PWM3	ECCF3	00h
CCAPM4#	PCA module 4 mode	495	–	ECOM4	CAPP4	CAPN4	MAT4	TOG4	PWM4	ECCF4	00h
CCAP0H#	PCA module 0 capture high byte	497									xx
CCAP1H#	PCA module 1 capture high byte	499									xx
CCAP2H#	PCA module 2 capture high byte	49B									xx
CCAP3H#	PCA module 3 capture high byte	49D									xx
CCAP4H#	PCA module 4 capture high byte	49F									xx
CCAP0L#	PCA module 0 capture low byte	496									xx
CCAP1L#	PCA module 1 capture low byte	498									xx
CCAP2L#	PCA module 2 capture low byte	49A									xx
CCAP3L#	PCA module 3 capture low byte	49C									xx
CCAP4L#	PCA module 4 capture low byte	49E									xx
CS	Code segment	443									00h
DS	Data segment	441									00h
ES	Extra segment	442									00h
			367	366	365	364	363	362	361	360	
I2CON#*	I^2C control register	42C	CR2	ENA	STA	STO	SI	AA	CR1	CR0	00h
I2STAT#	I^2C status register	46C	I^2C Status Code/Vector					0	0	0	F8h
I2DAT#	I^2C data register	46D									xx
I2ADDR#	I^2C address register	46E	I^2C Slave Address							GC	00h
			33F	33E	33D	33C	33B	33A	339	338	
IEH*	Interrupt enable high byte	427	–	–	–	–	ETI1	ERI1	ETI0	ERI0	00h
			337	336	335	334	333	332	331	330	
IEL#*	Interrupt enable low byte	426	EA	EAD	EPC	ET2	ET1	EX1	ET0	EX0	00h
			377	376	375	374	373	372	371	370	
IELB#*	Interrupt enable B low byte	42E	–	–	EI2	EC4	EC3	EC2	EC1	EC0	00h
IPA0	Interrupt priority A0	4A0	–	PT0			–	PX0			00h
IPA1	Interrupt priority A1	4A1	–	PT1			–	PX1			00h
IPA2#	Interrupt priority A2	4A2	–	PPC			–	PT2			00h
IPA3#	Interrupt priority A3	4A3	–	–			–	PAD			00h
IPA4	Interrupt priority A4	4A4	–	PTI0			–	PRI0			00h
IPA5	Interrupt priority A5	4A5	–	PTI1			–	PRI1			00h
IPB0#	Interrupt priority B0	4A8	–	PC1			–	PC0			00h
IPB1#	Interrupt priority B1	4A9	–	PC3			–	PC2			00h
IPB2#	Interrupt priority B2	4AA	–	PI2			–	PC4			00h
			387	386	385	384	383	382	381	380	
P0*	Port 0	430	A11D7	A10D6	A9D5	A8D4	A7D3	A6D2	A5D1	A4D0	FFh
			38F	38E	38D	38C	38B	38A	389	388	
P1*	Port 1	431	T2EX	T2	TxD1	RxD1	A3	A2	A1	A0/WRH	FFh
			397	396	395	394	393	392	391	390	
P2*	Port 2	432	A19D15	A18D14	A17D13	A16D12	A15D11	A14D10	A13D9	A12D8	FFh
			39F	39E	39D	39C	39B	39A	399	398	
P3*	Port 3	433	RD	WRL	T1	T0	INT1	INT0	TxD0	RxD0	FFh
			3A7	3A6	3A5	3A4	3A3	3A2	3A1	3A0	
P4#*	Port 4	434	A21	A20	CEX4	CEX3	CEX2	CEX1	CEX0	ECI	FFh

NAME	DESCRIPTION	SFR Address	BIT FUNCTIONS AND ADDRESSES MSB							LSB	Reset Value
			3AF	3AE	3AD	3AC	3AB	3AA	3A9	3A8	
P5#*	Port 5	435	AD7/SDA	AD6/SCL	AD5	AD4	AD3	AD2	AD1	AD0	FFh
									3B1	3B0	
P6#*	Port 6	436	–	–	–	–	–	–	A23	A22	FFh
P0CFGA	Port 0 configuration A	470									Note 5
P1CFGA	Port 1 configuration A	471									Note 5
P2CFGA	Port 2 configuration A	472									Note 5
P3CFGA	Port 3 configuration A	473									Note 5
P4CFGA#	Port 4 configuration A	474									Note 5
P5CFGA#	Port 5 configuration A	475									Note 5
P6CFGA#	Port 6 configuration A	476	–	–	–	–	–	–			Note 5
P0CFGB	Port 0 configuration B	4F0									Note 5
P1CFGB	Port 1 configuration B	4F1									Note 5
P2CFGB	Port 2 configuration B	4F2									Note 5
P3CFGB	Port 3 configuration B	4F3									Note 5
P4CFGB#	Port 4 configuration B	4F4									Note 5
P5CFGB#	Port 5 configuration B	4F5									Note 5
P6CFGB#	Port 6 configuration B	4F6	–	–	–	–	–	–			Note 5
			227	226	225	224	223	222	221	220	
PCON*	Power control register	404	–	–	–	–	–	–	PD	IDL	00h
			20F	20E	20D	20C	20B	20A	209	208	
PSWH*	Program status word (high byte)	401	SM	TM	RS1	RS0	IM3	IM2	IM1	IM0	Note 2
			207	206	205	204	203	202	201	200	
PSWL*	Program status word (low byte)	400	C	AC	–	–	–	V	N	Z	Note 2
			217	216	215	214	213	212	211	210	
PSW51*	80C51 compatible PSW	402	C	AC	F0	RS1	RS0	V	F1	P	Note 3
RSTSRC#	Reset source register	463	–	–	–	–	–	R_WD	R_CMD	R_EXT	Note 7
RTH0	Timer 0 reload register, high byte	455									00h
RTH1	Timer 1 reload register, high byte	457									00h
RTL0	Timer 0 reload register, low byte	454									00h
RTL1	Timer 1 reload register, low byte	456									00h
			307	306	305	304	303	302	301	300	
S0CON*	Serial port 0 control register	420	SM0_0	SM1_0	SM2_0	REN_0	TB8_0	RB8_0	TI_0	RI_0	00h
			30F	30E	30D	30C	30B	30A	309	308	
S0STAT#*	Serial port 0 extended status	421	–	–	–	ERR0	FE0	BR0	OE0	STINT0	00h
S0BUF	Serial port 0 data buffer register	460									xx
S0ADDR	Serial port 0 address register	461									00h
S0ADEN	Serial port 0 address enable	462									00h
			327	326	325	324	323	322	321	320	
S1CON*	Serial port 1 control register	424	SM0_1	SM1_1	SM2_1	REN_1	TB8_1	RB8_1	TI_1	RI_1	00H
			32F	32E	32D	32C	32B	32A	329	328	
S1STAT#*	Serial port 1 extended status	425	–	–	–	ERR1	FE1	BR1	OE1	STINT1	00h
S1BUF	Serial port 1 data buffer register	464									xx
S1ADDR	Serial port 1 address register	465									00h

NAME	DESCRIPTION	SFR Address	BIT FUNCTIONS AND ADDRESSES MSB							LSB	Reset Value
S1ADEN	Serial port 1 address enable	466									00h
SCR	System configuration register	440	–	–	–	–	PT1	PT0	CM	PZ	00h
			21F	21E	21D	21C	21B	21A	219	218	
SSEL*	Segment selection register	403	ESWEN	R6SEG	R5SEG	R4SEG	R3SEG	R2SEG	R1SEG	R0SEG	00h
SWE	Software interrupt enable	47A	–	SWE7	SWE6	SWE5	SWE4	SWE3	SWE2	SWE1	00h
			357	356	355	354	353	352	351	350	
SWR*	Software interrupt request	42A	–	SWR7	SWR6	SWR5	SWR4	SWR3	SWR2	SWR1	00h
			2C7	2C6	2C5	2C4	2C3	2C2	2C1	2C0	
T2CON*	Timer 2 control register	418	TF2	EXF2	RCLK0	TCLK0	EXEN2	TR2	C/T2	CP/RL2	00h
			2CF	2CE	2CD	2CC	2CB	2CA	2C9	2C8	
T2MOD*	Timer 2 mode control	419	–	–	RCLK1	TCLK1	–	–	T2OE	DCEN	00h
TH2	Timer 2 high byte	459									00h
TL2	Timer 2 low byte	458									00h
T2CAPH	Timer 2 capture, high byte	45B									00h
T2CAPL	Timer 2 capture, low byte	45A									00h
			287	286	285	284	283	282	281	280	
TCON*	Timer 0 and 1 control register	410	TF1	TR1	TF0	TR0	IE1	IT1	IE0	IT0	00h
TH0	Timer 0 high byte	451									00h
TH1	Timer 1 high byte	453									00h
TL0	Timer 0 low byte	450									00h
TL1	Timer 1 low byte	452									00h
TMOD	Timer 0 and 1 mode control	45C	GATE	C/T	M1	M0	GATE	C/T	M1	M0	00h
			28F	28E	28D	28C	28B	28A	289	288	
TSTAT*	Timer 0 and 1 extended status	411	–	–	–	–	–	T1OE	–	T0OE	00h
			2FF	2FE	2FD	2FC	2FB	2FA	2F9	2F8	
WDCON*	Watchdog control register	41F	PEW2	PRE1	PRE0	–	–	WDRUN	WDTOF	–	Note 6
WDL	Watchdog timer reload	45F									00h
WFEED1	Watchdog feed 1	45D									xx
WFEED2	Watchdog feed 2	45E									xx

NOTES:

* SFRs are bit addressable.

\# SFRs are modified from or added to XA-G3 SFRs.

1. At reset, the BCR is loaded with the binary value 00000a11, where “a’ is the value on the BUSW pin. This defaults the address bus size to 24 bits.
2. SFR is loaded from the reset vector.
3. All bits except F1, F0, and P are loaded from the reset vector. Those bits are all 0.
4. Unimplemented bits in SFRs are X (unknown) at all times. Ones should not be written to these bits since they may be used for other purposes in future XA derivatives. The reset value shown for these bits is 0.
5. Port configurations default to quasi-bidirectional when the XA begins execution from internal code memory after reset, based on the condition found on the $\overline{EA}$ pin. Thus, all PnCFGA registers will contain FF, and PnCFGB register will contain 00 when the XA begins execution using internal code memory. When the XA begins execution using external code memory, the default configuration for pins that are associated with the external bus will be push-pull. The PnCFGA and PnCFGB register contents will reflect this difference.
6. The WDCON reset value is E6 for a Watchdog reset, E4 for all other reset causes.
7. The RSTSRC register reflects the cause of the last XA-S3 reset. One bit will be set to 1, the others will be cleared to 0.
8. The XA guards writes to certain bits (typically interrupt flags) that may be altered directly by a peripheral function. This prevents loss of an interrupt or other status if a bit was written directly by a peripheral action during the time between the read and write portions of an instruction that performs a read-modify-write operation. Examples of such instructions are:

```
and     s0con,#$fb
clr     tr0
setb    ti_0
```

   XA-S3 SFR bits that are guarded in this manner are: ADINT (in ADCON); CF, CCF4, CCF3, CCF2, CCF1, and CCF0 (in CCON); SI (in I2CON); TI_0 and RI_0 (in S0CON); TI_1 and RI_1 (in S1CON); FE0, BR0, and OE0 (in S0STAT); FE1, BR1, and OE1 (in S1STAT); TF2 (in T2CON); TF1, TF0, IE1, and IE0 (in TCON); and WDTOF (in WDCON).
9. The XA-S3 implements an 8-bit SFR bus, as stated in *Chapter 8* of the *XA User Guide*. All SFR accesses must be 8-bit operations. Attempts to write 16 bits to an SFR will actually write only the lower 8 bits. Sixteen bit SFR reads will return undefined data in the upper byte.

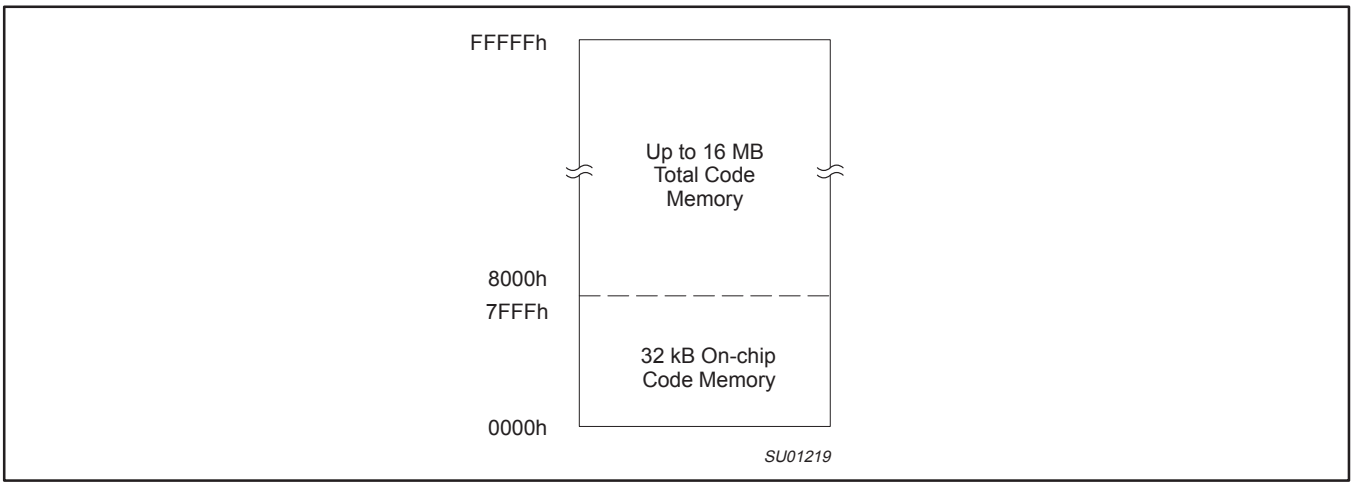

Figure 1. XA-S3 program memory map

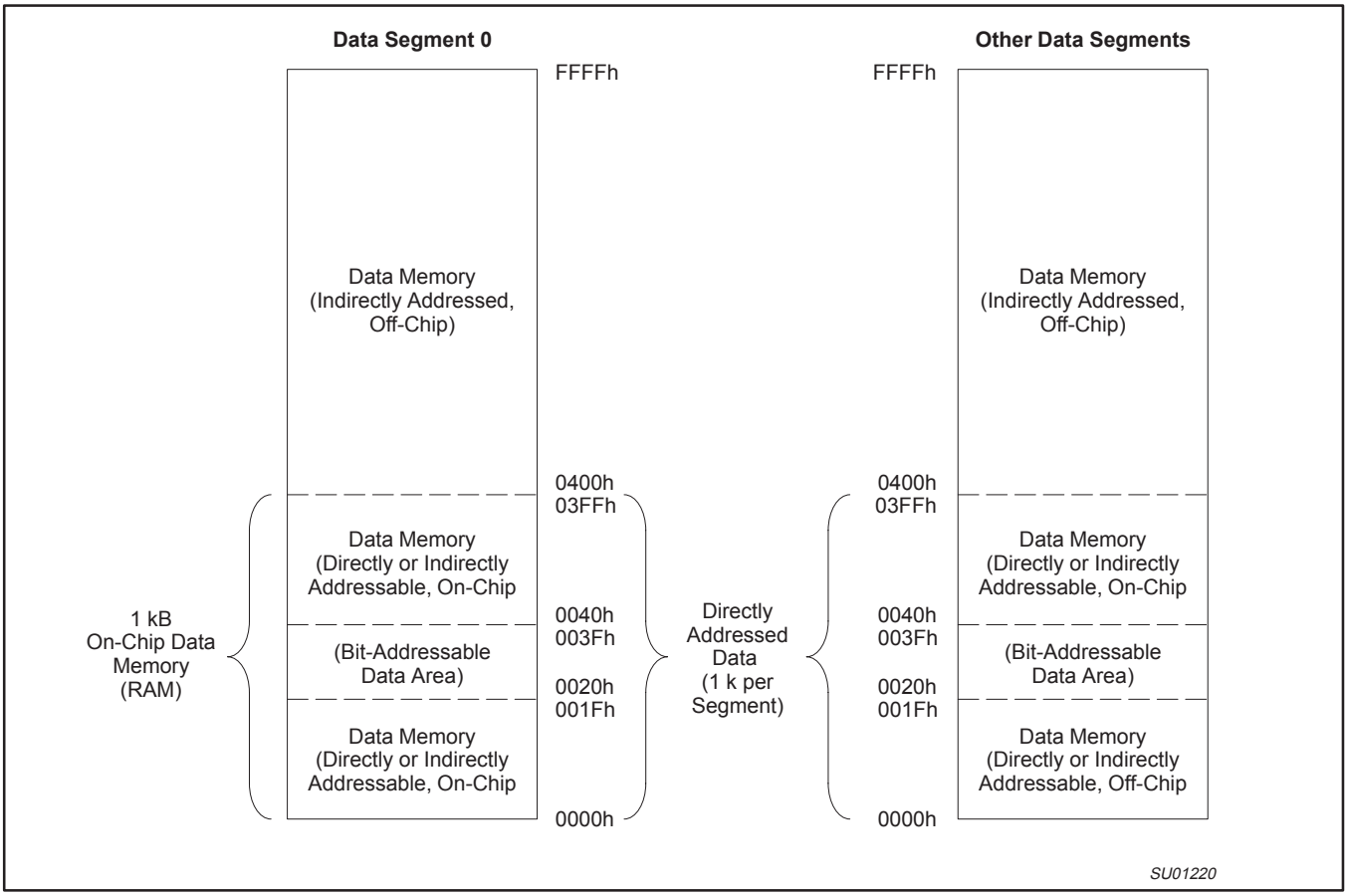

Figure 2. XA-S3 data memory map

FUNCTIONAL DESCRIPTION

Details of XA-S3 functions will be described in the following sections.

Analog to Digital converter

The XA-S3 has an 8-channel, 8-bit A/D converter with 8 sets of result registers, single scan and multiple scan operating modes. The A/D also has a 10-bit conversion mode that provides greater result resolution. The A/D input range is limited to 0 to AV_{DD} (3.3 V max.). The A/D inputs are on Port 5. Analog Power and Ground as well as AV_{REF+} and AV_{REF-} must be supplied in order for the A/D converter to be used. Prior to enabling the A/D converter or driving analog signals into the A/D inputs, the port configurations for the pins being used as A/D inputs must be set to the “off” (high impedance, input only) mode.

A/D timing can be adapted to the application clock frequency in order to provide the fastest possible conversion.

A/D converter operation is controlled through the ADCON (A/D Control) register, see Figure 1. Bits in ADCON start and stop the A/D, flag conversion completion, and select the converter operating modes. When 10-bit resolution is needed, the A/D mode may be set to give 10 result bits by setting the ADRES bit to 1. In this mode, the A/D takes longer to complete a conversion, and the timing must be set differently in ADCFG.

A/D Conversion Modes

The A/D converter supports a single scan mode and a continuous scan mode. In either mode, one or more A/D channels may be converted. The ADCS register determines which channels are converted. If the corresponding bit in the ADCS register is set, that channel is selected for conversions, otherwise that channel is skipped. The ADCS register is detailed in Figure 2.

For any A/D conversion, the results are stored in ADRSHn, corresponding to the A/D channel just converted. For a 10-bit conversion, the two least significant bits are read from the upper end of register ADRSL. These bits must be read before another conversion is begun.

A/D conversions are begun by setting the A/D Start and STatus bit in ADCON. In the single scan mode, all of the channels selected by bits in the ADCS register will be converted once. The ADINT flag is set when the last channel is converted. In the continuous scan mode, the A/D converter continuously converts all A/D channels selected by bits in the ADCS register. The ADINT flag is set when all channels have been converted once.

The A/D converter can generate an interrupt when the ADINT flag is set. This will occur if the A/D interrupt is enabled (via the EAD bit in IEL), the interrupt system is enabled (via the EA bit in IEL), and the A/D interrupt priority (specified in IPA3 bits 3 to 0) is higher than the currently running code (PSW bits IM3 through IM0) and any other pending interrupt. ADINT must be cleared by software.

A/D Timing Configuration

The A/D sampling and conversion timing may be optimized for the particular oscillator frequency and input drive characteristics of the application. Because A/D operation is mostly dependent on real-time effects (charging time of sampling capacitors, settling time of the comparator, etc.), A/D conversion times are not necessarily much longer at slower clock frequencies. The A/D timing is controlled by the ADCFG register, as shown in Figure 3, Table 2 and Table 3.

The primary effect of ADCFG settings is to adjust the A/D sample and hold time to be relatively constant over various clock frequencies. Two settings (value 6 and B) are provided to allow fast conversions with a lower external source driving the A/D inputs. These settings provide double the sample time at the same frequency. Of course, settings intended for lower frequencies may also be used at higher frequencies in order to increase the A/D sampling time, but this method has the side effect of significantly increasing A/D conversion times.

ADCON Address:43Eh
Bit Addressable
Reset Value: 00h

MSB							LSB
—	—	—	—	ADRES	ADMOD	ADSST	ADINT

BIT	SYMBOL	FUNCTION
ADCON.7	—	Reserved for future use. Should not be set to 1 by user programs.
ADCON.6	—	Reserved for future use. Should not be set to 1 by user programs.
ADCON.5	—	Reserved for future use. Should not be set to 1 by user programs.
ADCON.4	—	Reserved for future use. Should not be set to 1 by user programs.
ADCON.3	ADRES	Selects 8-bit (0) or 10-bit (1) conversion mode.
ADCON.2	ADMOD	A/D mode select. 1 = continuous scan of selected inputs after a start of the A/D. 0 = single scan of selected inputs after a start of the A/D.
ADCON.1	ADSST	A/D start and status. Setting this bit by software starts the A/D conversion of the selected A/D inputs. ADSST remains set as long as the A/D is in operation. In continuous conversion mode, ADSST will remain set unless the A/D is stopped by software. While ADSST is set, new start commands are ignored. An A/D conversion is progress may be aborted by software clearing ADSST.
ADCON.0	ADINT	A/D conversion complete/interrupt flag. This flag is set when all selected A/D channels are converted in either the single scan or continuous scan modes. Must be cleared by software.

SU01229

Figure 1. A/D Control Register (ADCON)

ADCS Address:43Fh
Bit Addressable
Reset Value: 00h

MSB							LSB
ADCS7	ADCS6	ADCS5	ADCS4	ADCS3	ADCS2	ADCS1	ADCS0

BIT	SYMBOL	FUNCTION
ADCS.7	ADCS7	A/D channel 7 select bit.
ADCS.6	ADCS6	A/D channel 6 select bit.
ADCS.5	ADCS5	A/D channel 5 select bit.
ADCS.4	ADCS4	A/D channel 4 select bit.
ADCS.3	ADCS3	A/D channel 3 select bit.
ADCS.2	ADCS2	A/D channel 2 select bit.
ADCS.1	ADCS1	A/D channel 1 select bit.
ADCS.0	ADCS0	A/D channel 0 select bit.

SU00939

Figure 2. A/D Channel Select Register (ADCS)

ADCFG Address:4B9h
Not bit Addressable
Reset Value: 00h

MSB					LSB
—	—	—	—	A/D Timing Configuration	

BIT	SYMBOL	FUNCTION
ADCFG.7	—	Reserved for future use. Should not be set to 1 by user programs.
ADCFG.6	—	Reserved for future use. Should not be set to 1 by user programs.
ADCFG.5	—	Reserved for future use. Should not be set to 1 by user programs.
ADCFG.4	—	Reserved for future use. Should not be set to 1 by user programs.
ADCFG.3–0	ADCFG	A/D timing configuration (see text and table).

SU00940

Figure 3. A/D Timing Configuration Register (ADCFG)

Table 2. A/D Timing Configuration

ADCFG.3–0	Max. Oscillator Frequency (MHz)	Conversion Time		Sampling Time (Osc. Clocks)
		Osc. Clocks	µsec at max. Osc.	
0h (0000)	6.66	72	10.81	4
1h (0001)	10	76	7.6	6
2h (0010)	11.11	80	7.2	8
3h (0011)	13.33	96	7.2	8
4h (0100)	16.66	100	6.0	10
5h (0101)	20	104	5.2	12
6h (0110)[1]	20	116	5.8	24
7h (0111)	22.2	108	4.86	14
8h (1000)	23.3	124	5.32	14
9h (1001)	26.6	128	4.81	16
Ah (1010)	30	132	4.4	18
Bh (1011)[1]	30	146	4.87	32
Ch (1100)	–	136	4.25	20
Dh (1101)	–	152	4.56	20
Eh (1110)	–	172	4.7	22
Fh (1111)	–	176	4.4	24

NOTE:
1. These settings provide additional A/D input sampling time, in order to allow accurate readings with a higher external sourceimpedance.

Table 3. A/D Timing Configuration for 10-bit Mode

ADCFG.3–0	Max. Oscillator Frequency (MHz)	Conversion Time		Sampling Time (Osc. Clocks)
		Osc. Clocks	μsec at max. Osc.	
0h (0000)	6.66	88	13.21	4
1h (0001)	8	92	9.2	6
2h (0010)	8	96	8.64	8
3h (0011)	12	116	8.7	8
4h (0100)	12	120	7.2	10
5h (0101)	12	124	6.2	12
6h (0110)	12	136	6.8	24
7h (0111)	12	128	5.77	14
8h (1000)	13	148	6.35	14
9h (1001)	13	152	5.71	16
Ah (1010)	13	156	5.2	18
Bh (1011)	13	170	5.67	32
Ch (1100)	13	160	5.0	20
Dh (1101)	16	180	5.41	20
Eh (1110)	20	204	5.57	22
Fh (1111)	20	208	5.2	24

A/D Inputs

In order to obtain accurate measurements with the A/D Converter, the source drive must be sufficient to adequately charge the sampling capacitor during the sampling time. Figure 4 shows the equivalent resistance and capacitance related to the A/D inputs. A/D timing configurations indicated in Table 1 allow for full A/D accuracy (according to the A/D specifications) assuming a source resistance of less than or equal to 20kΩ. Larger source resistances may be accommodated by increasing the sampling time with a different A/D timing configuration.

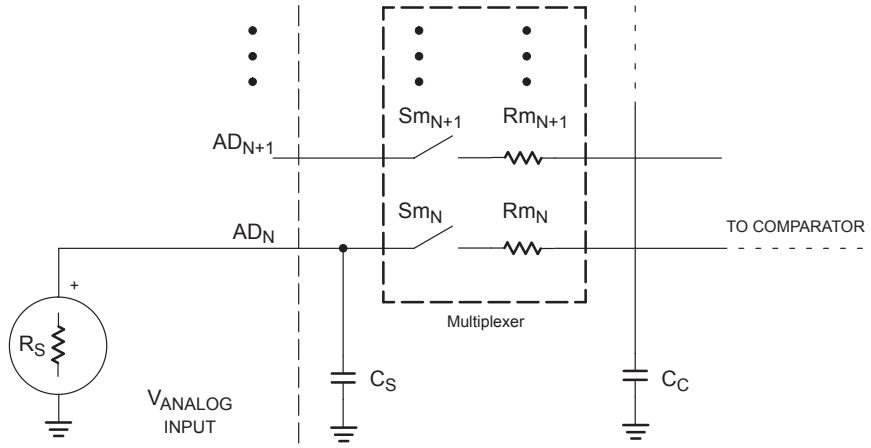

R_m (multiplexer resistance) = 3 kΩ maximum
C_S (pin capacitance) = 10 pF maximum
C_C (sampling capacitor) = 2 pF maximum
R_S (source resistance) = Recommended less than 20kΩ for full specified accuracy. This allows time for the sampling capacitor (C_C) to fully charge while the multiplexer switch is closed. Please note that sampling causes the analog input to present a varying load to the pin.

SU00948

Figure 4. A/D Input: Equivalent Circuit

A/D Accuracy

The XA-S3 A/D in 10 -bit mode is specified with 16 samples averaged in order to factor out on-chip noise. In an application where averaging 16 samples is not practical, the accuracy specifications may be de-rated according to the number of samples that are actually taken. The graph in Figure 5 shows the relationship of additional A/D error to the number of samples that are averaged. For example, if a single A/D reading is used with no averaging, the A/D accuracy should be de-rated by ±1.25 LSB.

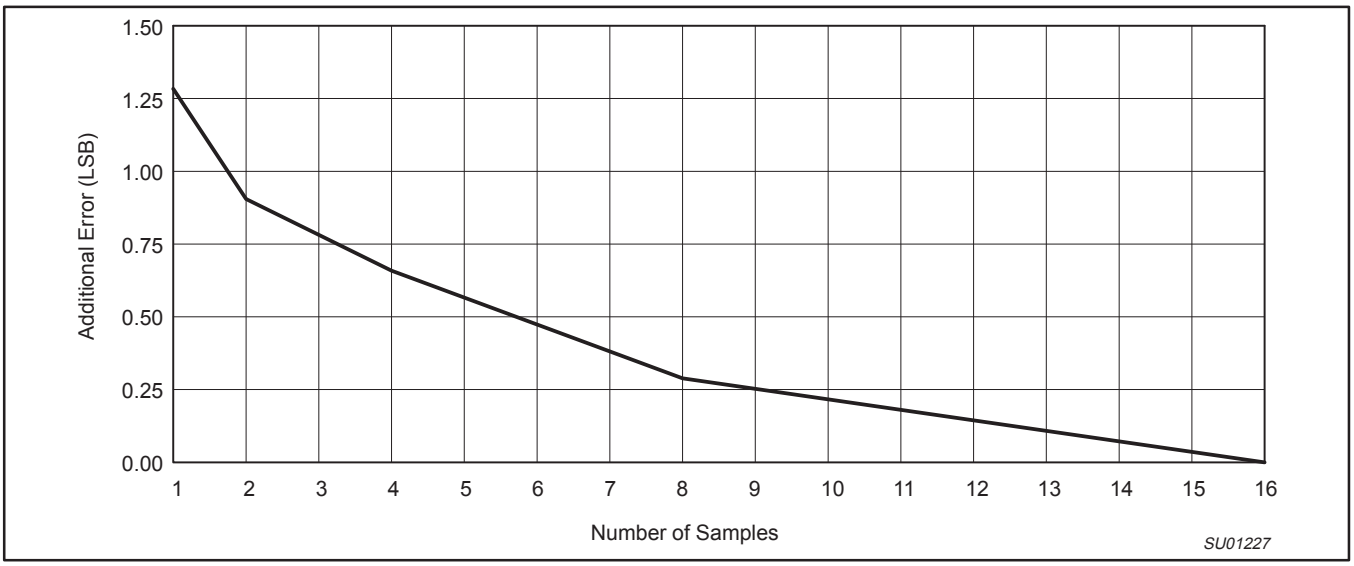

Figure 5. A/D accuracy by number of averaging samples
(Pertains to 10-bit mode only. Note that 10-bit mode is only specified up to f_C = 20 MHz.)

I2CON Address:42Ch
Bit Addressable
Reset Value: 00h

MSB							LSB
CR2	ENA	STA	STO	SI	AA	CR1	CR0

BIT	SYMBOL	FUNCTION
I2CON.7	CR2	I^2C Rate Control, with CR1 and CR0. See text and table.
I2CON.6	ENA	Enable I^2C port. When ENA = 1, the I^2C port is enabled.
I2CON.5	STA	Start flag. Setting STA to 1 causes the I^2C interface to attempt to gain mastership of the bus by generating a Start condition.
I2CON.4	STO	Stop flag. Setting STO to 1 causes the I^2C interface to attempt to generate a Stop condition.
I2CON.3	SI	Serial Interrupt. SI is set by the I^2C hardware when a new I^2C state is entered, indicating that software needs to respond. SI causes an I^2C interrupt if enabled and of sufficient priority.
I2CON.2	AA	Assert Acknowledge. Setting AA to 1 causes the I^2C hardware to automatically generate acknowledge pulses for various conditions (see text).
I2CON.1	CR1	I^2C Rate Control, with CR2 and CR0. See text and table.
I2CON.0	CR0	I^2C Rate Control, with CR2 and CR1. See text and table.

SU00941

Figure 6. I^2C Control Register (I2CON)

I2C Interface

The I2C interface on the XA-S3 is identical to the standard byte-style I2C interface found on devices such as the 8xC552 except for the rate selection. ***The I2C interface conforms to the 100 kHz I2C specification, but may be used at rates up to 400 kHz (non-conforming).***

Important: Before the I2C interface may be used, the port pins P5.6 and 5.7, which correspond to the I2C functions SCL and SDA respectively, must be set to the open drain mode.

The processor interfaces to the I2C logic via the following four special function registers: I2CON (I2C control register), I2STA (I2C status register), I2DAT (I2C data register), and I2ADR (I2C slave address register). The I2C control logic interfaces to the external I2C bus via two port 5 pins: P5.6/SCL (serial clock line) and P5.7/SDA (serial data line).

The Control Register, I2CON

This register is shown in Figure 6. Two bits are affected by the I2C hardware: the SI bit is set when a serial interrupt is requested, and the STO bit is cleared when a STOP condition is present on the I2C bus. The STO bit is also cleared when ENA = “0”.

ENA, the I2C Enable Bit

ENA = 0: When ENA is “0”, the SDA and SCL outputs are not driven. SDA and SCL input signals are ignored, SIO1 is in the “not addressed” slave state, and the STO bit in I2CON is forced to “0”. No other bits are affected. P5.6 and P5.7 may be used as open drain I/O ports.

ENA = 1: When ENA is “1”, SIO1 is enabled. The P5.6 and P5.7 port latches must be set to logic 1.

ENA should not be used to temporarily release the I2C-bus since, when ENA is reset, the I2C-bus status is lost. The AA flag should be used instead (see description of the AA flag in the following text).

In the following text, it is assumed the ENA = “1”.

STA, the START flag

STA = 1: When the STA bit is set to enter a master mode, the I2C hardware checks the status of the I2C bus and generates a START condition if the bus is free. If the bus is not free, the I2C interface waits for a STOP condition (which will free the bus) and generates a START condition after a delay of a half clock period of the internal serial clock generator.

If STA is set while the I2C interface is already in a master mode and one or more bytes are transmitted or received, the hardware transmits a repeated START condition. STA may be set at any time. STA may also be set when the I2C interface is an addressed slave.

STA = 0: When the STA bit is reset, no START condition or repeated START condition will be generated.

STO, the STOP flag

STO = 1: When the STO bit is set while the I2C interface is in a master mode, a STOP condition is transmitted to the I2C bus. When the STOP condition is detected on the bus, the hardware clears the STO flag. In a slave mode, the STO flag may be set to recover from an error condition. In this case, no STOP condition is transmitted to the I2C bus. However, the hardware behaves as if a STOP condition has been received and switches to the defined “not addressed” slave receiver mode. The STO flag is automatically cleared by hardware.

If the STA and STO bits are both set, then a STOP condition is transmitted to the I2C bus if the interface is in a master mode (in a slave mode, the hardware generates an internal STOP condition which is not transmitted). The I2C interface then transmits a START condition.

STO = 0: When the STO bit is reset, no STOP condition will be generated.

SI, the Serial Interrupt flag

SI = 1: When the SI flag is set, and the EA (interrupt system enable) and EI2 (I2C interrupt enable) bits are also set, an I2C interrupt is requested. SI is set by hardware when one of 25 of the 26 possible I2C interface states is entered. The only state that does not cause SI to be set is state F8H, which indicates that no relevant state information is available.

While SI is set, the low period of the serial clock on the SCL line is stretched, and the serial transfer is suspended. A high level on the SCL line is unaffected by the serial interrupt flag. SI must be reset by software.

SI = 0: When the SI flag is reset, no serial interrupt is requested, and there is no stretching of the serial clock on the SCL line.

AA, the Assert Acknowledge flag

AA = 1: If the AA flag is set, an acknowledge (low level to SDA) will be returned during the acknowledge clock pulse on the SCL line when:

- The “own slave address” has been received.
- The general call address has been received while the general call bit (GC) in I2ADR is set.
- A data byte has been received while the I2C interface is in the master receiver mode.
- A data byte has been received while the I2C interface is in the addressed slave receiver mode.

AA = 0: If the AA flag is reset, a not acknowledge (high level to SDA) will be returned during the acknowledge clock pulse on the SCL line when:

- A data byte has been received while the I2C interface is in the master receiver mode.
- A data byte has been received while the I2C interface is in the addressed slave receiver mode.

When the I2C interface is in the addressed slave transmitter mode, state C8H will be entered after the last serial data byte is transmitted. When SI is cleared, the I2C interface leaves state C8H, enters the not addressed slave receiver mode, and the SDA line remains at a high level. In state C8H, the AA flag can be set again for future address recognition.

When the I2C interface is in the not addressed slave mode, its own slave address and the general call address are ignored. Consequently, no acknowledge is returned, and a serial interrupt is not requested. Thus, the hardware can be temporarily released from the I2C bus while the bus status is monitored. While the hardware is released from the bus, START and STOP conditions are detected, and serial data is shifted in. Address recognition can be resumed at any time by setting the AA flag. If the AA flag is set when the part’s own slave address or the general call address has been partly received, the address will be recognized at the end of the byte transmission.

CR0, CR1, and CR2, the Clock Rate Bits

These three bits determine the serial clock frequency when the I2C interface is in a master mode. An I2C rate of 100kHz or lower is typical and can be derived from many oscillator frequencies. The various serial rates are shown in Table 4. A variable bit rate may also be used if Timer 1 is not required for any other purpose while the I2C hardware is in a master mode. The frequencies shown in Table 4 are unimportant when the I2C hardware is in a slave mode. In the slave modes, the hardware will automatically synchronize with the incoming clock frequency.

The I2C Status Register, I2STA

I2STA is an 8-bit read-only special function register. The three least significant bits are always zero. The five most significant bits contain the status code. There are 26 possible status codes. When I2STA contains F8H, no relevant state information is available and no serial interrupt is requested. All other I2STA values correspond to defined hardware interface states. When each of these states is entered, a serial interrupt is requested (SI = “1”).

NOTE: A detailed I2C interface description and usage information, including example driver code, will be provided in a separate document.

Table 4. I2C Rate Control

Frequency Select (CR2, CR1, CR0)	Clock Divisor	Example I2C Rates at Specific Oscillator Frequencies					
		8 MHz	12 MHz	16 MHz	20 MHz	24 MHz	30 MHz
0h (0000)	20	(400)[1]	–	–	–	–	–
1h (0001)	40	(200)[1]	(300)[1]	(400)[1]	–	–	–
2h (0010)	68	(116.65)[1]	(176.46)[1]	(235.29)[1]	(294.12)[1]	(352.94)[1]	–
3h (0011)	88	90.91	(136.36)[1]	(181.82)[1]	(227.27)[1]	(272.73)[1]	(340.91)[1]
4h (0100)	160	50	75	100	(125)[1]	(150)[1]	(187.5)[1]
5h (0101)	272	29.41	44.12	58.82	73.53	88.24	(110.29)[1]
6h (0110)	352	22.73	34.09	45.45	56.82	68.18	85.23
7h (0111)	(Timer 1)[2]	(Timer 1)[2]	(Timer 1)[2]	(Timer 1)[2]	(Timer 1)[2]	(Timer 1)[2]	(Timer 1)[2]

NOTES:

1. The XA-S3 I2C interface does not conform to the 400kHz I2C specification (which applies to rates greater than 100kHz) in all details, but may be used with care where higher rates are required by the application.
2. The timer 1 overflow is used to clock the I2C interface. The resulting bit rate is 1/2 of the timer overflow rate.

XA-S3 Timer/Counters

The XA-S3 has three general purpose counter/timers, two of which may also be used as baud rate generators for either or both of the UARTs.

Timer 0 and 1

These are identical to the standard XA-G3 timer 0 and 1.

Timer 2

This is identical to the standard XA-G3 timer 2.

Programmable Counter Array (PCA)

The Programmable Counter Array available on the XA-S3 is a special 16-bit Timer that has five 16-bit capture/compare modules associated with it. Each of the modules can be programmed to operate in one of four modes: rising and/or falling edge capture, software timer, high-speed output, or pulse width modulator. Each module has a pin associated with it in port 1. Module 0 is connected to P4.1(CEX0), module 1 to P4.2(CEX1), etc. The basic PCA configuration is shown in Figure 7.

The PCA timer is a common time base for all five modules and can be programmed to run at: the TCLK rate (Osc/4, Osc/16, or Osc/64), the Timer 0 overflow, or the input on the ECI pin (P4.0). When the ECI input is used, the falling edge clocks the PCA counter. The timer count source is determined from the CPS1 and CPS0 bits in the CMOD SFR as follows (see Figure 10):

CPS1	CPS0	PCA Timer Count Source
0	X	TCLK (Osc/4, Osc/16, or Osc/64)
1	0	Timer 0 overflow
1	1	ECI (PCA External Clock Input (max rate = Osc/4)

In the CMOD SFR are three additional bits associated with the PCA. They are CIDL which allows the PCA to stop during idle mode, WDTE which enables or disables the watchdog function on module 4, and ECF which when set causes an interrupt and the PCA overflow flag CF (in the CCON SFR) to be set when the PCA timer overflows. These functions are shown in Figure 8. In addition, each PCA module may generate a separate interrupt.

The watchdog timer function is implemented in module 4 (see Figure 17).

The CCON SFR contains the run control bit for the PCA and the flags for the PCA timer (CF) and each module (refer to Figure 11). To run the PCA the CR bit (CCON.6) must be set by software. The PCA is shut off by clearing this bit. The CF bit (CCON.7) is set when the PCA counter overflows and an interrupt will be generated if the ECF bit in the CMOD register is set, The CF bit can only be cleared by software. Bits 0 through 4 of the CCON register are the flags for the modules (bit 0 for module 0, bit 1 for module 1, etc.) and are set by hardware when either a match or a capture occurs. These flags also can only be cleared by software. The PCA interrupt system shown in Figure 9.

Each module in the PCA has a special function register associated with it. These registers are: CCAPM0 for module 0, CCAPM1 for module 1, etc. (see Figure 12). The registers contain the bits that control the mode that each module will operate in. The ECCF bit (CCAPMn.0 where n=0, 1, 2, 3, or 4 depending on the module) enables the CCF flag in the CCON SFR to generate an interrupt when a match or compare occurs in the associated module. PWM (CCAPMn.1) enables the pulse width modulation mode. The TOG bit (CCAPMn.2) when set causes the CEX output associated with the module to toggle when there is a match between the PCA counter and the module's capture/compare register. The match bit MAT (CCAPMn.3) when set will cause the CCFn bit in the CCON register to be set when there is a match between the PCA counter and the module's capture/compare register.

The next two bits CAPN (CCAPMn.4) and CAPP (CCAPMn.5) determine the edge that a capture input will be active on. The CAPN bit enables the negative edge, and the CAPP bit enables the positive edge. If both bits are set both edges will be enabled and a capture will occur for either transition. The last bit in the register ECOM (CCAPMn.6) when set enables the comparator function. Figure 13 shows the CCAPMn settings for the various PCA functions.

There are two additional registers associated with each of the PCA modules. They are CCAPnH and CCAPnL and these are the registers that store the 16-bit count when a capture occurs or a compare should occur. When a module is used in the PWM mode these registers are used to control the duty cycle of the output.

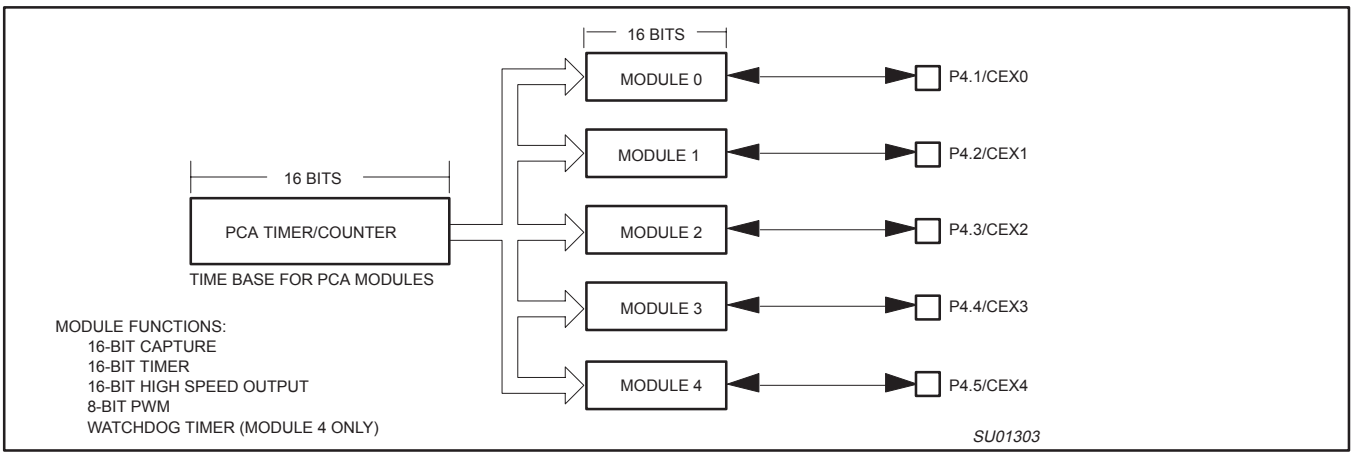

Figure 7. Programmable Counter Array (PCA)

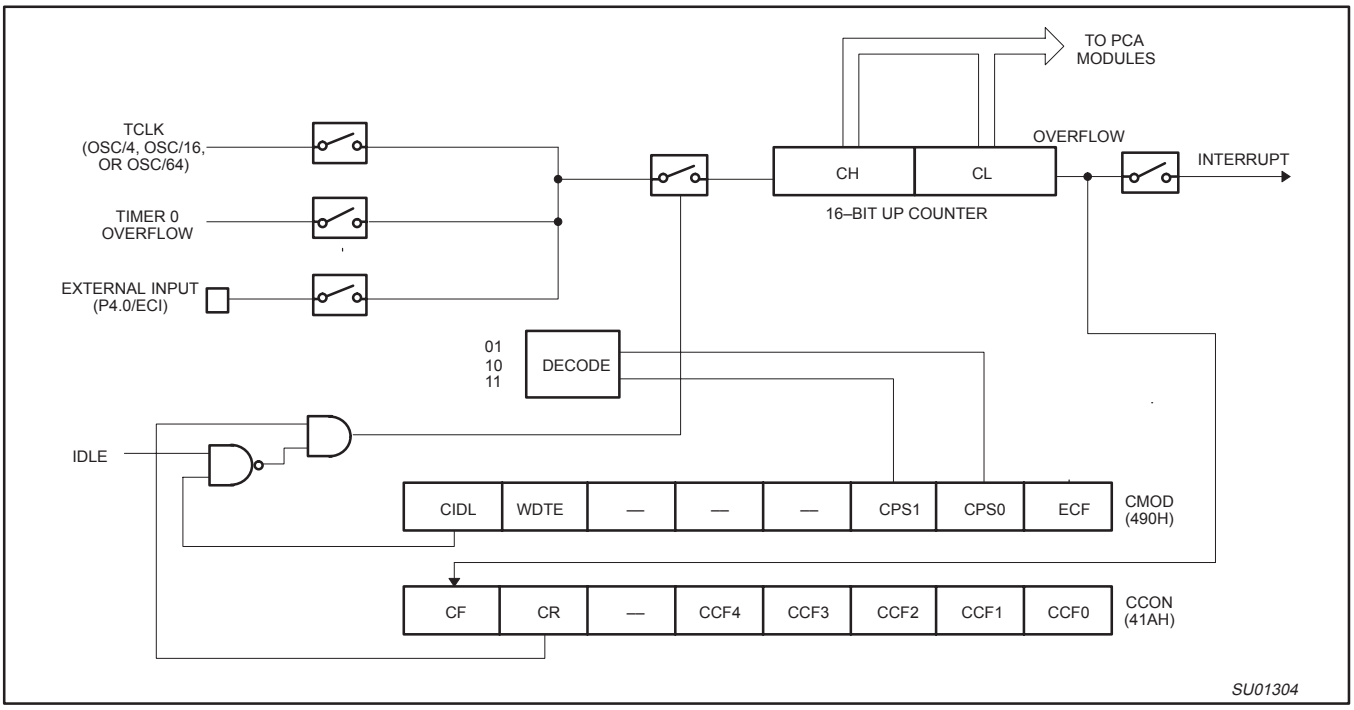

Figure 8. PCA Timer/Counter

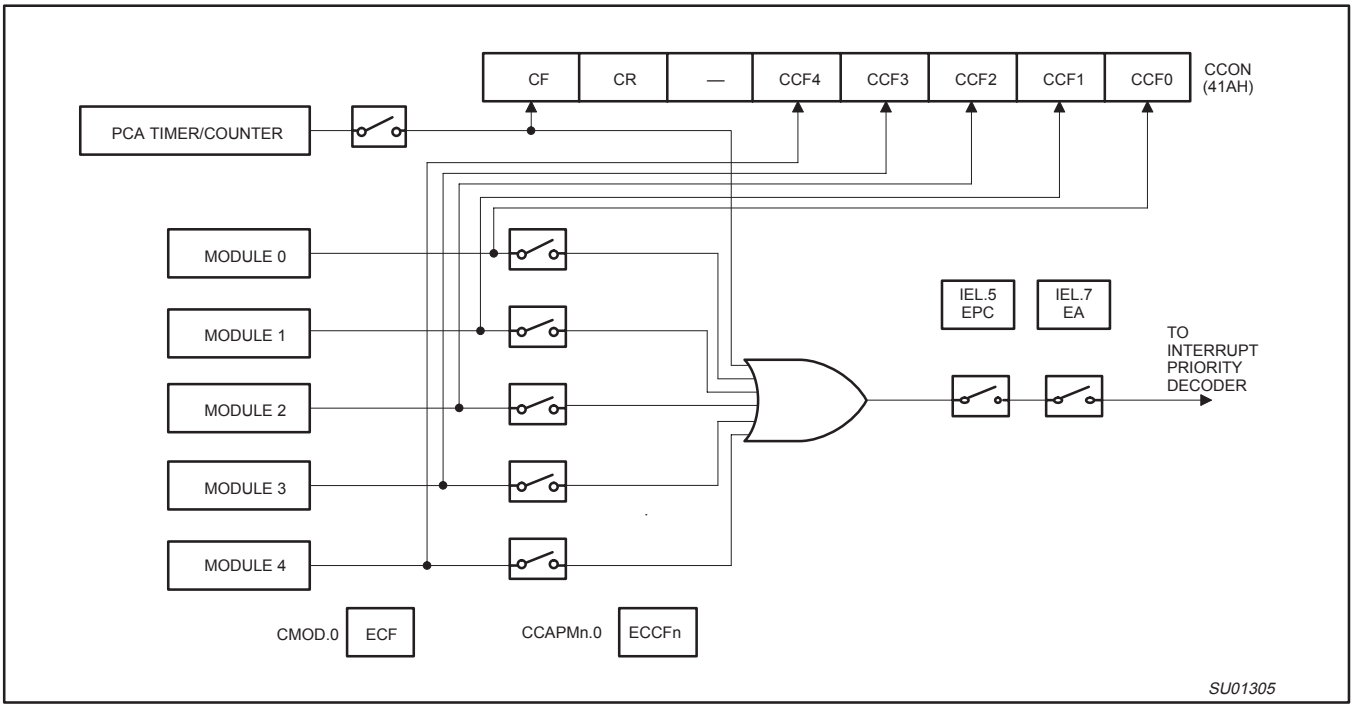

Figure 9. PCA Interrupt System

CMOD Address = 490H Reset Value = 00H

	CIDL	WDTE	–	–	–	CPS1	CPS0	ECF
Bit:	7	6	5	4	3	2	1	0

Symbol	Function
CIDL	Counter Idle control: CIDL = 0 programs the PCA Counter to continue functioning during idle Mode. CIDL = 1 programs it to be gated off during idle.
WDTE	Watchdog Timer Enable: WDTE = 0 disables Watchdog Timer function on PCA Module 4. WDTE = 1 enables it.
–	Not implemented, reserved for future use.*
CPS1	PCA Count Pulse Select bit 1.
CPS0	PCA Count Pulse Select bit 0.

CPS1	CPS0	PCA Timer Count Source
0	X	TClk (Osc/4, Osc/16, or Osc/64)
1	0	Timer 0 overflow
1	1	ECI (PCA External Clock Input (max rate = Osc/4)

ECF	PCA Enable Counter Overflow interrupt: ECF = 1 enables CF bit in CCON to generate an interrupt. ECF = 0 disables that function of CF.

NOTE:
* User software should not write 1s to reserved bits. These bits may be used in future products to invoke new features. In that case, the reset or inactive value of the new bit will be 0, and its active value will be 1. The value read from a reserved bit is indeterminate.
** f_{OSC} = oscillator frequency

SU01306

Figure 10. CMOD: PCA Counter Mode Register

CCON Address = 41AH Reset Value = 00H

Bit Addressable

	CF	CR	–	CCF4	CCF3	CCF2	CCF1	CCF0
Bit:	7	6	5	4	3	2	1	0

Symbol	Function
CF	PCA Counter Overflow flag. Set by hardware when the counter rolls over. CF flags an interrupt if bit ECF in CMOD is set. CF may be set by either hardware or software but can only be cleared by software.
CR	PCA Counter Run control bit. Set by software to turn the PCA counter on. Must be cleared by software to turn the PCA counter off.
–	Not implemented, reserved for future use*.
CCF4	PCA Module 4 interrupt flag. Set by hardware when a match or capture occurs. Must be cleared by software.
CCF3	PCA Module 3 interrupt flag. Set by hardware when a match or capture occurs. Must be cleared by software.
CCF2	PCA Module 2 interrupt flag. Set by hardware when a match or capture occurs. Must be cleared by software.
CCF1	PCA Module 1 interrupt flag. Set by hardware when a match or capture occurs. Must be cleared by software.
CCF0	PCA Module 0 interrupt flag. Set by hardware when a match or capture occurs. Must be cleared by software.

Each of CCF4 through CCF0 generates its own interrupt, and has its own interrupt vector.

NOTE:
* User software should not write 1s to reserved bits. These bits may be used in future products to invoke new features. In that case, the reset or inactive value of the new bit will be 0, and its active value will be 1. The value read from a reserved bit is indeterminate.

SU01307

Figure 11. CCON: PCA Counter Control Register

CCAPMn Address

CCAPM0	491H
CCAPM1	492H
CCAPM2	493H
CCAPM3	494H
CCAPM4	495H

Reset Value = 00H

Not Bit Addressable

	–	ECOMn	CAPPn	CAPNn	MATn	TOGn	PWMn	ECCFn
Bit:	7	6	5	4	3	2	1	0

Symbol	Function
–	Not implemented, reserved for future use*.
ECOMn	Enable Comparator. ECOMn = 1 enables the comparator function.
CAPPn	Capture Positive, CAPPn = 1 enables positive edge capture.
CAPNn	Capture Negative, CAPNn = 1 enables negative edge capture.
MATn	Match. When MATn = 1, a match of the PCA counter with this module's compare/capture register causes the CCFn bit in CCON to be set, flagging an interrupt.
TOGn	Toggle. When TOGn = 1, a match of the PCA counter with this module's compare/capture register causes the CEXn pin to toggle.
PWMn	Pulse Width Modulation Mode. PWMn = 1 enables the CEXn pin to be used as a pulse width modulated output.
ECCFn	Enable CCF interrupt. Enables compare/capture flag CCFn in the CCON register to generate an interrupt.

NOTE:
*User software should not write 1s to reserved bits. These bits may be used in future products to invoke new features. In that case, the reset or inactive value of the new bit will be 0, and its active value will be 1. The value read from a reserved bit is indeterminate.

SU01308

Figure 12. CCAPMn: PCA Modules Compare/Capture Registers

–	ECOMn	CAPPn	CAPNn	MATn	TOGn	PWMn	ECCFn	MODULE FUNCTION
X	0	0	0	0	0	0	0	No operation
X	X	1	0	0	0	0	X	16-bit capture by a positive-edge trigger on CEXn
X	X	0	1	0	0	0	X	16-bit capture by a negative trigger on CEXn
X	X	1	1	0	0	0	X	16-bit capture by a transition on CEXn
X	1	0	0	1	0	0	X	16-bit Software Timer
X	1	0	0	1	1	0	X	16-bit High Speed Output
X	1	0	0	0	0	1	0	8-bit PWM
X	1	0	0	1	X	0	X	Watchdog Timer

Figure 13. PCA Module Modes (CCAPMn Register)

PCA Capture Mode
To use one of the PCA modules in the capture mode either one or both of the CCAPM bits CAPN and CAPP for that module must be set. The external CEX input for the module (on port 1) is sampled for a transition. When a valid transition occurs the PCA hardware loads the value of the PCA counter registers (CH and CL) into the module's capture registers (CCAPnL and CCAPnH). If the CCFn bit for the module in the CCON SFR and the ECCFn bit in the CCAPMn SFR are set then an interrupt will be generated. Refer to Figure 14.

16-bit Software Timer Mode
The PCA modules can be used as software timers by setting both the ECOM and MAT bits in the modules CCAPMn register. The PCA timer will be compared to the module's capture registers and when a match occurs an interrupt will occur if the CCFn (CCON SFR) and the ECCFn (CCAPMn SFR) bits for the module are both set (see Figure 15).

High Speed Output Mode
In this mode the CEX output (on port 4) associated with the PCA module will toggle each time a match occurs between the PCA counter and the module's capture registers. To activate this mode the TOG, MAT, and ECOM bits in the module's CCAPMn SFR must be set (see Figure 16).

Pulse Width Modulator Mode
All of the PCA modules can be used as PWM outputs. Figure 17 shows the PWM function. The frequency of the output depends on the source for the PCA timer. All of the modules will have the same frequency of output because they all share the PCA timer. The duty cycle of each module is independently variable using the module's capture register CCAPLn. When the value of the PCA CL SFR is less than the value in the module's CCAPLn SFR the output will be low, when it is equal to or greater than the output will be high. When CL overflows from FF to 00, CCAPLn is reloaded with the value in CCAPHn. the allows updating the PWM without glitches. The PWM and ECOM bits in the module's CCAPMn register must be set to enable the PWM mode.

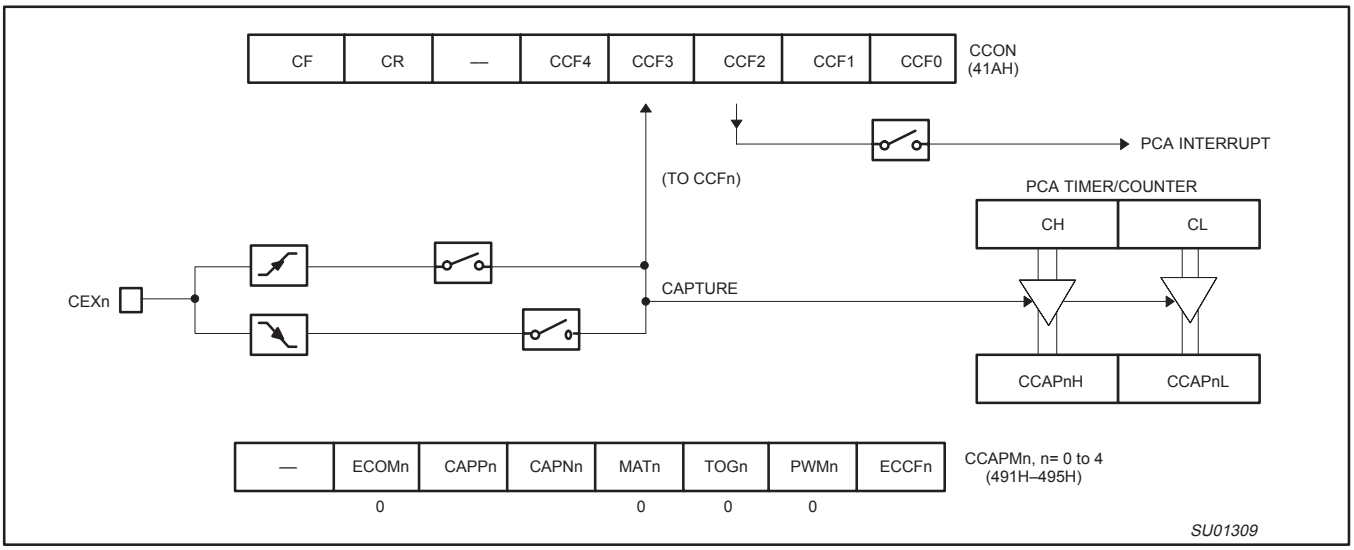

Figure 14. PCA Capture Mode

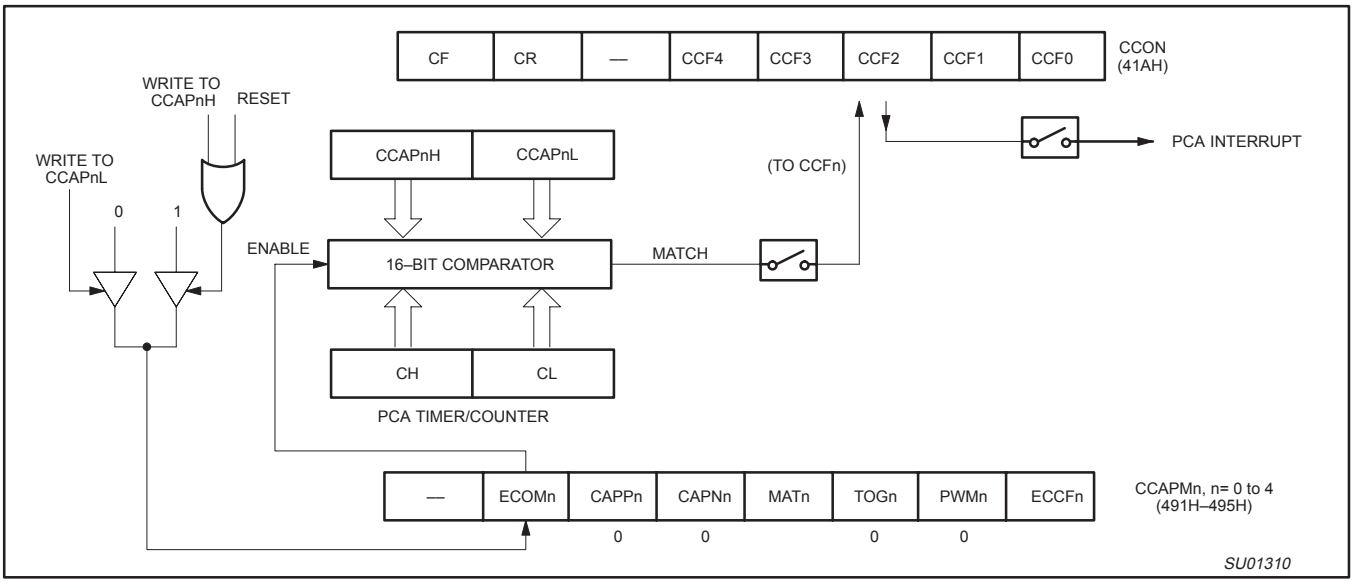

Figure 15. PCA Compare Mode

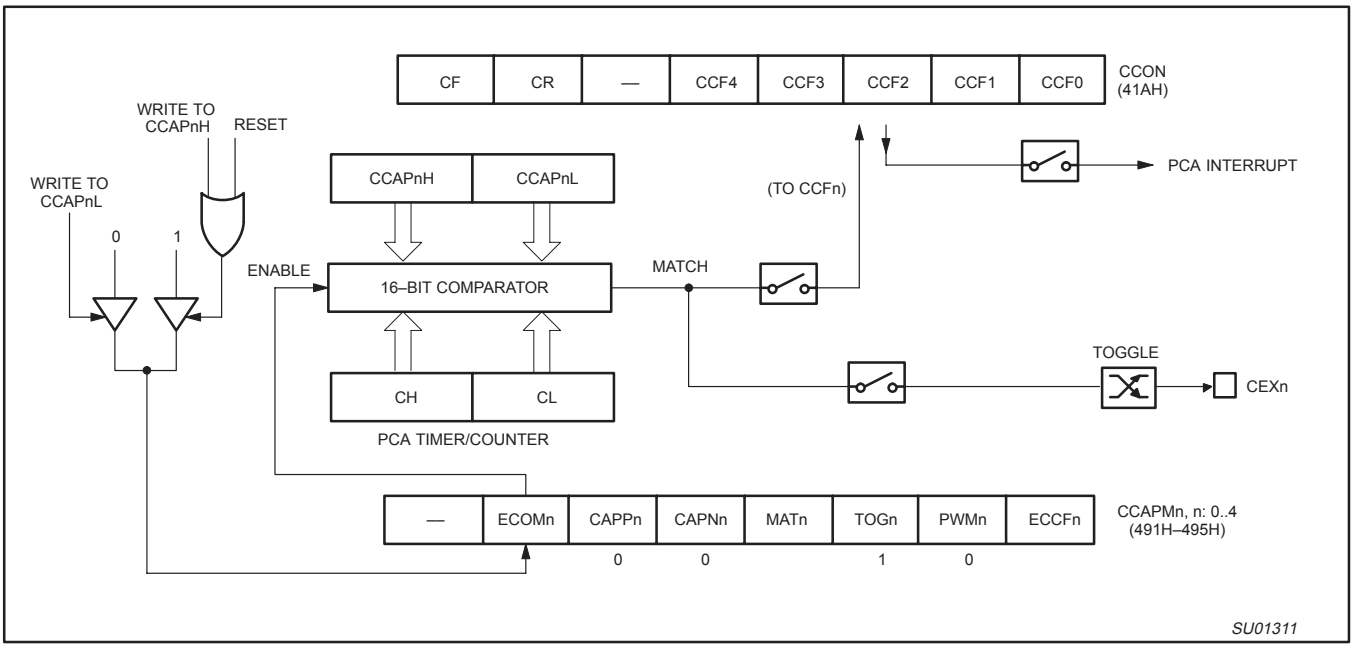

Figure 16. PCA High Speed Output Mode

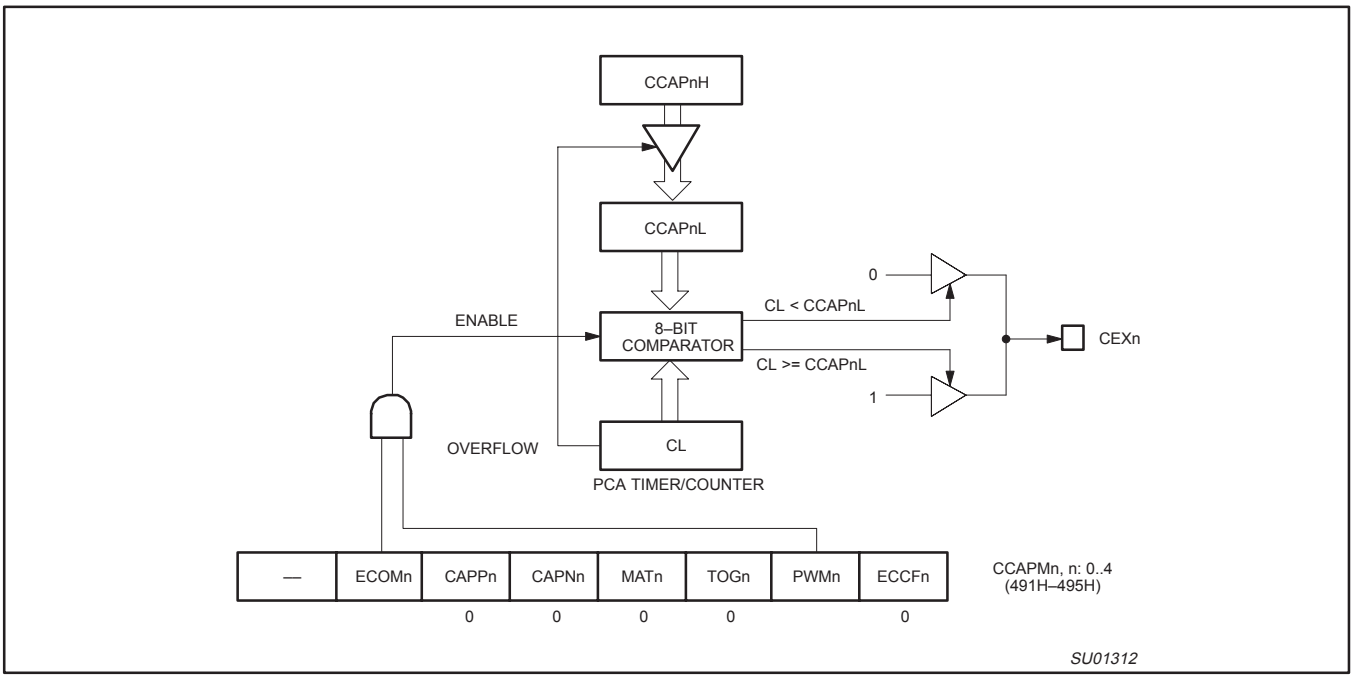

Figure 17. PCA PWM Mode

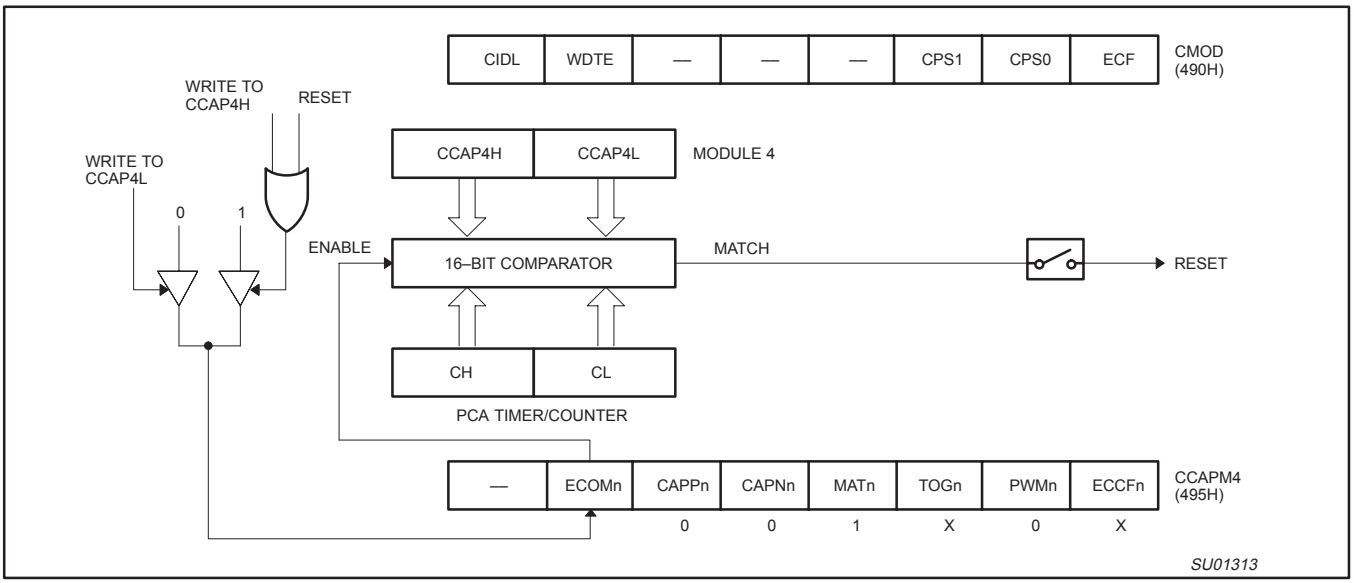

Figure 18. PCA Watchdog Timer m(Module 4 only)

PCA Watchdog Timer

An on-board watchdog timer is available with the PCA to improve the reliability of the system without increasing chip count. Watchdog timers are useful for systems that are susceptible to noise, power glitches, or electrostatic discharge. Module 4 is the only PCA module that can be programmed as a watchdog. However, this module can still be used for other modes if the watchdog is not needed.

Figure 18 shows a diagram of how the watchdog works. The user pre-loads a 16-bit value in the compare registers. Just like the other compare modes, this 16-bit value is compared to the PCA timer value. If a match is allowed to occur, an internal reset will be generated. This will not cause the RST pin to be driven low.

In order to hold off the reset, the user has three options:

1. periodically change the compare value so it will never match the PCA timer,
2. periodically change the PCA timer value so it will never match the compare values, or
3. disable the watchdog by clearing the WDTE bit before a match occurs and then re-enable it.

The first two options are more reliable because the watchdog timer is never disabled as in option #3. If the program counter ever goes astray, a match will eventually occur and cause an internal reset. The second option is also not recommended if other PCA modules are being used. Remember, the PCA timer is the time base for **all** modules; changing the time base for other modules would not be a good idea. Thus, in most applications the first solution is the best option.

Figure 19 shows the code for initializing the watchdog timer. Module 4 can be configured in either compare mode, and the WDTE bit in CMOD must also be set. The user's software then must periodically change (CCAP4H,CCAP4L) to keep a match from occurring with the PCA timer (CH,CL). This code is given in the WATCHDOG routine in Figure 19.

This routine should not be part of an interrupt service routine, because if the program counter goes astray and gets stuck in an infinite loop, interrupts will still be serviced and the watchdog will keep getting reset. Thus, the purpose of the watchdog would be defeated. Instead, call this subroutine from the main program within 2^{16} count of the PCA timer.

```
INIT_WATCHDOG:
   MOV CCAPM4, #4CH         ; Module 4 in compare mode
   MOV CCAP4L, #0FFH        ; Write to low byte first
   MOV CCAP4H, #0FFH        ; Before PCA timer counts up to
                            ; FFFF Hex, these compare values
                            ; must be changed
   OR CMOD, #40H            ; Set the WDTE bit to enable the
                            ; watchdog timer without changing
                            ; the other bits in CMOD
;
;*****************************************************************
;
; Main program goes here, but CALL WATCHDOG periodically.
;
;*****************************************************************
;
WATCHDOG:
   CLR EA                   ; Hold off interrupts
   MOV CCAP4L, #00          ; Next compare value is within
   MOV CCAP4H, CH           ; 255 counts of the current PCA
   SETB EA                  ; timer value
   RET
```

Figure 19. PCA Watchdog Timer Initialization Code

Watchdog Timer

This is a standard XA-G3 watchdog timer. This watchdog timer always comes up running at reset. The watchdog acts the same on EPROM, ROM, and ROMless parts, as in the XA-G3.

UARTs

Standard XA-S3 UART0 and UART1 with double buffered transmit register. A flag has been added to SnSTAT that is set if any of the status flags (BRn, FEn, or OEn) is set for the corresponding UART channel. This allows polling for UART errors quickly at the interrupt service routine. Baud rate sources may be timer 1 or timer 2.

The XA-S3 includes 2 UART ports that are compatible with the enhanced UART used on the XA-G3.

The UART has separate interrupt vectors for each UART's transmit and receive functions. The UART transmitter has been double buffered, allowing packed transmission of data with no gaps between bytes and less critical interrupt service routine timing. A break detect function has been added to the UART. This operates independently of the UART itself and provides a start-of-break status bit that the program may test. An Overrun Error flag allows detection of missed characters in the received data stream. The double buffered UART transmitter may require some software changes if code is used that was written for the original XA-G3 single buffered UART.

Each UART baud rate is determined by either a fixed division of the oscillator (in UART modes 0 and 2) or by the timer 1 or timer 2 overflow rate (in UART modes 1 and 3).

Timer 1 defaults to clock both UART0 and UART1. Timer 2 can be programmed to clock either UART0 through T2CON (via bits R0CLK and T0CLK) or UART1 through T2MOD (via bits R1CLK and T1CLK). In this case, the UART not clocked by T2 could use T1 as the clock source.

The serial port receive and transmit registers are both accessed at Special Function Register SnBUF. Writing to SnBUF loads the transmit register, and reading SnBUF accesses a physically separate receive register.

The serial port can operate in 4 modes:

Mode 0: Serial I/O expansion mode. Serial data enters and exits through RxDn. TxDn outputs the shift clock. 8 bits are transmitted/received (LSB first). (The baud rate is fixed at 1/16 the oscillator frequency.)

Mode 1: Standard 8-bit UART mode. 10 bits are transmitted (through TxDn) or received (through RxDn): a start bit (0), 8 data bits (LSB first), and a stop bit (1). On receive, the stop bit goes into RB8 in Special Function Register SnCON. The baud rate is variable.

Mode 2: Fixed rate 9-bit UART mode. 11 bits are transmitted (through TxD) or received (through RxD): start bit (0), 8 data bits (LSB first), a programmable 9th data bit, and a stop bit (1). On Transmit, the 9th data bit (TB8_n in SnCON) can be assigned the value of 0 or 1. Or, for example, the parity bit (P, in the PSW) could be moved into TB8_n. On receive, the 9th data bit goes into RB8_n in Special Function Register SnCON, while the stop bit is ignored. The baud rate is programmable to 1/32 of the oscillator frequency.

Mode 3: Standard 9-bit UART mode. 11 bits are transmitted (through TxDn) or received (through RxDn): a start bit (0), 8 data bits (LSB first), a programmable 9th data bit, and a stop bit (1). In fact, Mode 3 is the same as Mode 2 in all respects except baud rate. The baud rate in Mode 3 is variable.

In all four modes, transmission is initiated by any instruction that uses SnBUF as a destination register. Reception is initiated in Mode 0 by the condition RI_n = 0 and REN_n = 1. Reception is initiated in the other modes by the incoming start bit if REN_n = 1.

Serial Port Control Register
The serial port control and status register is the Special Function Register SnCON, shown in Figure 21. This register contains not only the mode selection bits, but also the 9th data bit for transmit and receive (TB8_n and RB8_n), and the serial port interrupt bits (TI_n and RI_n).

TI Flag
In order to allow easy use of the double buffered UART transmitter feature, the TI_n flag is set by the UART hardware under two conditions. The first condition is the completion of any byte transmission. This occurs at the end of the stop bit in modes 1, 2, or 3, or at the end of the eighth data bit in mode 0. The second condition is when SnBUF is written while the UART transmitter is idle. In this case, the TI_n flag is set in order to indicate that the second UART transmitter buffer is still available.

Typically, UART transmitters generate one interrupt per byte transmitted. In the case of the XA UART, one additional interrupt is generated as defined by the stated conditions for setting the TI_n flag. This additional interrupt does not occur if double buffering is bypassed as explained below. Note that if a character oriented approach is used to transmit data through the UART, there could be a second interrupt for each character transmitted, depending on the timing of the writes to SBUF. For this reason, it is generally better to bypass double buffering when the UART transmitter is used in character oriented mode. This is also true if the UART is polled rather than interrupt driven, and when transmission is character oriented rather than message or string oriented. The interrupt occurs at the end of the last byte transmitted when the UART becomes idle. Among other things, this allows a program to determine when a message has been transmitted completely. The interrupt service routine should handle this additional interrupt.

The recommended method of using the double buffering in the application program is to have the interrupt service routine handle a single byte for each interrupt occurrence. In this manner the program essentially does not require any special considerations for double buffering. Unless higher priority interrupts cause delays in the servicing of the UART transmitter interrupt, the double buffering will result in transmitted bytes being tightly packed with no intervening gaps.

9-bit Mode
Please note that the ninth data bit (TB8) is not double buffered. Care must be taken to insure that the TB8 bit contains the intended data at the point where it is transmitted. Double buffering of the UART transmitter may be bypassed as a simple means of synchronizing TB8 to the rest of the data stream.

Bypassing Double Buffering
The UART transmitter may be used as if it is single buffered. The recommended UART transmitter interrupt service routine (ISR) technique to bypass double buffering first clears the TI_n flag upon entry into the ISR, as in standard practice. This clears the interrupt that activated the ISR. Secondly, the TI_n flag is cleared immediately following each write to SnBUF. This clears the interrupt flag that would otherwise direct the program to write to the second transmitter buffer. If there is any possibility that a higher priority interrupt might become active between the write to SnBUF and the clearing of the TI_n flag, the interrupt system may have to be temporarily disabled during that sequence by clearing, then setting the EA bit in the IEL register.

CLOCKING SCHEME/BAUD RATE GENERATION

The XA UARTS clock rates are determined by either a fixed division (modes 0 and 2) of the oscillator clock or by the Timer 1 or Timer 2 overflow rate (modes 1 and 3).

The clock for the UARTs in XA runs at 16x the Baud rate. If the timers are used as the source for Baud Clock, since maximum speed of timers/Baud Clock is Osc/4, the maximum baud rate is timer overflow divided by 16 i.e. Osc/64.

In Mode 0, it is fixed at Osc/16. In Mode 2, however, the fixed rate is Osc/32.

Pre-scaler for all Timers T0,1,2 controlled by PT1, PT0 bits in SCR	00	Osc/4
	01	Osc/16
	10	Osc/64
	11	reserved

Baud Rate for UART Mode 0:
Baud_Rate = Osc/16

Baud Rate calculation for UART Mode 1 and 3:
Baud_Rate = Timer_Rate/16

Timer_Rate = Osc/(N*(Timer_Range– Timer_Reload_Value))

where N = the TCLK prescaler value: 4, 16, or 64.
and Timer_Range = 256 for timer 1 in mode 2.
65536 for timer 1 in mode 0 and timer 2 in count up mode.

The timer reload value may be calculated as follows:
Timer_Reload_Value = Timer_Range–(Osc/(Baud_Rate*N*16))

NOTES:
1.. The maximum baud rate for a UART in mode 1 or 3 is Osc/64.
2.. The lowest possible baud rate (for a given oscillator frequency and N value) may be found by using a timer reload value of 0.
3.. The timer reload value may never be larger than the timer range.
4.. If a timer reload value calculation gives a negative or fractional result, the baud rate requested is not possible at the given oscillator frequency and N value.

Baud Rate for UART Mode 2:
Baud_Rate = Osc/32

Using Timer 2 to Generate Baud Rates

Timer T2 is a 16-bit up/down counter in XA. As a baud rate generator, timer 2 is selected as a clock source for either/both UART0 and UART1 transmitters and/or receivers by setting TCLKn and/or RCLKn in T2CON and T2MOD. As the baud rate generator, T2 is incremented as Osc/N where N = 4, 16 or 64 depending on TCLK as programmed in the SCR bits PT1, and PTO. So, if T2 is the source of one UART, the other UART could be clocked by either T1 overflow or fixed clock, and the UARTs could run independently with different baud rates.

T2CON 0x418		bit5	bit4	
		RCLK0	TCLK0	

T2MOD 0x419		bit5	bit4	
		RCLK1	TCLK1	

Prescaler Select for Timer Clock (TCLK)

SCR 0x440		bit3	bit2	
		PT1	PT0	

SnSTAT Address: S0STAT 421
S1STAT 425
Bit Addressable
Reset Value: 00H

MSB							LSB
—	—	—	—	FEn	BRn	OEn	STINTn

BIT	SYMBOL	FUNCTION
SnSTAT.3	FEn	Framing Error flag is set when the receiver fails to see a valid STOP bit at the end of the frame. Cleared by software.
SnSTAT.2	BRn	Break Detect flag is set if a character is received with all bits (including STOP bit) being logic ‘0’. Thus it gives a “Start of Break Detect” on bit 8 for Mode 1 and bit 9 for Modes 2 and 3. The break detect feature operates independently of the UARTs and provides the START of Break Detect status bit that a user program may poll. Cleared by software.
SnSTAT.1	OEn	Overrun Error flag is set if a new character is received in the receiver buffer while it is still full (before the software has read the previous character from the buffer), i.e., when bit 8 of a new byte is received while RI in SnCON is still set. Cleared by software.
SnSTAT.0	STINTn	This flag must be set to enable any of the above status flags to generate a receive interrupt (RIn). The only way it can be cleared is by a software write to this register.

SU00607B

Figure 20. Serial Port Extended Status (SnSTAT) Register (See also Figure 22 regarding Framing Error flag)

UART INTERRUPT SCHEME

There are separate interrupt vectors for each UART’s transmit and receive functions.

Table 5. Interrupt Vector Locations for UARTs

Vector Address	Interrupt Source	Arbitration
A0H – A3H	UART 0 Receiver	9
A4H – A7H	UART 0 Transmitter	10
A8H – ABH	UART 1 Receiver	11
ACH – AFH	UART 1 Transmitter	12

NOTE:
The transmit and receive vectors could contain the same ISR address to work like a 8051 interrupt scheme

Error Handling, Status Flags and Break Detect
XA UARTs have several error flags as described in Figures 20 and 22.

Multiprocessor Communications

Modes 2 and 3 have a special provision for multiprocessor communications. In these modes, 9 data bits are received. The 9th one goes into RB8. Then comes a stop bit. The port can be programmed such that when the stop bit is received, the serial port interrupt will be activated only if RB8 = 1. This feature is enabled by setting bit SM2 in SCON. A way to use this feature in multiprocessor systems is as follows:

When the master processor wants to transmit a block of data to one of several slaves, it first sends out an address byte which identifies the target slave. An address byte differs from a data byte in that the 9th bit is 1 in an address byte and 0 in a data byte. With SM2 = 1, no slave will be interrupted by a data byte. An address byte, however, will interrupt all slaves, so that each slave can examine the received byte and see if it is being addressed. The addressed slave will clear its SM2 bit and prepare to receive the data bytes that will be coming. The slaves that weren’t being addressed leave their SM2s set and go on about their business, ignoring the coming data bytes.

SM2 has no effect in Mode 0, and in Mode 1 can be used to check the validity of the stop bit although this is better done with the Framing Error (FE) flag. In a Mode 1 reception, if SM2 = 1, the receive interrupt will not be activated unless a valid stop bit is received.

Automatic Address Recognition
Automatic Address Recognition is a feature which allows the UART to recognize certain addresses in the serial bit stream by using hardware to make the comparisons. This feature saves a great deal of software overhead by eliminating the need for the software to examine every serial address which passes by the serial port. This feature is enabled by setting the SM2 bit in SCON. In the 9 bit UART modes, mode 2 and mode 3, the Receive Interrupt flag (RI) will be automatically set when the received byte contains either the “Given” address or the “Broadcast” address. The 9 bit mode requires that the 9th information bit is a 1 to indicate that the received information is an address and not data. Automatic address recognition is shown in Figure 23.

Using the Automatic Address Recognition feature allows a master to selectively communicate with one or more slaves by invoking the Given slave address or addresses. All of the slaves may be contacted by using the Broadcast address. Two special Function Registers are used to define the slave’s address, SADDR, and the address mask, SADEN. SADEN is used to define which bits in the SADDR are to be used and which bits are “don’t care”. The SADEN mask can be logically ANDed with the SADDR to create the “Given” address which the master will use for addressing each of the slaves. Use of the Given address allows multiple slaves to be recognized while excluding others. The following examples will help to show the versatility of this scheme:

Slave 0	SADDR	=	1100 0000
	SADEN	=	1111 1101
	Given	=	1100 00X0
Slave 1	SADDR	=	1100 0000
	SADEN	=	1111 1110
	Given	=	1100 000X

In the above example SADDR is the same and the SADEN data is used to differentiate between the two slaves. Slave 0 requires a 0 in bit 0 and it ignores bit 1. Slave 1 requires a 0 in bit 1 and bit 0 is ignored. A unique address for Slave 0 would be 1100 0010 since slave 1 requires a 0 in bit 1. A unique address for slave 1 would be

1100 0001 since a 1 in bit 0 will exclude slave 0. Both slaves can be selected at the same time by an address which has bit 0 = 0 (for slave 0) and bit 1 = 0 (for slave 1). Thus, both could be addressed with 1100 0000.

In a more complex system the following could be used to select slaves 1 and 2 while excluding slave 0:

Slave 0	SADDR	=	1100 0000
	SADEN	=	1111 1001
	Given	=	1100 0XX0
Slave 1	SADDR	=	1110 0000
	SADEN	=	1111 1010
	Given	=	1110 0X0X
Slave 2	SADDR	=	1110 0000
	SADEN	=	1111 1100
	Given	=	1110 00XX

In the above example the differentiation among the 3 slaves is in the lower 3 address bits. Slave 0 requires that bit 0 = 0 and it can be uniquely addressed by 1110 0110. Slave 1 requires that bit 1 = 0 and it can be uniquely addressed by 1110 and 0101. Slave 2 requires that bit 2 = 0 and its unique address is 1110 0011. To select Slaves 0 and 1 and exclude Slave 2 use address 1110 0100, since it is necessary to make bit 2 = 1 to exclude slave 2.

The Broadcast Address for each slave is created by taking the logical OR of SADDR and SADEN. Zeros in this result are teated as don't-cares. In most cases, interpreting the don't-cares as ones, the broadcast address will be FF hexadecimal.

Upon reset SADDR and SADEN are loaded with 0s. This produces a given address of all "don't cares" as well as a Broadcast address of all "don't cares". This effectively disables the Automatic Addressing mode and allows the microcontroller to use standard UART drivers which do not make use of this feature.

SnCON Address: S0CON 420
S1CON 424

Bit Addressable
Reset Value: 00H

MSB							LSB
SM0	SM1	SM2	REN	TB8	RB8	TI	RI

Where SM0, SM1 specify the serial port mode, as follows:

SM0	SM1	Mode	Description	Baud Rate
0	0	0	shift register	$f_{OSC}/16$
0	1	1	8-bit UART	variable
1	0	2	9-bit UART	$f_{OSC}/32$
1	1	3	9-bit UART	variable

BIT	SYMBOL	FUNCTION
SnCON.5	SM2	Enables the multiprocessor communication feature in Modes 2 and 3. In Mode 2 or 3, if SM2 is set to 1, then RI will not be activated if the received 9th data bit (RB8) is 0. In Mode 1, if SM2=1 then RI will not be activated if a valid stop bit was not received. In Mode 0, SM2 should be 0.
SnCON.4	REN	Enables serial reception. Set by software to enable reception. Clear by software to disable reception.
SnCON.3	TB8	The 9th data bit that will be transmitted in Modes 2 and 3. Set or clear by software as desired. The TB8 bit is not double buffered. See text for details.
SnCON.2	RB8	In Modes 2 and 3, is the 9th data bit that was received. In Mode 1, if SM2=0, RB8 is the stop bit that was received. In Mode 0, RB8 is not used.
SnCON.1	TI	Transmit interrupt flag. Set when another byte may be written to the UART transmitter. See text for details. Must be cleared by software.
SnCON.0	RI	Receive interrupt flag. Set by hardware at the end of the 8th bit time in Mode 0, or at the end of the stop bit time in the other modes (except see SM2). Must be cleared by software.

SU00597C

Figure 21. Serial Port Control (SnCON) Register

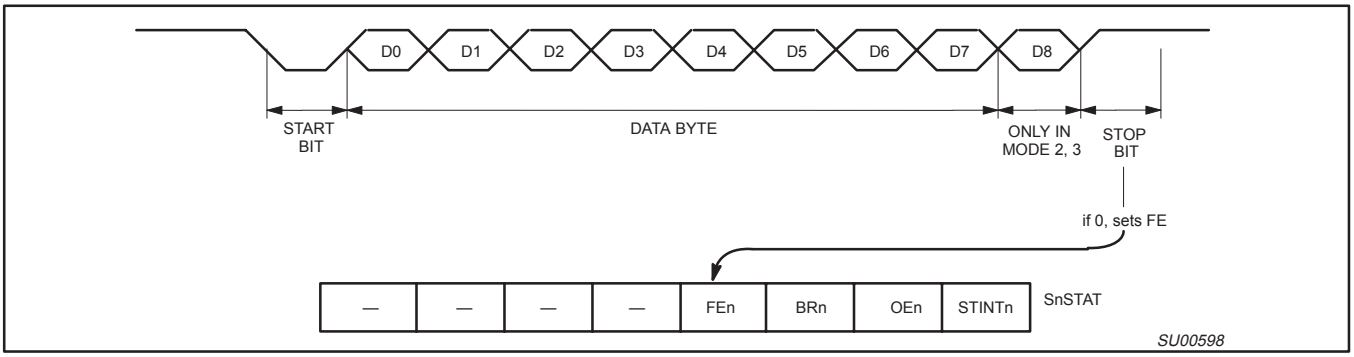

Figure 22. UART Framing Error Detection

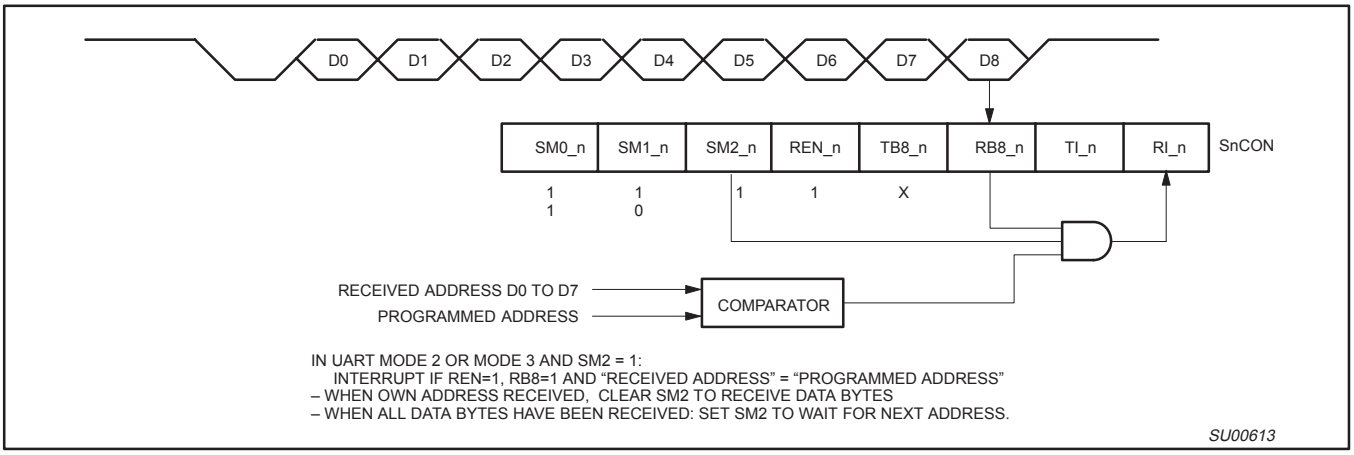

Figure 23. UART Multiprocessor Communication, Automatic Address Recognition

Clocking / Baud Rate Generation

Same as for the XA-G3.

I/O Port Output Configuration

Port output configurations are the same as for the XA-G3: open drain, quasi-bidirectional, push-pull, and off.

External Bus

The external bus operates in the same manner as the XA-G3, but all 24 address lines are brought out to the outside world. This allows for a maximum of 16 Mbytes of code memory and 16 Mbytes of data memory.

Clock Output

The CLKOUT pin allows easier external bus interfacing in some situations. This output reflects the X1 clock input to the XA, but is delayed to match the external bus outputs and strobes. The default is for CLKOUT to be on at reset, but it may be turned off via the CLKD bit that has been added to the BCR register.

Reset

Active low reset input, the same as the XA-G3.

The associated $\overline{\text{RSTOUT}}$ pin provides an external indication via an active low open drain output when an internal reset occurs. The $\overline{\text{RSTOUT}}$ pin will be driven low when the $\overline{\text{RST}}$ pin is driven low, when a Watchdog reset occurs or the RESET instruction is executed. This signal may be used to inform other devices in a system that the XA-S3 has been reset.

The latched values of $\overline{\text{EA}}$ and BUSW are NOT automatically updated when an internal reset occurs. $\overline{\text{RSTOUT}}$ may be used to apply an external reset to the XA-S3 in order to update the previously latched $\overline{\text{EA}}$ and BUSW values. However, since $\overline{\text{RSTOUT}}$ reflects ALL reset sources, it cannot simply be fed back into the $\overline{\text{RST}}$ pin without other logic.

The reset source identification register (RSTSRC) indicates the cause of the most recent XA reset. The cause may have been an externally applied reset signal, execution of the RESET instruction, or a Watchdog reset. Figure 24 shows the fields in the RSTSRC register.

Power Reduction Modes

The XA-S3 supports Idle and Power Down modes of power reduction. The idle mode leaves some peripherals running in order to allow them to activate the processor when an interrupt is generated. The power down mode stops the oscillator in order to absolutely minimize power. The processor can be made to exit power down mode via a reset or one of the external interrupt inputs (INT0 or INT1). This will occur if the interrupt is enabled and its priority is higher than that defined by IM3 through IM0. In power down mode, the power supply voltage may be reduced to the RAM keep-alive voltage V_{RAM}. This retains the RAM, register, and SFR contents at the point where power down mode was entered. V_{DD} must be raised to within the operating range before power down mode is exited.

RSTSRC Address:463h
Not bit Addressable
Reset Value: see below

MSB							LSB
—	—	—	—	—	R_WD	R_CMD	R_EXT

BIT	SYMBOL	FUNCTION
RSTSRC.7	—	Reserved for future use. Should not be set to 1 by user programs.
RSTSRC.6	—	Reserved for future use. Should not be set to 1 by user programs.
RSTSRC.5	—	Reserved for future use. Should not be set to 1 by user programs.
RSTSRC.4	—	Reserved for future use. Should not be set to 1 by user programs.
RSTSRC.3	—	Reserved for future use. Should not be set to 1 by user programs.
RSTSRC.2	R_WD	Indicates that the last reset was caused by a watchdog timer overflow.
RSTSRC.1	R_CMD	Indicates that the last reset was caused by execution of the RESET instruction.
RSTSRC.0	R_EXT	Indicates that the last reset was caused by the external $\overline{RST}$ input.

SU00942

Figure 24. Reset source register (RSTSRC)

INTERRUPTS

XA-S3 interrupt sources include the following:

- External interrupts 0 and 1 (2)
- Timer 0, 1, and 2 interrupts (3)
- PCA: 1 global and 5 channel interrupts (6)
- A/D interrupt (1)
- UART 0 transmitter and receiver interrupts (2)
- UART 1 transmitter and receiver interrupts (2)
- I²C interrupt (1)
- Software interrupts (7)

There are a total of 17 **hardware** interrupt sources, enable bits, priority bit sets, etc.

The XA-S3 supports a total of 17 maskable event interrupt sources (for the various XA peripherals), seven software interrupts, 5 exception interrupts (plus reset), and 16 traps. The maskable event interrupts share a global interrupt disable bit (the EA bit in the IEL register) and each also has a separate individual interrupt enable bit (in the IEL or IEH registers). Only three bits of the IPA register values are used on the XA-S3. Each event interrupt can be set to occur at one of 8 priority levels via bits in the Interrupt Priority (IP) registers, IPA0 through IPA5. The value 0 in the IPA field gives the interrupt priority 0, in effect disabling the interrupt. A value of 1 gives the interrupt a priority of 9, the value 2 gives priority 10, etc. The result is the same as if all four bits were used and the top bit set for all values except 0. Details of the priority scheme may be found in the *XA User Guide*.

The complete interrupt vector list for the XA-S3, including all 4 interrupt types, is shown in the following tables. The tables include the address of the vector for each interrupt, the related priority register bits (if any), and the arbitration ranking for that interrupt source. The arbitration ranking determines the order in which interrupts are processed if more than one interrupt of the same priority occurs simultaneously.

EXCEPTION/TRAPS PRECEDENCE

DESCRIPTION	VECTOR ADDRESS	ARBITRATION RANKING
Reset (h/w, watchdog, s/w)	0000–0003	0 (High)
Breakpoint	0004–0007	1
Trace	0008–000B	1
Stack Overflow	000C–000F	1
Divide by 0	0010–0013	1
User RETI	0014–0017	1
TRAP 0–15 (software)	0040–007F	1

EVENT INTERRUPTS

DESCRIPTION	FLAG BIT	VECTOR ADDRESS	ENABLE BIT	INTERRUPT PRIORITY	ARBITRATION RANKING
External Interrupt 0	IE0	0080–0083	EX0	IPA0.2–0 (PX0)	2
Timer 0 Interrupt	TF0	0084–0087	ET0	IPA0.6–4 (PT0)	3
External Interrupt 1	IE1	0088–008B	EX1	IPA1.2–0 (PX1)	4
Timer 1 Interrupt	TF1	008C–008F	ET1	IPA1.6–4 (PT1)	5
Timer 2 Interrupt	TF2 (EXF2)	0090–0093	ET2	IPA2.2–0 (PT2)	6
PCA Interrupt	CCF0–CCF4, CF	0094–0097	EPC	IPA2.6–4 (PPC)	7
A/D Interrupt	ADINT	0098–009B	EAD	IPA3.2–0 (PAD)	8
Serial Port 0 Rx	RI_0	00A0–00A3	ERI0	IPA4.2–0 (PRI0)	9
Serial Port 0 Tx	TI_0	00A4–00A7	ETI0	IPA4.6–4 (PTI0)	10
Serial Port 1 Rx	RI_1	00A8–00AB	ERI1	IPA5.2–0 (PRI1)	11
Serial Port 1 Tx	TI_1	00AC–00AF	ETI1	IPA5.6–4 (PTI1)	12
PCA channel 0	CCF0	00C0–00C3	EC0	IPB0.2–0 (PC0)	17
PCA channel 1	CCF1	00C4–00C7	EC1	IPB0.6–4 (PC1)	18
PCA channel 2	CCF2	00C8–00CB	EC2	IPB1.2–0 (PC2)	19
PCA channel 3	CCF3	00CC–00CF	EC3	IPB1.6–4 (PC3)	20
PCA channel 4	CCF4	00D0–00D3	EC4	IPB2.2–0 (PC4)	21
I^2C Interrupt	SI	00D4–00D7	EI2	IPB2.6–4 (PI2)	22

SOFTWARE INTERRUPTS

DESCRIPTION	FLAG BIT	VECTOR ADDRESS	ENABLE BIT	INTERRUPT PRIORITY
Software Interrupt 1	SWR1	0100–0103	SWE1	(fixed at 1)
Software Interrupt 2	SWR2	0104–0107	SWE2	(fixed at 2)
Software Interrupt 3	SWR3	0108–010B	SWE3	(fixed at 3)
Software Interrupt 4	SWR4	010C–010F	SWE4	(fixed at 4)
Software Interrupt 5	SWR5	0110–0113	SWE5	(fixed at 5)
Software Interrupt 6	SWR6	0114–0117	SWE6	(fixed at 6)
Software Interrupt 7	SWR7	0118–011B	SWE7	(fixed at 7)

ABSOLUTE MAXIMUM RATINGS

PARAMETER	RATING	UNIT
Operating temperature under bias	–55 to +125	°C
Storage temperature range	–65 to +150	°C
Voltage on $\overline{EA}/V_{PP}$ pin to V_{SS}	0 to +13.0	V
Voltage on any other pin to V_{SS}	–0.5 to V_{DD}+0.5 V	V
Maximum I_{OL} per I/O pin	15	mA
Power dissipation (based on package heat transfer, not device power consumption)	1.5	W

DC ELECTRICAL CHARACTERISTICS

V_{DD} = 2.7 V to 5.5 V, unless otherwise specified.
T_{amb} = 0 to +70°C for commercial, T_{amb} = –40°C to +85°C for industrial, unless otherwise specified.

SYMBOL	PARAMETER	TEST CONDITIONS	LIMITS			UNIT
			MIN	TYP	MAX	
I_{DD}	Power supply current, operating	5.0 V, 30 MHz			80	mA
I_{ID}	Power supply current, Idle mode	5.0 V, 30 MHz			35	mA
I_{PD}	Power supply current, Power Down mode	5.0 V, 3.0 V		5	100	µA
		5.0 V, 3.0 V, –40 to +85°C			150	µA
V_{RAM}	RAM keep-alive voltage		1.5			V
V_{IL}	Input low voltage		–0.5		0.22 V_{DD}	V
V_{IH}	Input high voltage, except XTAL1, $\overline{RST}$	V_{DD} = 5.0 V	2.2			V
		V_{DD} = 3.0 V	2.0			V
V_{IH1}	Input high voltage to XTAL1, $\overline{RST}$	For both 3.0 V and 5.0 V	0.7 V_{DD}			V
V_{OL}	Output low voltage, all ports, ALE, $\overline{PSEN}$[4], CLKOUT	I_{OL} = 3.2 mA, V_{DD} = 5.0 V			0.5	V
		I_{OL} = 1.0 mA, V_{DD} = 3.0 V			0.4	V
V_{OH1}	Output high voltage, all ports, ALE, $\overline{PSEN}$[2], CLKOUT	I_{OH} = –100 µA, V_{DD} = 4.5 V	2.4			V
		I_{OH} = –30 µA, V_{DD} = 2.7 V	2.0			V
V_{OH2}	Output high voltage, all ports ALE, $\overline{PSEN}$[3], CLKOUT	I_{OH} = –3.2 mA, V_{DD} = 4.5 V	2.4			V
		I_{OH} = –1.0 mA, V_{DD} = 2.7 V	2.2			V
C_{IO}	Input/Output pin capacitance[1]				15	pF
I_{IL}	Logical 0 input current, all ports[7]	V_{IN} = 0.45 V			–50	µA
I_{LI}	Input leakage current, all ports[6]	V_{IN} = V_{IL} or V_{IH}			±10	µA
I_{TL}	Logical 1 to 0 transition current, all ports[5]	At V_{DD} = 5.5 V			–650	µA
		At V_{DD} = 2.7 V			–250	µA

NOTES:
1. Maximum 15pF for $\overline{EA}/V_{PP}$.
2. Ports in quasi-bidirectional mode with weak pullup (applies to ALE, $\overline{PSEN}$ only during $\overline{RESET}$).
3. Ports in PUSH-PULL mode, both pullup and pulldown assumed to be the same strength.
4. In all output modes.
5. Port pins source a transition current when used in quasi-bidirectional mode and externally driven from 1 to 0. This current is highest when V_{IN} is approximately 2 V.
6. Measured with port in high impedance mode.
7. Measured with port in quasi-bidirectional mode.
8. Under steady state (non-transient) conditions, I_{OL} must be externally limited as follows:
   Maximum I_{OL} per port pin: 15 mA
   Maximum I_{OL} per 8-bit port: 26 mA
   Maximum total I_{OL} for all outputs: 71 mA
   If I_{OL} exceeds the test condition, V_{OL} may exceed the related specification. Pins are not guaranteed to sink current greater than the listed test conditions.

8-BIT MODE A/D CONVERTER DC ELECTRICAL CHARACTERISTICS

T_{amb} = 0 to +70°C for commercial, T_{amb} = –40 to +85°C for industrial, unless otherwise specified.

SYMBOL	PARAMETER	TEST CONDITIONS	LIMITS		UNIT
			MIN	MAX	
AV_{DD}	Analog supply voltage		2.7	3.3	V
AI_{DD}	Analog supply current (operating)	Port 5 = 0 to AV_{DD}		2.5	mA
AI_{ID}	Analog supply current (Idle mode)			2.5	μA
AI_{PD}	Analog supply current (Power-Down mode)	Commercial temperature range		100	μA
		Industrial temperature range		150	μA
AV_{IN}	Analog input voltage		AV_{SS} –0.2	AV_{DD} +0.2	V
R_{REF}	Resistance between V_{REF+} and V_{REF-}		125	225	kΩ
C_{IA}	Analog input capacitance			15	pF
DL_e	Differential non-linearity[1, 2, 3]			±1	LSB
IL_e	Integral non-linearity[1, 4]			±1	LSB
OS_e	Offset error[1, 5]			±2.5	LSB
G_e	Gain error[1, 6]			±1	%
A_e	Absolute voltage error[1, 7]			±3	LSB
M_{CTC}	Channel-to-channel matching			±1	LSB
C_t	Crosstalk between inputs of port[8]	0 – 100 kHz		–60	dB

NOTES:

1. Conditions: AV_{REF-} = 0 V; AV_{REF+} = 3.07 V.
2. The differential non-linearity (DL_e) is the difference between the actual step width and the ideal step width. See Figure 25.
3. The ADC is monotonic, there are no missing codes.
4. The integral non-linearity (IL_e) is the peak difference between the center of the steps of the actual and the ideal transfer curve after appropriate adjustment of gain and offset errors. See Figure 25.
5. The offset error (OS_e) is the absolute difference between the straight line which fits the actual transfer curve (after removing gain error), and the straight line which fits the ideal transfer curve. See Figure 25.
6. The gain error (G_e) is the relative difference in percent between the straight line fitting the actual transfer curve (after removing offset error), and the straight line which fits the ideal transfer curve. Gain error is constant at every point on the transfer curve. See Figure 25.
7. The absolute voltage error (A_e) is the maximum difference between the center of the steps of the actual transfer curve of the non-calibrated ADC and the ideal transfer curve.
8. This should be considered when both analog and digital signals are input simultaneously to Port 5. Parameter is guaranteed bydesign.

10-BIT[10] MODE A/D CONVERTER DC ELECTRICAL CHARACTERISTICS

T_{amb} = 0 to +70°C for commercial, T_{amb} = –40 to +85°C for industrial, unless otherwise specified.

SYMBOL	PARAMETER	TEST CONDITIONS	LIMITS		UNIT
			MIN	MAX	
AV_{DD}	Analog supply voltage		2.7	3.3	V
AI_{DD}	Analog supply current (operating)	Port 5 = 0 to AV_{DD}		2.5	mA
AI_{ID}	Analog supply current (Idle mode)			2.5	μA
AI_{PD}	Analog supply current (Power-Down mode)	Commercial temperature range		100	μA
		Industrial temperature range		150	μA
AV_{IN}	Analog input voltage		AV_{SS} –0.2	AV_{DD} +0.2	V
R_{REF}	Resistance between V_{REF+} and V_{REF-}		125	225	kΩ
C_{IA}	Analog input capacitance			15	pF
DL_e	Differential non-linearity[1, 2, 3]			±1 [9]	LSB
IL_e	Integral non-linearity[1, 4]			±2.5 [9]	LSB
OS_e	Offset error[1, 5]			±6 [9]	LSB
G_e	Gain error[1, 6]			±1 [9]	%
A_e	Absolute voltage error (with averaging)[1, 7]			±8 [9]	LSB
M_{CTC}	Channel-to-channel matching			±1	LSB
C_t	Crosstalk between inputs of port[8]	0 – 100 kHz		–60	dB

NOTES:

1. Conditions: AV_{REF-} = 0 V; AV_{REF+} = 3.07 V.
2. The differential non-linearity (DL_e) is the difference between the actual step width and the ideal step width. See Figure 25.
3. The ADC is monotonic, there are no missing codes.
4. The integral non-linearity (IL_e) is the peak difference between the center of the steps of the actual and the ideal transfer curve after appropriate adjustment of gain and offset errors. See Figure 25.
5. The offset error (OS_e) is the absolute difference between the straight line which fits the actual transfer curve (after removing gain error), and the straight line which fits the ideal transfer curve. See Figure 25.
6. The gain error (G_e) is the relative difference in percent between the straight line fitting the actual transfer curve (after removing offset error), and the straight line which fits the ideal transfer curve. Gain error is constant at every point on the transfer curve. See Figure 25.
7. The absolute voltage error (A_e) is the maximum difference between the center of the steps of the actual transfer curve of the non-calibrated ADC and the ideal transfer curve.
8. This should be considered when both analog and digital signals are input simultaneously to Port 5. Parameter is guaranteed bydesign.
9. 10-bit mode only.
10. 10-bit mode is only operational up to f_C = 20 MHz.

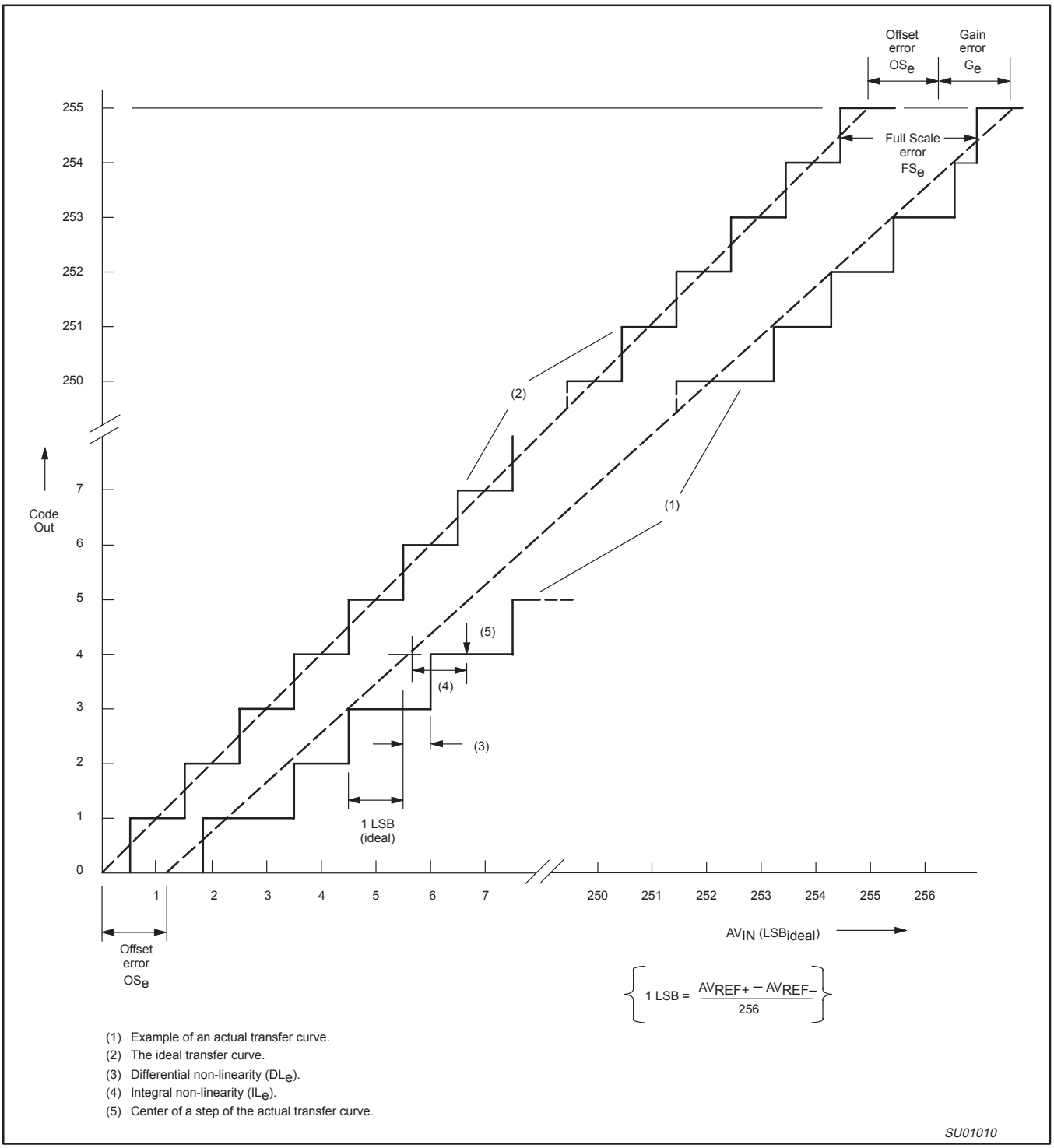

(1) Example of an actual transfer curve.
(2) The ideal transfer curve.
(3) Differential non-linearity (DL_e).
(4) Integral non-linearity (IL_e).
(5) Center of a step of the actual transfer curve.

Figure 25. ADC Conversion Characteristic

AC ELECTRICAL CHARACTERISTICS (5 V)

V_{DD} = 4.5 V to 5.5 V; T_{amb} = 0 to +70°C for commercial, T_{amb} = –40°C to +85°C for industrial.

SYMBOL	FIGURE	PARAMETER	LIMITS		UNIT
			MIN	MAX	
External Clock					
f_C	32	Oscillator frequency	0	30	MHz
t_C	32	Clock period and CPU timing cycle	$1/f_C$		ns
t_{CHCX}	32	Clock high-time (Note 7)	t_C * 0.5		ns
t_{CLCX}	32	Clock low time (Note 7)	t_C * 0.4		ns
t_{CLCH}	32	Clock rise time (Note 7)		5	ns
t_{CHCL}	32	Clock fall time (Note 7)		5	ns
Address Cycle					
t_{LHLL}	26, 28, 30	ALE pulse width (programmable)	(V1 * t_C) – 6		ns
t_{AVLL}	26, 28, 30	Address valid to ALE de-asserted (set-up)	(V1 * t_C) – 12		ns
t_{LLAX}	26, 28, 30	Address hold after ALE de-asserted	(t_C/2) – 10		ns
Code Read Cycle					
t_{PLPH}	26	$\overline{PSEN}$ pulse width	(V2 * t_C) – 10		ns
t_{LLPL}	26	ALE de-asserted to $\overline{PSEN}$ asserted	(t_C/2) – 7		ns
t_{AVIVA}	26	Address valid to instruction valid, ALE cycle (access time)		(V3 * t_C) – 36	ns
t_{AVIVB}	27	Address valid to instruction valid, non-ALE cycle (access time)		(V4 * t_C) – 29	ns
t_{PLIV}	26	$\overline{PSEN}$ asserted to instruction valid (enable time)		(V2 * t_C) – 29	ns
t_{PHIX}	26	Instruction hold after $\overline{PSEN}$ de-asserted	0		ns
t_{PHIZ}	26	Bus 3-State after $\overline{PSEN}$ de-asserted		t_C – 8	ns
t_{IXUA}	26	Hold time of unlatched part of address after instruction latched	0		ns
Data Read Cycle					
t_{RLRH}	28	$\overline{RD}$ pulse width	(V7 * t_C) – 10		ns
t_{LLRL}	28	ALE de-asserted to $\overline{RD}$ asserted	(t_C/2) – 7		ns
t_{AVDVA}	28	Address valid to data input valid, ALE cycle (access time)		(V6 * t_C) – 36	ns
t_{AVDVB}	29	Address valid to data input valid, non-ALE cycle (access time)		(V5 * t_C) – 29	ns
t_{RLDV}	28	$\overline{RD}$ low to valid data in (enable time)		(V7 * t_C) – 29	ns
t_{RHDX}	28	Data hold time after $\overline{RD}$ de–asserted	0		ns
t_{RHDZ}	28	Bus 3-State after $\overline{RD}$ de-asserted (disable time)		t_C – 8	ns
t_{DXUA}	28	Hold time of unlatched part of address after data latched	0		ns
Data Write Cycle					
t_{WLWH}	30	$\overline{WR}$ pulse width	(V8 * t_C) – 10		ns
t_{LLWL}	30	ALE falling edge to $\overline{WR}$ asserted	(V12 * t_C) – 10		ns
t_{QVWX}	30	Data valid before $\overline{WR}$ asserted (data set-up time)	(V13 * t_C) – 22		ns
t_{WHQX}	30	Data hold time after $\overline{WR}$ de-asserted (Note 6)	(V11 * t_C) – 5		ns
t_{AVWL}	30	Address valid to $\overline{WR}$ asserted (address set-up time) (Note 5)	(V9 * t_C) – 22		ns
t_{UAWH}	30	Hold time of unlatched part of address after $\overline{WR}$ is de-asserted	(V11 * t_C) – 7		ns
Wait Input					
t_{WTH}	31	WAIT stable after bus strobe ($\overline{RD}$, $\overline{WR}$, or $\overline{PSEN}$) asserted		(V10 * t_C) – 30	ns
t_{WTL}	31	WAIT hold after bus strobe ($\overline{RD}$, $\overline{WR}$, or $\overline{PSEN}$) asserted	(V10 * t_C) – 5		ns

NOTES ON PAGE 41.

AC ELECTRICAL CHARACTERISTICS (5 V RANGE) (continued)

This set of parameters is referenced to the XA-S3 clock output.

SYMBOL	FIGURE	PARAMETER	LIMITS		UNIT
			MIN	MAX	
Address Cycle					
t_{CHLH}	26	CLKOUT rising edge to ALE rising edge	–	13	ns
t_{CLLL}	26	CLKOUT falling edge to ALE falling edge	–	9	ns
t_{CHAV}	26	CLKOUT rising edge to address valid	–	18	ns
t_{CHAX}	26	CLKOUT rising edge to address changing (hold time)	2	–	ns
Code Read Cycle					
t_{CHPL}	26	CLKOUT rising edge to $\overline{PSEN}$ asserted	–	14	ns
t_{CHPH}	26	CLKOUT rising edge to $\overline{PSEN}$ de-asserted	–	12	ns
t_{IVCH}	26	Instruction valid to CLKOUT rising edge (setup time)	20	–	ns
t_{CHIX}	26	CLKOUT rising edge to instruction changing (hold time)	0	–	ns
t_{CHIZ}	26	CLKOUT rising edge to Bus 3-State (code read)	–	t_C–8	ns
Data Read Cycle					
t_{CHRL}	28	CLKOUT rising edge to $\overline{RD}$ asserted	–	12	ns
t_{CHRH}	28	CLKOUT rising edge to $\overline{RD}$ de-asserted	–	10	ns
t_{DVCH}	28	Data valid to CLKOUT rising edge (setup time)	20	–	ns
t_{CHDX}	28	CLKOUT rising edge to Data changing (hold time)	0	–	ns
t_{CHDZ}	28	CLKOUT rising edge to Bus 3-State (data read)	–	t_C–8	ns
Data Write Cycle					
t_{CHWL}	30	CLKOUT falling edge to $\overline{WR}$ asserted	–	12	ns
t_{CHWH}	30	CLKOUT rising edge to $\overline{WR}$ de-asserted	–	10	ns
t_{QVCH}	30	Data valid to CLKOUT rising edge (setup time)	4	–	ns
t_{CHQX}	30	CLKOUT rising edge to Data changing (hold time)	0	–	ns
Wait Input					
t_{CHWTH}	31	WAIT valid prior to CLKOUT rising edge[8]	21	4	ns

NOTES ON PAGE 41.

AC ELECTRICAL CHARACTERISTICS (3 V)

V_{DD} = 2.7 V to 4.5 V; T_{amb} = 0 to +70°C for commercial, T_{amb} = –40°C to +85°C for industrial.

SYMBOL	FIGURE	PARAMETER	LIMITS		UNIT
			MIN	MAX	
Address Cycle					
t_{LHLL}	26, 28, 30	ALE pulse width (programmable)	(V1 * t_C) – 10		ns
t_{AVLL}	26, 28, 30	Address valid to ALE de-asserted (set-up)	(V1 * t_C) – 18		ns
t_{LLAX}	26, 28, 30	Address hold after ALE de-asserted	(t_C/2) – 12		ns
Code Read Cycle					
t_{PLPH}	26	$\overline{PSEN}$ pulse width	(V2 * t_C) – 12		ns
t_{LLPL}	26	ALE de-asserted to $\overline{PSEN}$ asserted	(t_C/2) – 9		ns
t_{AVIVA}	26	Address valid to instruction valid, ALE cycle (access time)		(V3 * t_C) – 58	ns
t_{AVIVB}	27	Address valid to instruction valid, non-ALE cycle (access time)		(V4 * t_C) – 52	ns
t_{PLIV}	26	$\overline{PSEN}$ asserted to instruction valid (enable time)		(V2 * t_C) – 52	ns
t_{PHIX}	26	Instruction hold after $\overline{PSEN}$ de-asserted	0		ns
t_{PHIZ}	26	Bus 3-State after $\overline{PSEN}$ de-asserted		t_C – 8	ns
t_{IXUA}	26	Hold time of unlatched part of address after instruction latched	0		ns
Data Read Cycle					
t_{RLRH}	28	$\overline{RD}$ pulse width	(V7 * t_C) – 12		ns
t_{LLRL}	28	ALE de-asserted to $\overline{RD}$ asserted	(t_C/2) – 9		ns
t_{AVDVA}	28	Address valid to data input valid, ALE cycle (access time)		(V6 * t_C) – 58	ns
t_{AVDVB}	29	Address valid to data input valid, non-ALE cycle (access time)		(V5 * t_C) – 52	ns
t_{RLDV}	28	$\overline{RD}$ low to valid data in (enable time)		(V7 * t_C) – 52	ns
t_{RHDX}	28	Data hold time after $\overline{RD}$ de–asserted	0		ns
t_{RHDZ}	28	Bus 3-State after $\overline{RD}$ de-asserted (disable time)		t_C – 8	ns
t_{DXUA}	28	Hold time of unlatched part of address after data latched	0		ns
Data Write Cycle					
t_{WLWH}	30	$\overline{WR}$ pulse width	(V8 * t_C) – 12		ns
t_{LLWL}	30	ALE falling edge to $\overline{WR}$ asserted	(V12 * t_C) – 10		ns
t_{QVWX}	30	Data valid before $\overline{WR}$ asserted (data set-up time)	(V13 * t_C) – 28		ns
t_{WHQX}	30	Data hold time after $\overline{WR}$ de-asserted (Note 6)	(V11 * t_C) – 8		ns
t_{AVWL}	30	Address valid to $\overline{WR}$ asserted (address set-up time) (Note 5)	(V9 * t_C) – 28		ns
t_{UAWH}	30	Hold time of unlatched part of address after $\overline{WR}$ is de-asserted	(V11 * t_C) – 10		ns
Wait Input					
t_{WTH}	31	WAIT stable after bus strobe ($\overline{RD}$, $\overline{WR}$, or $\overline{PSEN}$) asserted		(V10 * t_C) – 40	ns
t_{WTL}	31	WAIT hold after bus strobe ($\overline{RD}$, $\overline{WR}$, or $\overline{PSEN}$) asserted	(V10 * t_C) – 5		ns

NOTES ON PAGE 41.

AC ELECTRICAL CHARACTERISTICS (3 V RANGE) (continued)

This set of parameters is referenced to the XA-S3 clock output.

SYMBOL	FIGURE	PARAMETER	LIMITS		UNIT
			MIN	MAX	
Address Cycle					
t_{CHLH}	26	CLKOUT rising edge to ALE rising edge	–	15	ns
t_{CLLL}	26	CLKOUT falling edge to ALE falling edge	–	11	ns
t_{CHAV}	26	CLKOUT rising edge to address valid	–	29	ns
t_{CHAX}	26	CLKOUT rising edge to address changing (hold time)	2	–	ns
Code Read Cycle					
t_{CHPL}	26	CLKOUT rising edge to $\overline{PSEN}$ asserted	–	16	ns
t_{CHPH}	26	CLKOUT rising edge to $\overline{PSEN}$ de-asserted	–	15	ns
t_{IVCH}	26	Instruction valid to CLKOUT rising edge (setup time)	30	–	ns
t_{CHIX}	26	CLKOUT rising edge to instruction changing (hold time)	0	–	ns
t_{CHIZ}	26	CLKOUT rising edge to Bus 3-State (code read)	–	t_C–8	ns
Data Read Cycle					
t_{CHRL}	28	CLKOUT rising edge to $\overline{RD}$ asserted	–	20	ns
t_{CHRH}	28	CLKOUT rising edge to $\overline{RD}$ de-asserted	–	16	ns
t_{DVCH}	28	Data valid to CLKOUT rising edge (setup time)	28	–	ns
t_{CHDX}	28	CLKOUT rising edge to Data changing (hold time)	0	–	ns
t_{CHDZ}	28	CLKOUT rising edge to Bus 3-State (data read)	–	t_C–8	ns
Data Write Cycle					
t_{CHWL}	30	CLKOUT falling edge to $\overline{WR}$ asserted	–	19	ns
t_{CHWH}	30	CLKOUT rising edge to $\overline{WR}$ de-asserted	–	16	ns
t_{QVCH}	30	Data valid to CLKOUT rising edge (setup time)	4	–	ns
t_{CHQX}	30	CLKOUT rising edge to Data changing (hold time)	0	–	ns
Wait Input					
t_{CHWTH}	31	WAIT valid prior to CLKOUT rising edge[8]	30	4	ns

NOTES:

1. Load capacitance for all outputs = 50 pF.
2. Variables V1 through V13 reflect programmable bus timing, which is programmed via the Bus Timing registers (BTRH and BTRL). Refer to the *XA User Guide* for details of the bus timing settings.
   - V1) This variable represents the programmed width of the ALE pulse as determined by the ALEW bit in the BTRL register. V1 = 0.5 if the ALEW bit = 0, and 1.5 if the ALEW bit = 1.
   - V2) This variable represents the programmed width of the $\overline{PSEN}$ pulse as determined by the CR1 and CR0 bits or the CRA1, CRA0, and ALEW bits in the BTRL register.
     - – For a bus cycle with **no** ALE, V2 = 1 if CR1/0 = 00, 2 if CR1/0 = 01, 3 if CR1/0 = 10, and 4 if CR1/0 = 11. Note that during burst mode code fetches, $\overline{PSEN}$ does not exhibit transitions at the boundaries of bus cycles. V2 still applies for the purpose of determining peripheral timing requirements.
     - – For a bus cycle **with** an ALE, V2 = the total bus cycle duration (2 if CRA1/0 = 00, 3 if CRA1/0 = 01, 4 if CRA1/0 = 10, and 5 if CRA1/0 = 11) minus the number of clocks used by ALE (V1 + 0.5) = 2.
       Example: if CRA1/0 = 10 and ALEW = 1, the V2 = 4 – (1.5 + 0.5) = 2.
   - V3) This variable represents the programmed length of an entire code read cycle **with** ALE. This time is determined by the CRA1 and CRA0 bits in the BTRL register. V3 = the total bus cycle duration (2 if CRA1/0 = 00, 3 if CRA1/0 = 01, 4 if CRA1/0 = 10, and 5 if CRA1/0 = 11).
   - V4) This variable represents the programmed length of an entire code read cycle with **no** ALE. This time is determined by the CR1 and CR0 bits in the BTRL register. V4 = 1 if CR1/0 = 00, 2 if CR1/0 = 01, 3 if CR1/0 = 10, and 4 if CR1/0 = 11.
   - V5) This variable represents the programmed length of an entire data read cycle with **no** ALE. This time is determined by the DR1 and DR0 bits in the BTRH register. V5 = 1 if DR1/0 = 00, 2 if DR1/0 = 01, 3 if DR1/0 = 10, and 4 if DR1/0 = 11.
   - V6) This variable represents the programmed length of an entire data read cycle **with** ALE. The time is determined by the DRA1 and DRA0 bits in the BTRH register. V6 = the total bus cycle duration (2 if DRA1/0 = 00, 3 if DRA1/0 = 01, 4 if DRA1/0 = 10, and 5 if DRA1/0 = 11).

V7) This variable represents the programmed width of the $\overline{RD}$ pulse as determined by the DR1 and DR0 bits or the DRA1, DRA0 in the BTRH register, and the SLEW bit in the BTRL register. Note that during a 16-bit operation on an 8-bit external bus, $\overline{RD}$ remains low and does not exhibit a transition between the first and second byte bus cycles. V7 still applies for the purpose of determining peripheral timing requirements. The timing for the first byte is for a bus cycle with ALE, the timing for the second byte is for a bus cycle with no ALE.
- For a bus cycle with **no** ALE, V7 = 1 if DR1/0 = 00, 2 if DR1/0 = 01, 3 if DR1/0 = 10, and 4 if DR1/0 = 11.
- For a bus cycle **with** an ALE, V7 = the total bus cycle duration (2 if DRA1/0 = 00, 3 if DRA1/0 = 01, 4 if DRA1/0 = 10, and 5 if DRA1/0 = 11) minus the number of clocks used by ALE (V1 + 0.5).
  Example: if DRA1/0 = 00 and ALEW = 0, then V7 = 2 – (0.5 +0.5) = 1.

V8) This variable represents the programmed width of the $\overline{WRL}$ and/or $\overline{WRH}$ pulse as determined by the WM1 bit in the BTRL register. V8 = 1 if WM1 = 0, and 2 if WM1 = 1.

V9) This variable represents the programmed address setup time for a write as determined by the data write cycle duration (defined by DW1 and DW0 or the DWA1 and DWA0 bits in the BTRH register), the WM0 bit in the BTRL register, and the value of V8.
- For a bus cycle **with** an ALE, V9 = the total bus write cycle duration (2 if DWA1/0 = 00, 3 if DWA1/0 = 01, 4 if DWA1/0 = 10, and 5 if DWA1/0 = 11) minus the number of clocks used by the $\overline{WRL}$ and/or $\overline{WRH}$ pulse (V8) minus the number of clocks used by data hold time (0 if WM0 = 0 and 1 if WM0 = 1).
  Example: If DWA1/0 = 10, WM0 = 1, and WM1 = 1, then V9 = 4 – 1 – 2 = 1.
- For a bus cycle with **no** ALE, V9 = the total bus cycle duration (2 if DW1/0 = 00, 3 if DW1/0 = 01, 4 if DW1/0 = 10, and 5 if DW1/0 = 11) minus the number of clocks used by the $\overline{WRL}$ and/or $\overline{WRH}$ pulse (V8), minus the number of clocks used by data hold time (0 if WMo = 0 and 1 if WM0 = 1).
  Example: If DW1/0 = 11, WM0 = 1, and WM1 = 0, then V9 = 5 – 1 – 1 = 3.

V10) This variable represents the length of a bus strobe for calculation of WAIT set-up and hold times. The strobe may be $\overline{RD}$ (for data read cycles), $\overline{WRL}$ and/or $\overline{WRH}$ (for data write cycles), or $\overline{PSEN}$ (for code read cycles), depending on the type of bus cycle being widened by WAIT. V10 = 2 for WAIT associated with a code read cycle using $\overline{PSEN}$. V10 = V8 for a data write cycle using $\overline{WRL}$ and/or $\overline{WRH}$. V10 = V7 – 1 for a data read cycle using $\overline{RD}$. This means that a single clock data read cycle cannot be stretched using WAIT. If WAIT is used to vary the duration of data read cycles, the $\overline{RD}$ strobe width must be set to be at least two clocks in duration. Also see Note 4.

V11) This variable represents the programmed write hold time as determined by the WM0 bit in the BTRL register. V11 0 if the WM0 bit = 0, and 1 if the WM0 bit = 1.

V12) this variable represents the programmed period between the end of the ALE pulse and the beginning of the $\overline{WRL}$ and/or $\overline{WRH}$ pulse as determined by the data write cycle duration (defined by the DWA1 and DWA0 bits in the BTRH register), the WM0 bit in the BTRL register, and the values of V1 and V8. V12 = the total bus cycle duration (2 if DWA1/0 = 00, 3 if DWA1/0 = 01, 4 if DWA1/0 = 10, and 5 if DWA1/0 = 11) minus the number of clocks used by the $\overline{WRL}$ and/or $\overline{WRH}$ pulse (V8), minus the number of clocks used by data hold time (0 if WM0 = 0 and 1 if WM0 = 1), minus the width of the ALE pulse (V1).
Example: If SWA1/0 = 11, WM0 = 1, WM1 = 0, and ALEW = 1, then V12 = 5 – 1 – 1 – 1.5 = 1.5.

V13) This variable represents the programmed data setup time for a write as determined by the data write cycle duration (defined by DW1 and DW0 or the DWA1 and DWA0 bits in the BTRH register), the WM0 bit in the BTRL register, and the values of V1 and V8.
- For a bus cycle **with** an ALE, V13 = the total bus cycle duration (2 if DWA1/0 = 00, 3 if DWA1/0 = 01, 4 if DWA1/0 = 10, and 5 if DWA1/0 = 11) minus the number of clocks used by the $\overline{WRL}$ and/or $\overline{WRH}$ pulse (V8), minus the number of clocks used by data hold time (0 if WM0 = 0 and 1 if WM0 = 1), minus the number of clocks used by ALE (V1 + 0.5).
  Example: If DWA1/0 = 11, WM0 = 1, WM1 = 1, and ALEW = 0, then V13 = 5 – 1 – 2 – 1 = 1.
- For a bus cycle with **no** ALE, V13 = the total bus cycle duration (2 if DW1/0 = 00, 3 if DW1/0 = 01, 4 if DW1/0 = 10, and 5 if DW1/0 = 11) minus the number of clocks used by the $\overline{WRL}$ and/or $\overline{WRH}$ pulse (V8), minus the number of clocks used by data hold time (0 if WM0 = 0 and 1 if WM0 = 1).
  Example: If DW1/0 = 01, WM0 = 1, and WM1 = 0, then V13 = 3 – 1 – 1 = 1.

3. Not all combinations of bus timing configuration values result in valid bus cycles. Please refer to the *XA User Guide* section on the External Bus for details.
4. When code is being fetched for execution on the external bus, a burst mode fetch is used that dows not have $\overline{PSEN}$ edges in every fetch cycle. This would be A3–A0 for an 8-bit bus, and A3–A1 for a 16-bit bus. Also, a 16-bit read operation conducted on an 8-bit wide bus similarly does not include two separate $\overline{RD}$ strobes. So, a rising edge on the low order address line (A0) must be used to trigger a WAIT in the second half of such a cycle.
5. This parameter is provided for peripherals that have the data clocked in on the falling edge of the $\overline{WR}$ strobe. This is not usually the case and in most applications this parameter is not used.
6. Please note that the XA-S3 requires that extended data bus hold time (WM0 = 1) to be used with external bus write cycles.
7. Applies only to an external clock source, not when a crystal is connected to the XTAL1 and XTAL2 pins.
8. WAIT should not change between these times.

AC WAVEFORMS

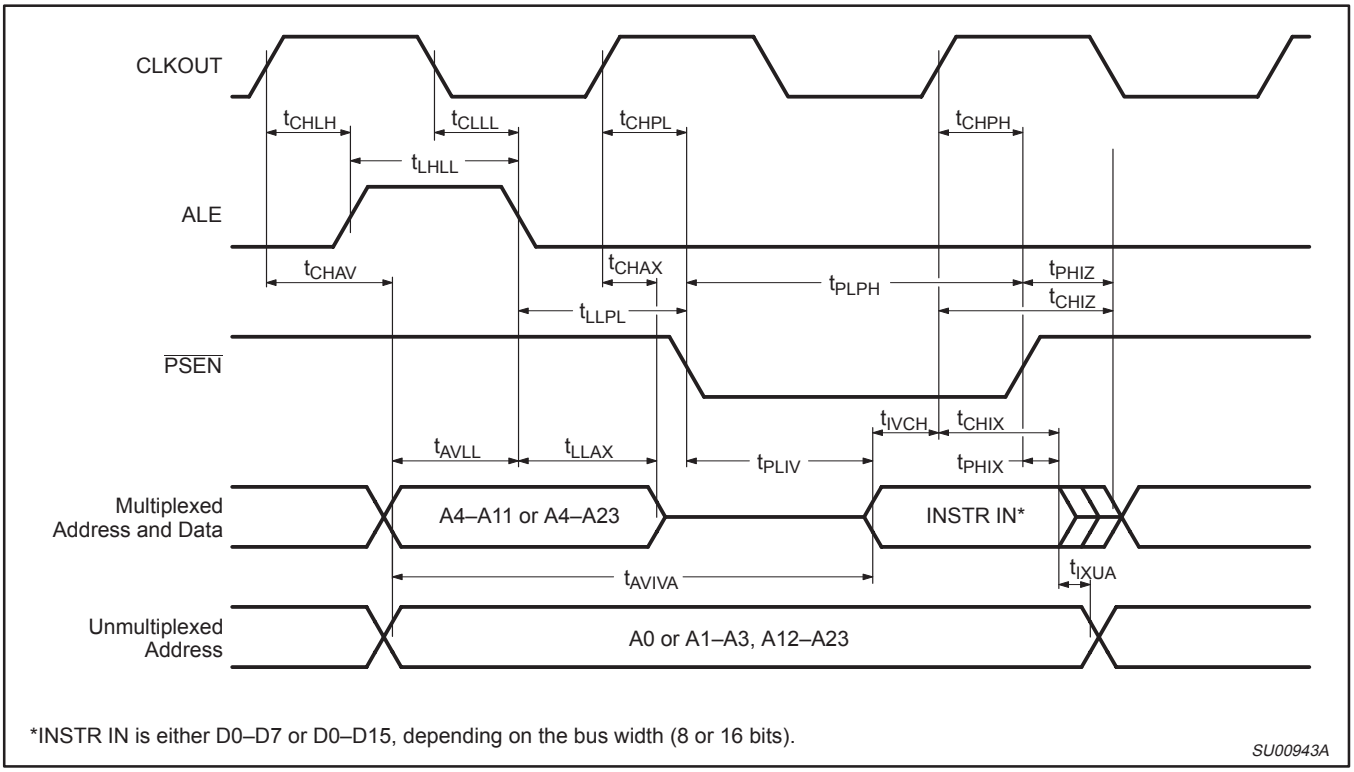

Figure 26. External Program Memory Read Cycle (ALE Cycle)

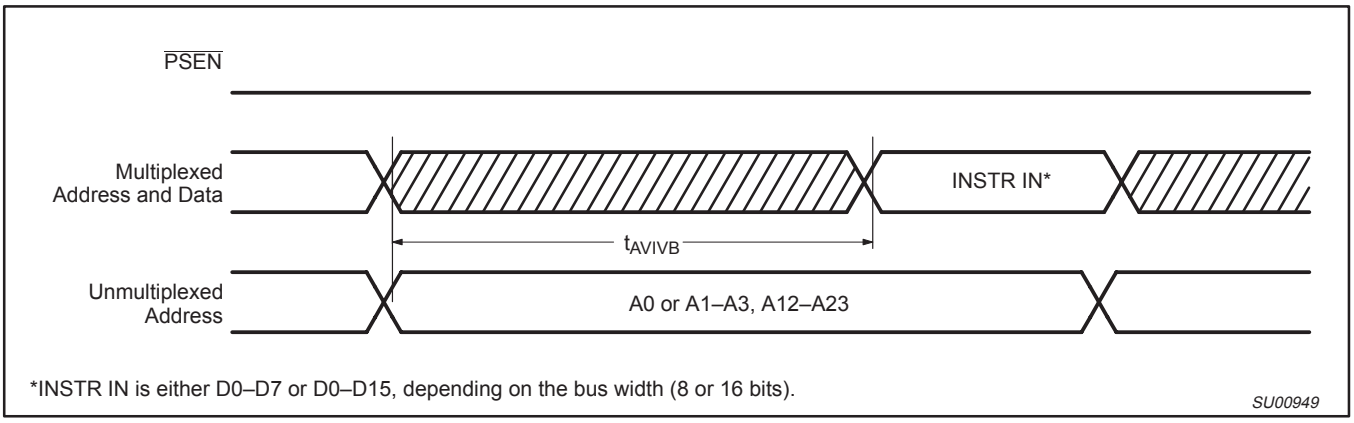

Figure 27. External Program Memory Read Cycle (Non-ALE Cycle)

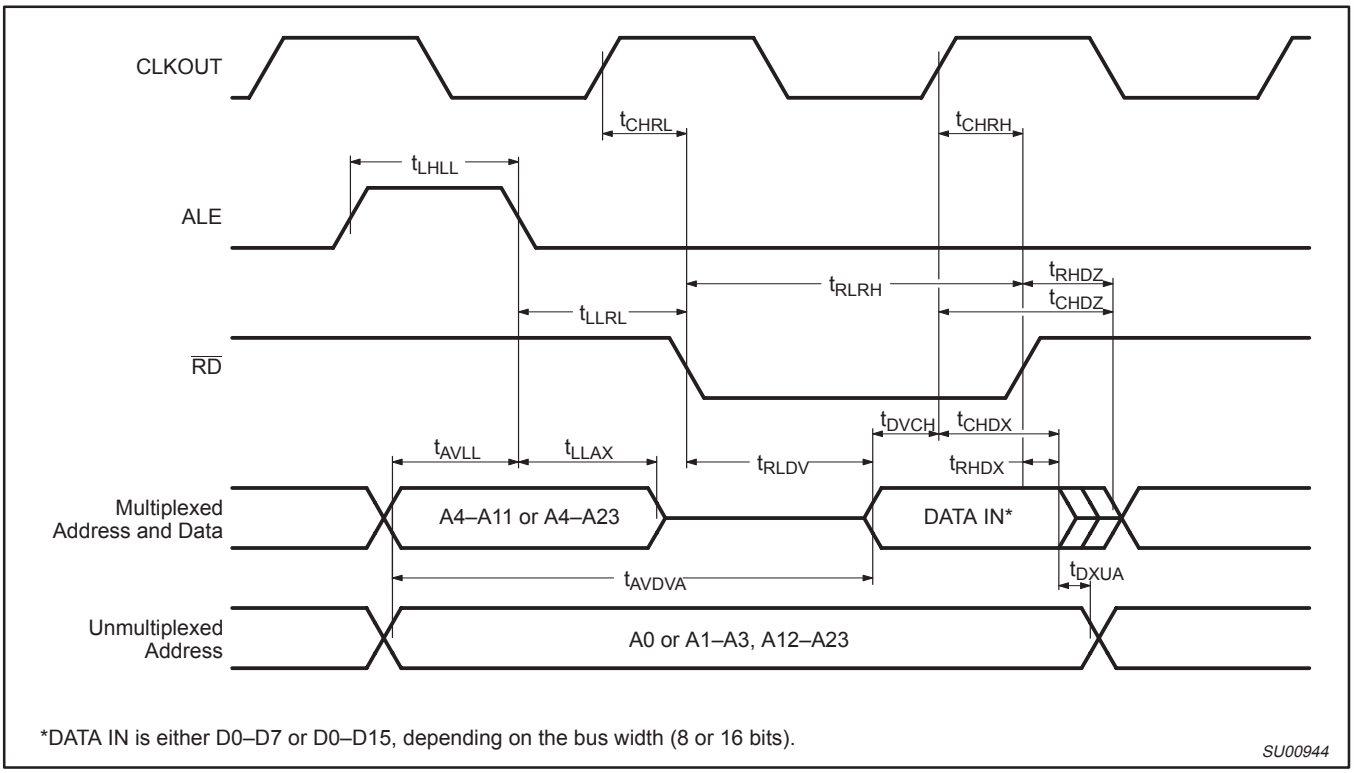

Figure 28. External Data Memory Read Cycle (ALE Cycle)

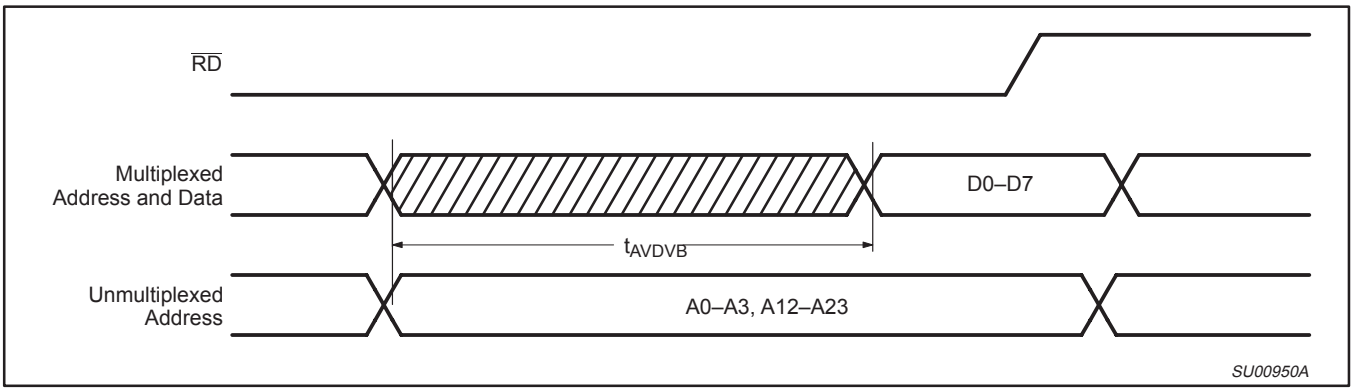

Figure 29. External Data Memory Read Cycle (Non-ALE Cycle)

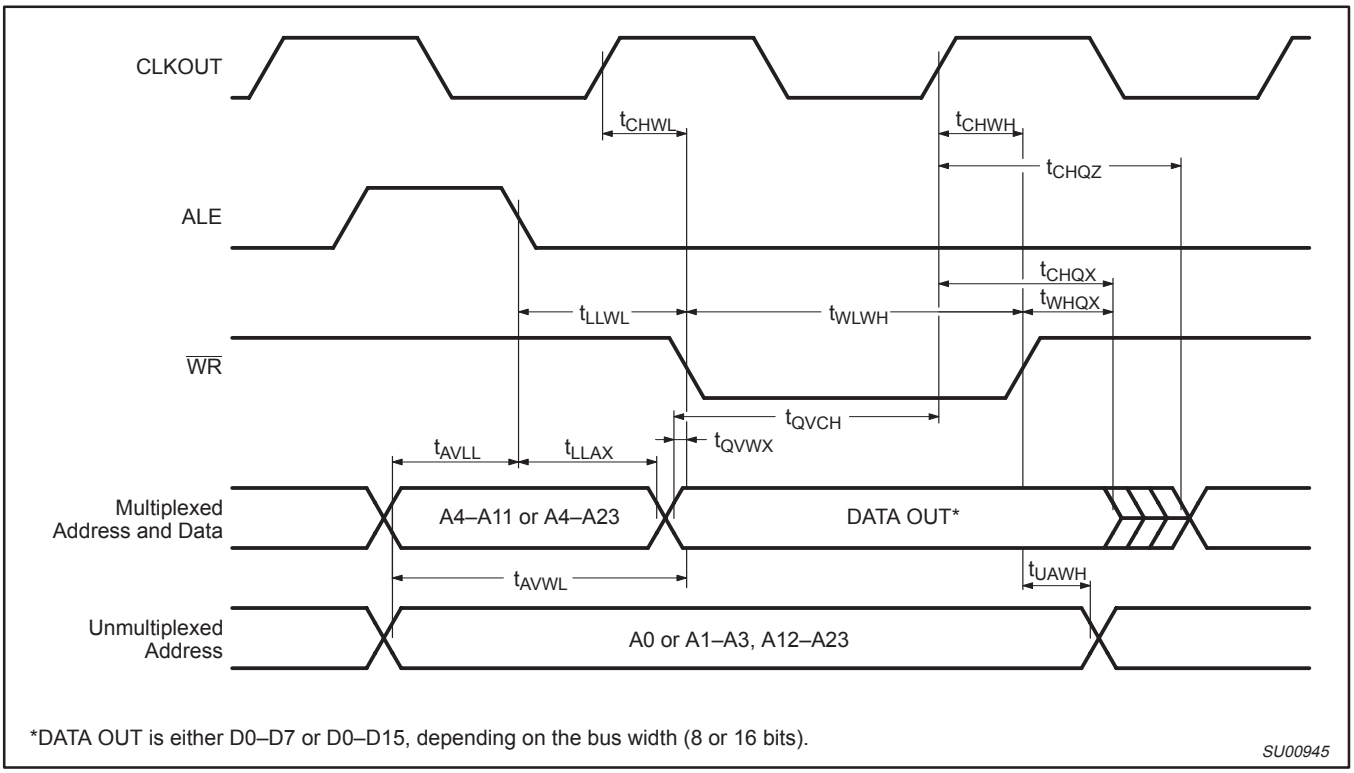

Figure 30. External Data Memory Write Cycle

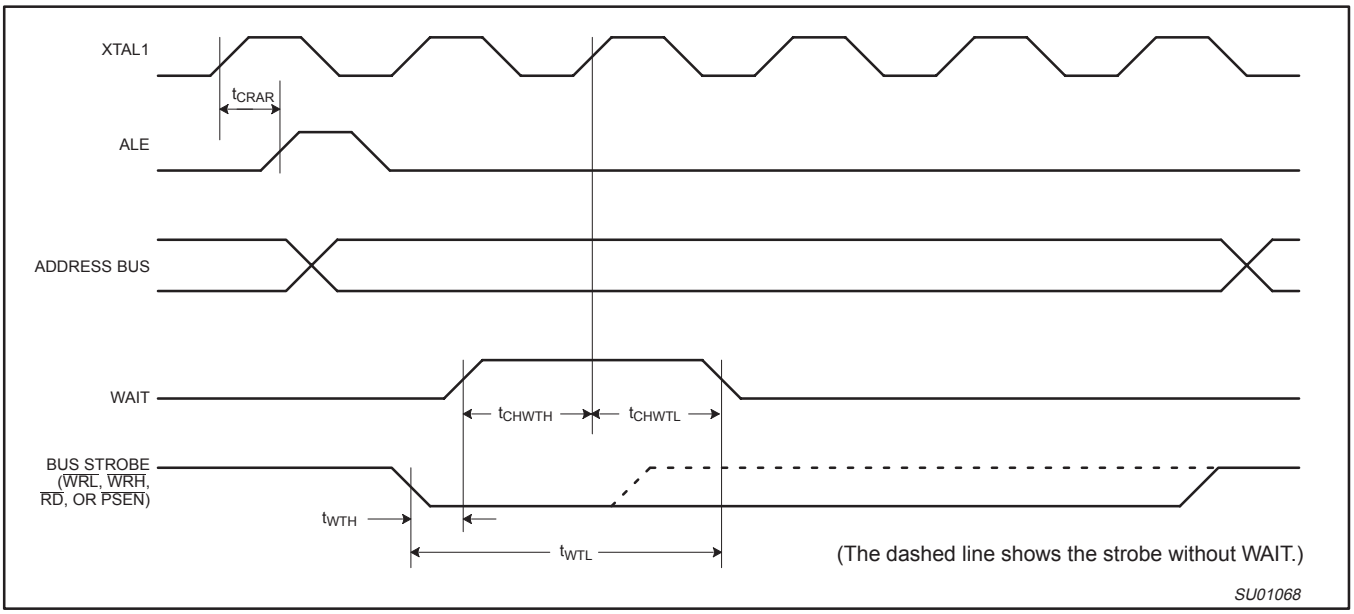

Figure 31. WAIT Signal Timing

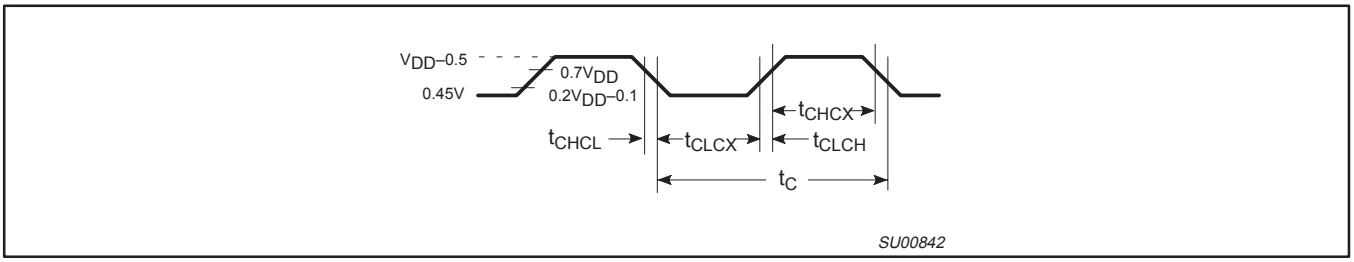

Figure 32. External Clock Drive

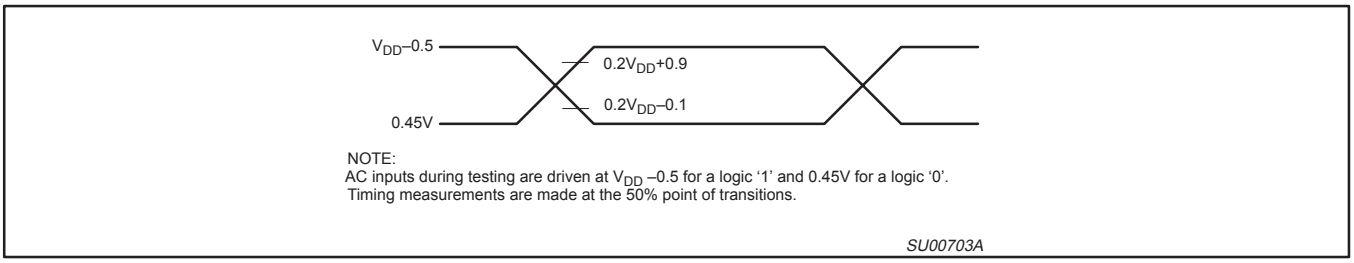

Figure 33. AC Testing Input/Output

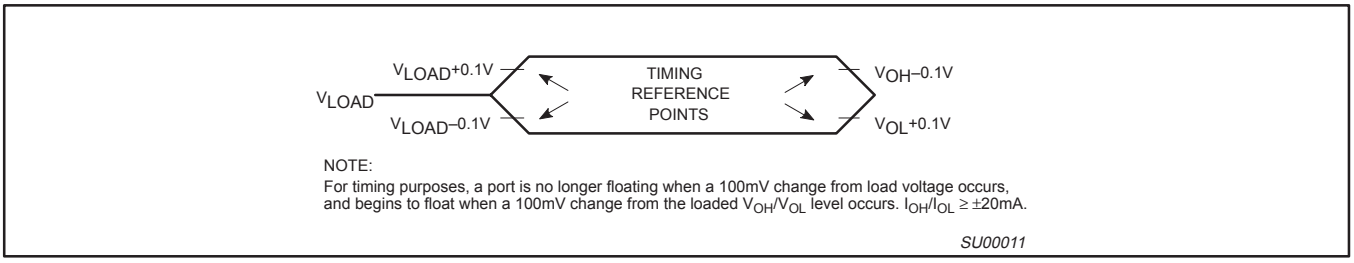

Figure 34. Float Waveform

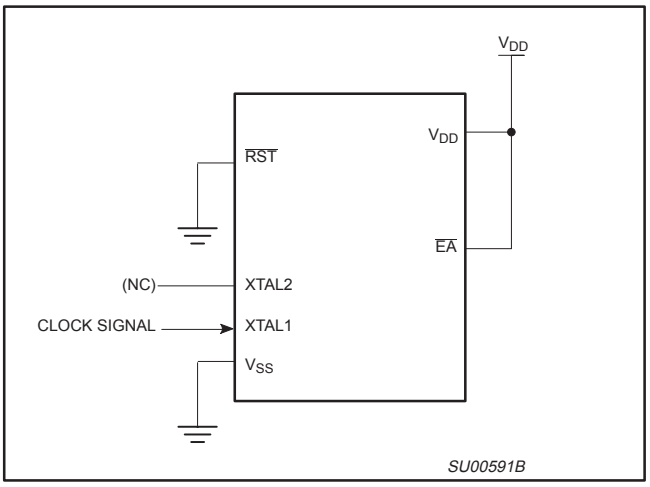

Figure 35. I_{DD} Test Condition, Active Mode
All other pins are disconnected

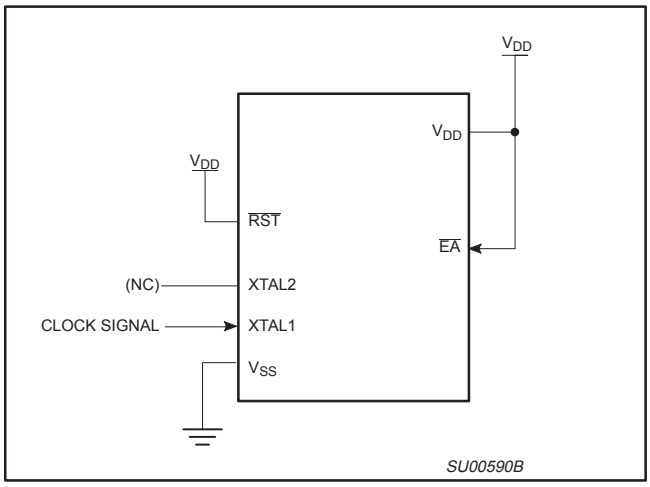

Figure 36. I_{DD} Test Condition, Idle Mode
All other pins are disconnected

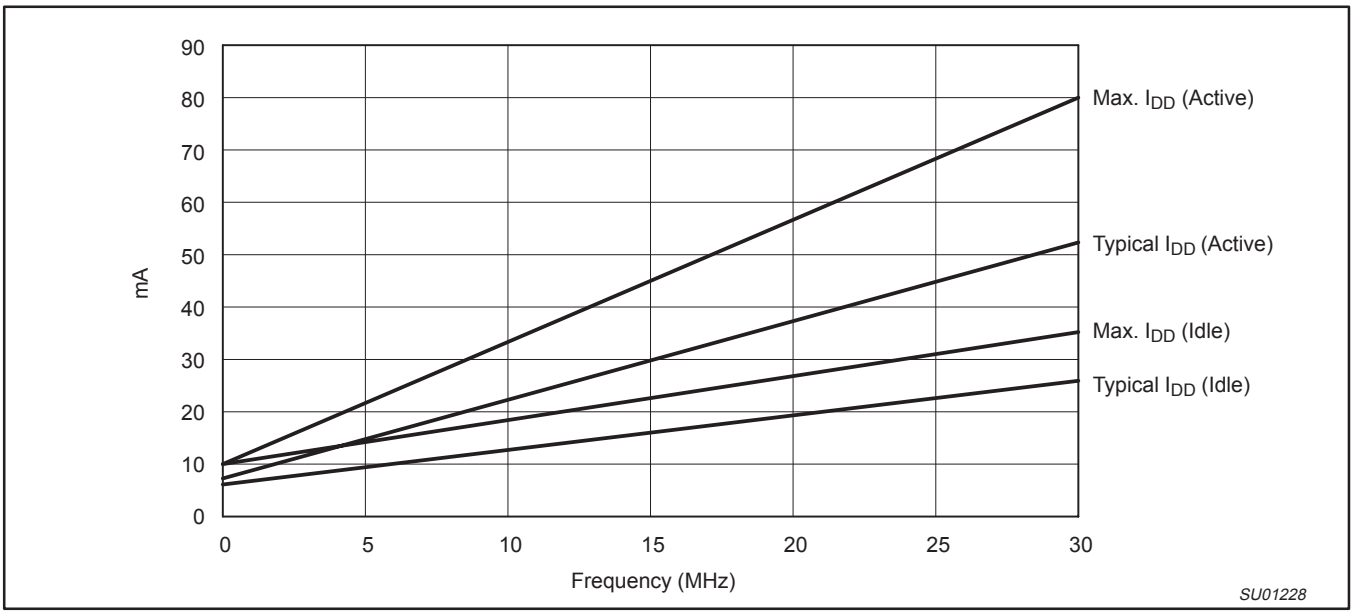

Figure 37. I_{DD} vs. Frequency
Valid only within frequency specification of the device under test.

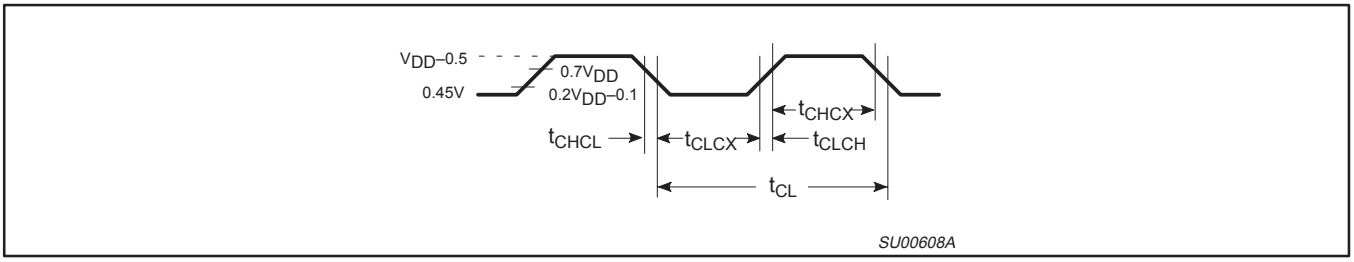

Figure 38. Clock Signal Waveform for I_{DD} Tests in Active and Idle Modes
t_{CLCH} = t_{CHCL} = 5 ns

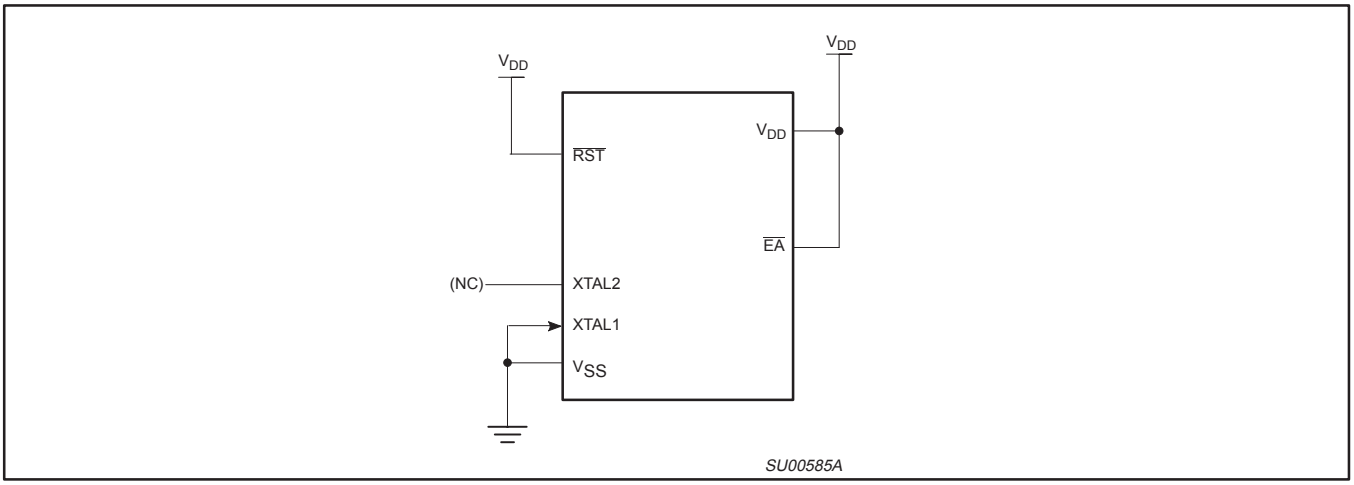

Figure 39. I_{DD} Test Condition, Power Down Mode
All other pins are disconnected. V_{DD}=2 V to 5.5 V

EPROM CHARACTERISTICS

The XA-S3 is programmed by using a modified Improved Quick-Pulse Programming™ algorithm. This algorithm is essentially the same as that used by 80C51 family EPROM parts. However different pins are used for many programming functions.

The XA-S3 contains three signature bytes that can be read and used by an EPROM programming system to identify the device. The signature bytes identify the device as an XA-S3 manufactured by Philips.

Security Bits

With none of the security bits programmed the code in the program memory can be verified. When only security bit 1 is programmed, MOVC instructions executed from external program memory are disabled from fetching code bytes from the internal memory. All further programming of the EPROM is disabled. When security bits 1 and 2 are programmed, in addition to the above, verify mode is disabled. When all three security bits are programmed, all of the conditions above apply and all external program memory execution is disabled. (See Table 6.)

Table 6. Program Security Bits

PROGRAM LOCK BITS				PROTECTION DESCRIPTION
	SB1	SB2	SB3	
1	U	U	U	No Program Security features enabled.
2	P	U	U	MOVC instructions executed from external program memory are disabled from fetching code bytes from internal memory and further programming of the EPROM is disabled.
3	P	P	U	Same as 2, also verify is disabled.
4	P	P	P	Same as 3, external execution is disabled. Internal data RAM is not accessible.

NOTES:
1. P – programmed. U – unprogrammed.
2. Any other combination of the security bits is not defined.

ROM CODE SUBMISSION

When submitting ROM code for the XA-S3, the following must be specified:
1. 32k byte user ROM data
2. ROM security bits.

ADDRESS	CONTENT	BIT(S)	COMMENT
0000H to 7FFFH	DATA	7:0	User ROM Data
8020H	SEC	0	ROM Security Bit 1
8020H	SEC	1	ROM Security Bit 2 0 = enable security 1 = disable security
8020H	SEC	3	ROM Security Bit 3 0 = enable security 1 = disable security

™Trademark phrase of Intel Corporation.

PLCC68: plastic leaded chip carrier; 68 leads

SOT188-2

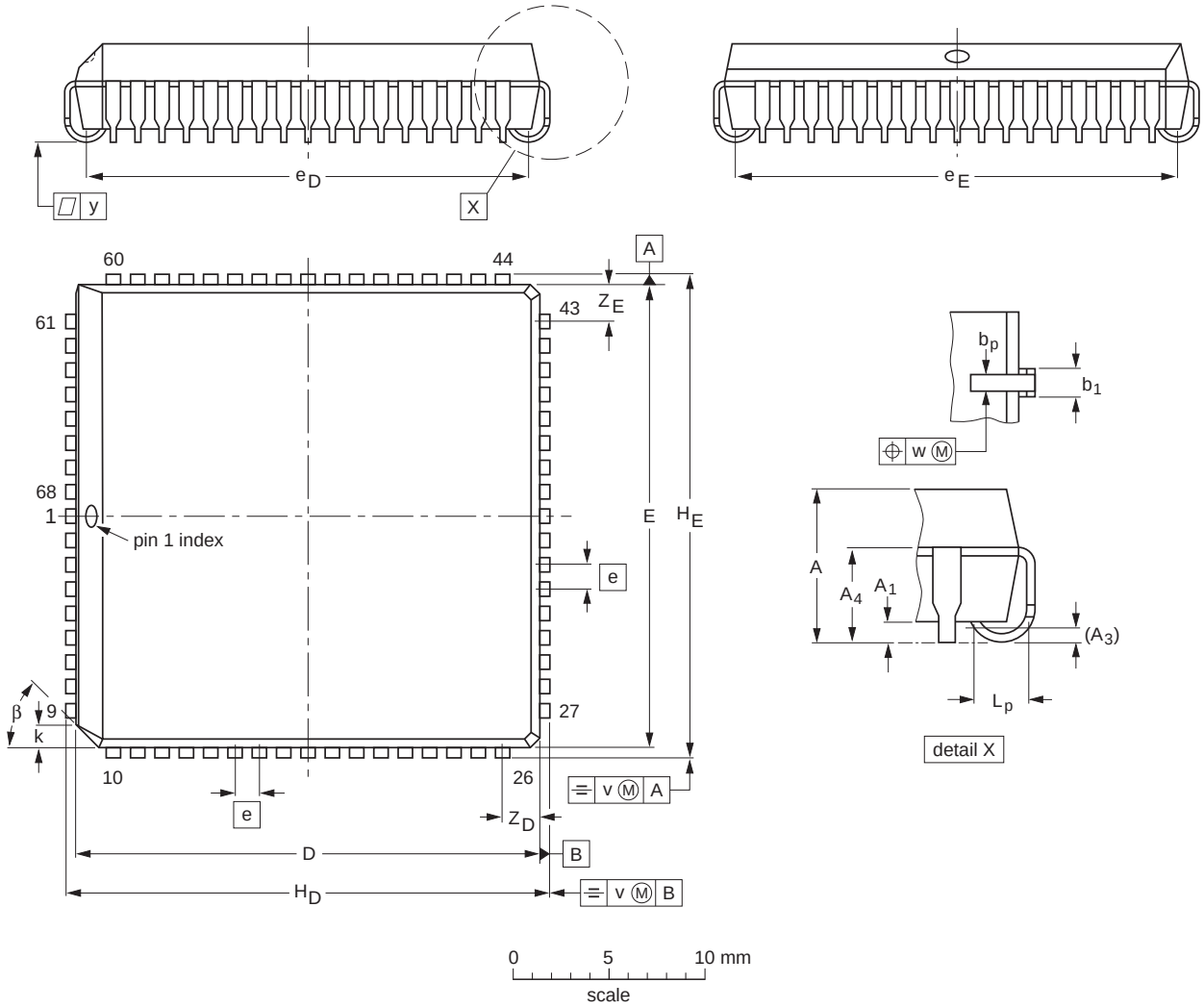

DIMENSIONS (mm dimensions are derived from the original inch dimensions)

UNIT	A	A_1 min.	A_3	A_4 max.	b_p	b_1	D(1)	E(1)	e	e_D	e_E	H_D	H_E	k	L_p	v	w	y	Z_D(1) max.	Z_E(1) max.	β
mm	4.57 4.19	0.51	0.25	3.3	0.53 0.33	0.81 0.66	24.33 24.13	24.33 24.13	1.27	23.62 22.61	23.62 22.61	25.27 25.02	25.27 25.02	1.22 1.07	1.44 1.02	0.18	0.18	0.1	2.16	2.16	45°
inches	0.180 0.165	0.02	0.01	0.13	0.021 0.013	0.032 0.026	0.958 0.950	0.958 0.950	0.05	0.93 0.89	0.93 0.89	0.995 0.985	0.995 0.985	0.048 0.042	0.057 0.040	0.007	0.007	0.004	0.085	0.085	

Note

1. Plastic or metal protrusions of 0.25 mm (0.01 inch) maximum per side are not included.

OUTLINE VERSION	REFERENCES				EUROPEAN PROJECTION	ISSUE DATE
	IEC	JEDEC	JEITA			
SOT188-2	112E10	MS-018	EDR-7319			~~99-12-27~~ 01-11-14

LQFP80: plastic low profile quad flat package; 80 leads; body 12 x 12 x 1.4 mm **SOT315-1**

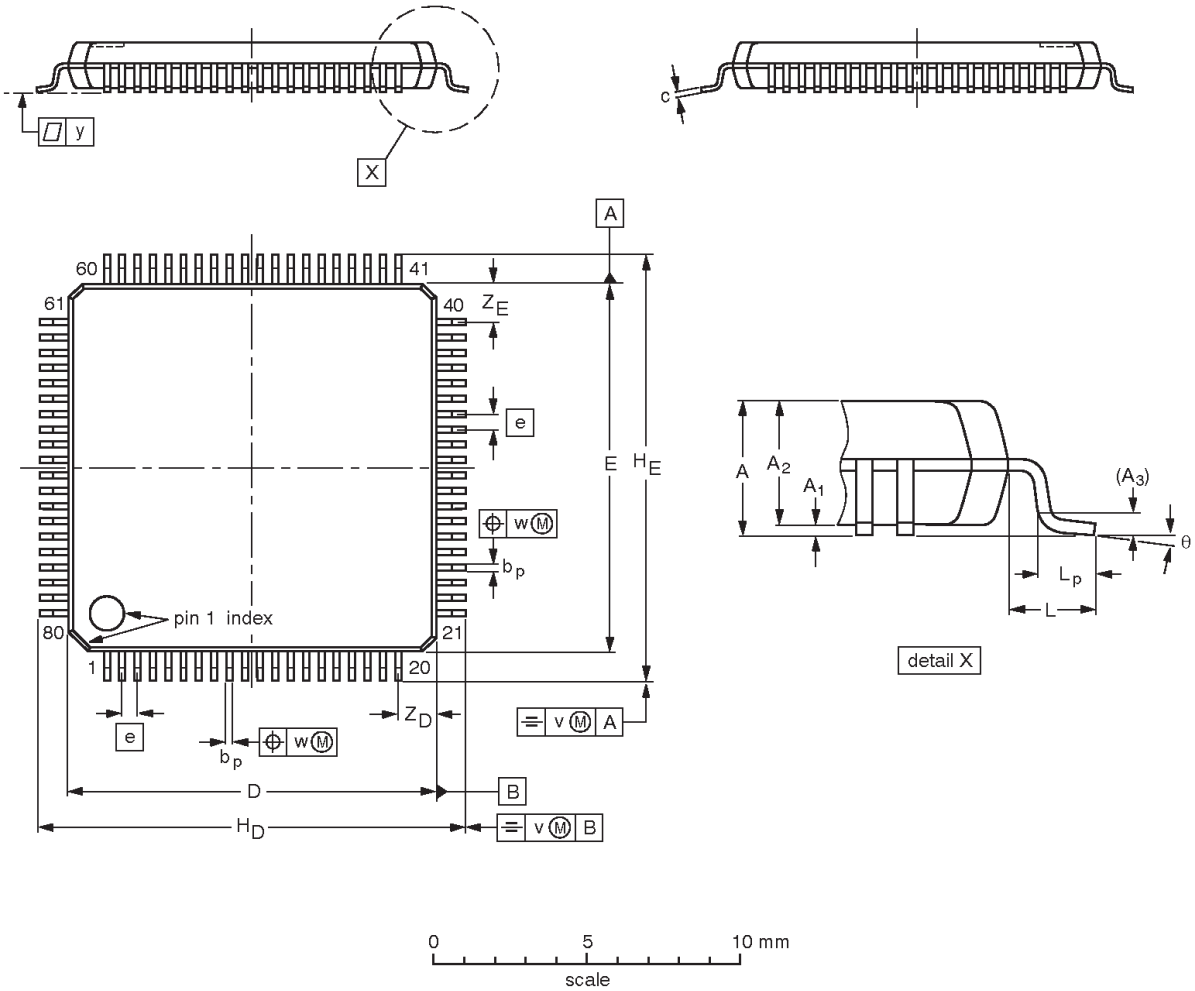

DIMENSIONS (mm are the original dimensions)

UNIT	A max.	A_1	A_2	A_3	b_p	c	D(1)	E(1)	e	H_D	H_E	L	L_p	v	w	y	Z_D(1)	Z_E(1)	θ
mm	1.6	0.16 0.04	1.5 1.3	0.25	0.27 0.13	0.18 0.12	12.1 11.9	12.1 11.9	0.5	14.15 13.85	14.15 13.85	1.0	0.75 0.30	0.2	0.15	0.1	1.45 1.05	1.45 1.05	7° 0°

Note

1. Plastic or metal protrusions of 0.25 mm maximum per side are not included.

OUTLINE VERSION	REFERENCES				EUROPEAN PROJECTION	ISSUE DATE
	IEC	JEDEC	EIAJ			
SOT315-1	136E15	MS-026				~~99-12-27~~ 00-01-19

NOTES

DATA SHEET STATUS

DOCUMENT STATUS(1)	PRODUCT STATUS(2)	DEFINITION
Objective data sheet	Development	This document contains data from the objective specification for product development.
Preliminary data sheet	Qualification	This document contains data from the preliminary specification.
Product data sheet	Production	This document contains the product specification.

Notes

1. Please consult the most recently issued document before initiating or completing a design.
2. The product status of device(s) described in this document may have changed since this document was published and may differ in case of multiple devices. The latest product status information is available on the Internet at URL http://www.nxp.com.

DISCLAIMERS

Limited warranty and liability — Information in this document is believed to be accurate and reliable. However, NXP Semiconductors does not give any representations or warranties, expressed or implied, as to the accuracy or completeness of such information and shall have no liability for the consequences of use of such information. NXP Semiconductors takes no responsibility for the content in this document if provided by an information source outside of NXP Semiconductors.

In no event shall NXP Semiconductors be liable for any indirect, incidental, punitive, special or consequential damages (including - without limitation - lost profits, lost savings, business interruption, costs related to the removal or replacement of any products or rework charges) whether or not such damages are based on tort (including negligence), warranty, breach of contract or any other legal theory.

Notwithstanding any damages that customer might incur for any reason whatsoever, NXP Semiconductors' aggregate and cumulative liability towards customer for the products described herein shall be limited in accordance with the *Terms and conditions of commercial sale* of NXP Semiconductors.

Right to make changes — NXP Semiconductors reserves the right to make changes to information published in this document, including without limitation specifications and product descriptions, at any time and without notice. This document supersedes and replaces all information supplied prior to the publication hereof.

Suitability for use — NXP Semiconductors products are not designed, authorized or warranted to be suitable for use in life support, life-critical or safety-critical systems or equipment, nor in applications where failure or malfunction of an NXP Semiconductors product can reasonably be expected to result in personal injury, death or severe property or environmental damage. NXP Semiconductors and its suppliers accept no liability for inclusion and/or use of NXP Semiconductors products in such equipment or applications and therefore such inclusion and/or use is at the customer's own risk.

Applications — Applications that are described herein for any of these products are for illustrative purposes only. NXP Semiconductors makes no representation or warranty that such applications will be suitable for the specified use without further testing or modification.

Customers are responsible for the design and operation of their applications and products using NXP Semiconductors products, and NXP Semiconductors accepts no liability for any assistance with applications or customer product design. It is customer's sole responsibility to determine whether the NXP Semiconductors product is suitable and fit for the customer's applications and products planned, as well as for the planned application and use of customer's third party customer(s). Customers should provide appropriate design and operating safeguards to minimize the risks associated with their applications and products.

NXP Semiconductors does not accept any liability related to any default, damage, costs or problem which is based on any weakness or default in the customer's applications or products, or the application or use by customer's third party customer(s). Customer is responsible for doing all necessary testing for the customer's applications and products using NXP Semiconductors products in order to avoid a default of the applications and the products or of the application or use by customer's third party customer(s). NXP does not accept any liability in this respect.

Limiting values — Stress above one or more limiting values (as defined in the Absolute Maximum Ratings System of IEC 60134) will cause permanent damage to the device. Limiting values are stress ratings only and (proper) operation of the device at these or any other conditions above those given in the Recommended operating conditions section (if present) or the Characteristics sections of this document is not warranted. Constant or repeated exposure to limiting values will permanently and irreversibly affect the quality and reliability of the device.

Terms and conditions of commercial sale — NXP Semiconductors products are sold subject to the general terms and conditions of commercial sale, as published at http://www.nxp.com/profile/terms, unless otherwise agreed in a valid written individual agreement. In case an individual agreement is concluded only the terms and conditions of the respective agreement shall apply. NXP Semiconductors hereby expressly objects to applying the customer's general terms and conditions with regard to the purchase of NXP Semiconductors products by customer.

No offer to sell or license — Nothing in this document may be interpreted or construed as an offer to sell products that is open for acceptance or the grant, conveyance or implication of any license under any copyrights, patents or other industrial or intellectual property rights.

Export control — This document as well as the item(s) described herein may be subject to export control regulations. Export might require a prior authorization from national authorities.

Quick reference data — The Quick reference data is an extract of the product data given in the Limiting values and Characteristics sections of this document, and as such is not complete, exhaustive or legally binding.

Non-automotive qualified products — Unless this data sheet expressly states that this specific NXP Semiconductors product is automotive qualified, the product is not suitable for automotive use. It is neither qualified nor tested in accordance with automotive testing or application requirements. NXP Semiconductors accepts no liability for inclusion and/or use of non-automotive qualified products in automotive equipment or applications.

In the event that customer uses the product for design-in and use in automotive applications to automotive specifications and standards, customer (a) shall use the product without NXP Semiconductors' warranty of the product for such automotive applications, use and specifications, and (b) whenever customer uses the product for automotive applications beyond NXP Semiconductors' specifications such use shall be solely at customer's own risk, and (c) customer fully indemnifies NXP Semiconductors for any liability, damages or failed product claims resulting from customer design and use of the product for automotive applications beyond NXP Semiconductors' standard warranty and NXP Semiconductors' product specifications.

Translations — A non-English (translated) version of a document is for reference only. The English version shall prevail in case of any discrepancy between the translated and English versions.

TRADEMARKS

Notice: All referenced brands, product names, service names and trademarks are the property of their respective owners.

I²C-bus — logo is a trademark of NXP B.V.

NXP Semiconductors

Customer notification

This data sheet was changed to reflect the new company name NXP Semiconductors.
Changes to content include: Corrected SOT188-3 to SOT188-2; changed data sheet specification to Product; updated legal definitions and disclaimers.

Contact information

For additional information please visit: **http://www.nxp.com**
For sales offices addresses send e-mail to: **salesaddresses@nxp.com**

© NXP B.V. 2013

All rights are reserved. Reproduction in whole or in part is prohibited without the prior written consent of the copyright owner.

The information presented in this document does not form part of any quotation or contract, is believed to be accurate and reliable and may be changed without notice. No liability will be accepted by the publisher for any consequence of its use. Publication thereof does not convey nor imply any license under patent- or other industrial or intellectual property rights.

Printed in The Netherlands R05/10/pp54 Date of release: 2013 Sep 04 Document order number: 9397 750 07816