THIS DRAWING IS UNPUBLISHED. RELEASED FOR PUBLICATION –,– .
© COPYRIGHT – By – ALL RIGHTS RESERVED.

LOC	DIST
J	—

REVISIONS

P	LTR	DESCRIPTION	DATE	DWN	APVD
	A1	REVISED ECR-15-000191	27JAN2015	TS	KB

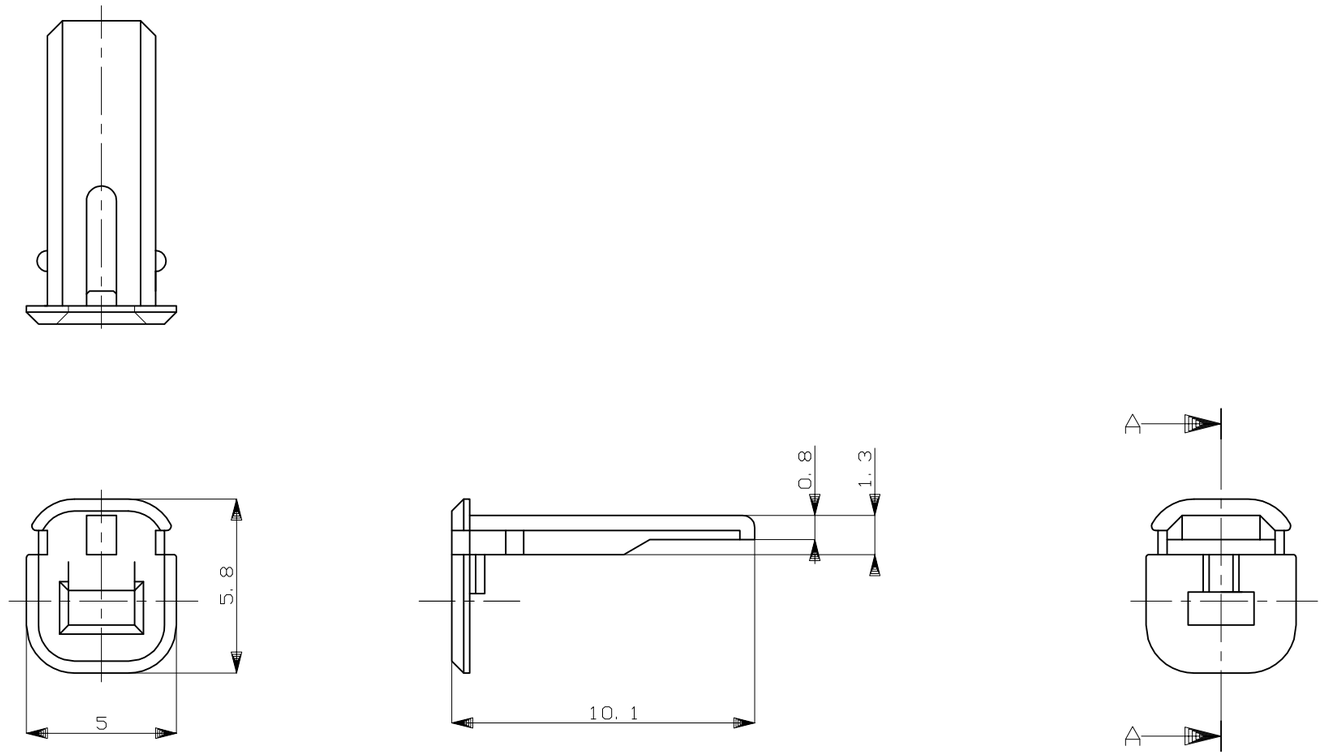

1. 本品は、プラグハウジング型番174877に装着される。

1. TO BE MATED WITH PLUG HOUSING (PN 174877)

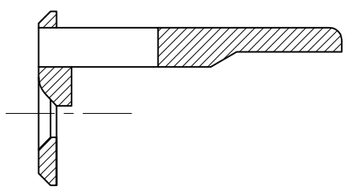

SECTION
断面 A–A

HB	自然色 (NATURAL)	1-174878-1
V-2	黄 (YELLOW)	174878-7
使用材料難燃グレード (FLAMMABILITY OF MATERIAL)	色 (COLOR)	型番 (PART NUMBER)

THIS DRAWING IS A CONTROLLED DOCUMENT.

DIMENSIONS: mm

TOLERANCES UNLESS OTHERWISE SPECIFIED:
0 PLC ± –
1 PLC ± –
2 PLC ± –
3 PLC ± –
4 PLC ± –
ANGLES ± –

GENERAL TOLERANCE
0 < ＊ ≦ 10 : ±0.2
10 < ＊ ≦ 30 : ±0.25
30 < ＊ ≦ 100 : ±0.3
ANGLES : ±3°

MATERIAL: PBT

FINISH: –

DWN	K.ODA	10/19'87
CHK	Y.MATSUSAKA	10/20'87
APVD	M.NOGUCHI	10/20'87
PRODUCT SPEC	108-5262	
APPLICATION SPEC	—	
WEIGHT	—	

TE Connectivity

NAME: 1P. ECONOSEAL J-MARKII+ CONNECTOR DOUBLE LOCK PLATE FOR PLUG HOUSING

SIZE	CAGE CODE	DRAWING NO	RESTRICTED TO
A3	00779	C-174878	—

CUSTOMER DRAWING

SCALE	SHEET	REV
5:1	1 OF 1	A1