THIS DRAWING IS UNPUBLISHED. RELEASED FOR PUBLICATION 2008
© COPYRIGHT 2008 BY TYCO ELECTRONICS CORPORATION. ALL RIGHTS RESERVED.

LOC	DIST
E	B

REVISIONS

P	LTR	DESCRIPTION	DATE	DWN	APVD
	BA	NEW RELEASE	30-Jul-08	SM	St.P

1 AVAILABLE IN DIFFERENT SHAFT LENGTHS (L) SEE DATA SHEET

2 FOR FURTHER INFORMATION SEE DATA SHEET FOR 23 SERIES-SPINDLE OPERATED POTENTIOMETER

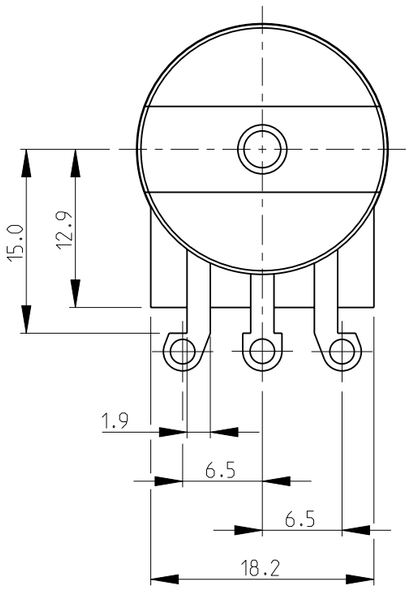

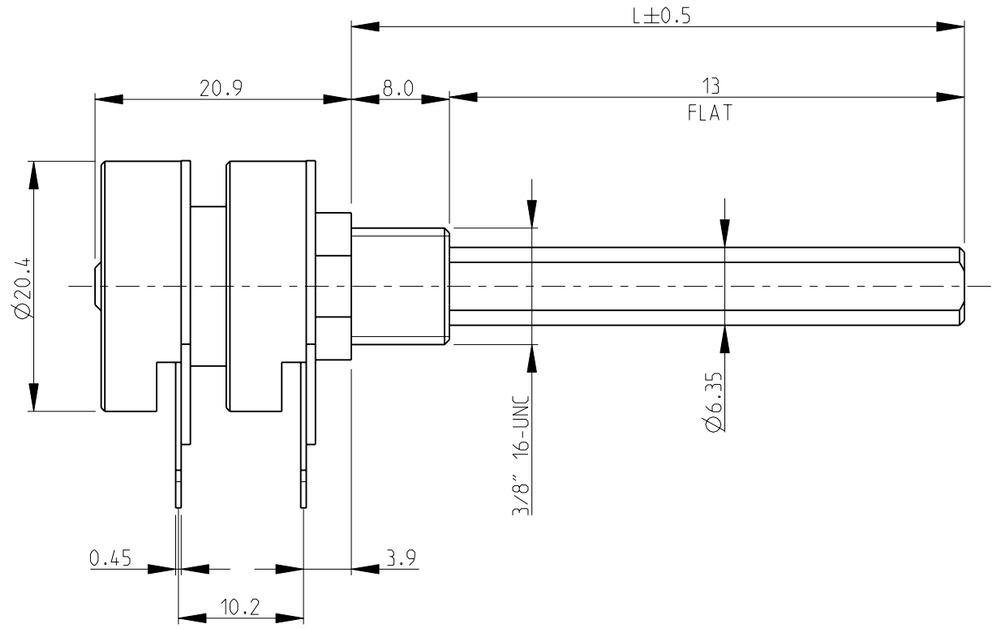

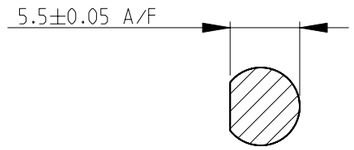

RoHS Compliant

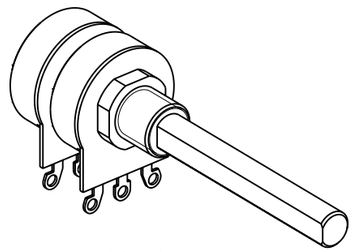

SCALE 1:1

THIS DRAWING IS A CONTROLLED DOCUMENT FOR TYCO ELECTRONICS CORPORATION IT IS SUBJECT TO CHANGE AND THE CONTROLLING ENGINEERING ORGANIZATION SHOULD BE CONTACTED FOR THE LATEST REVISION.

DIMENSIONS: mm

TOLERANCES UNLESS OTHERWISE SPECIFIED:

0 PLC	±0.5
1 PLC	±0.2
2 PLC	±0.1
3 PLC	±-
4 PLC	±-
ANGLES	±5°

MATERIAL –

FINISH –

DWN	SUBHASH.M	30-Jul-08
CHK	PRAKASH.S	30-Jul-08
APVD	STEPHEN.P	30-Jul-08

PRODUCT SPEC –

APPLICATION SPEC –

WEIGHT –

CUSTOMER DRAWING

Tyco Electronics

Tyco Electronics Corporation
Dorcan, Swindon, SN3 5HH

NAME SPINDLE OPERATED POTENTIOMETER SERIES 23 (DUAL GANG STYLE)

SIZE	CAGE CODE	DRAWING NO	RESTRICTED TO
A3	00779	C-1624177	–

SCALE	SHEET	OF	REV
2:1	1	1	BA

AMP 1470-19 REV 31MAR2000

Pro/ENGINEER DRAWING