THIS DRAWING IS UNPUBLISHED. RELEASED FOR PUBLICATION MAR ,1988.
© COPYRIGHT 1988 By – ALL RIGHTS RESERVED.

| LOC | DIST |
|---|---|
| J | |

REVISIONS 変更

| P | LTR | DESCRIPTION | DATE | DWN | APVD |
|---|---|---|---|---|---|
| | H | REVISED PER ECO-15-002179 | 02MAR2015 | AP | SB |

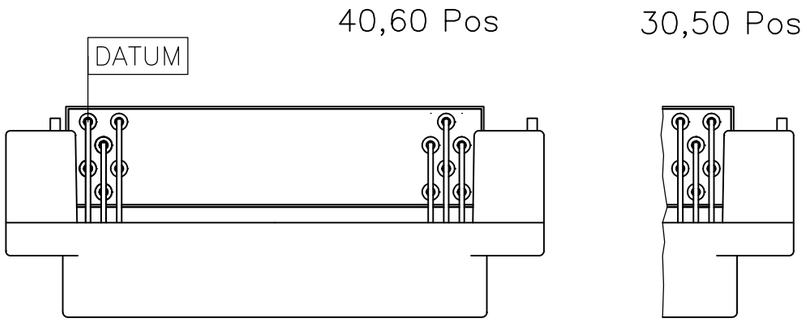


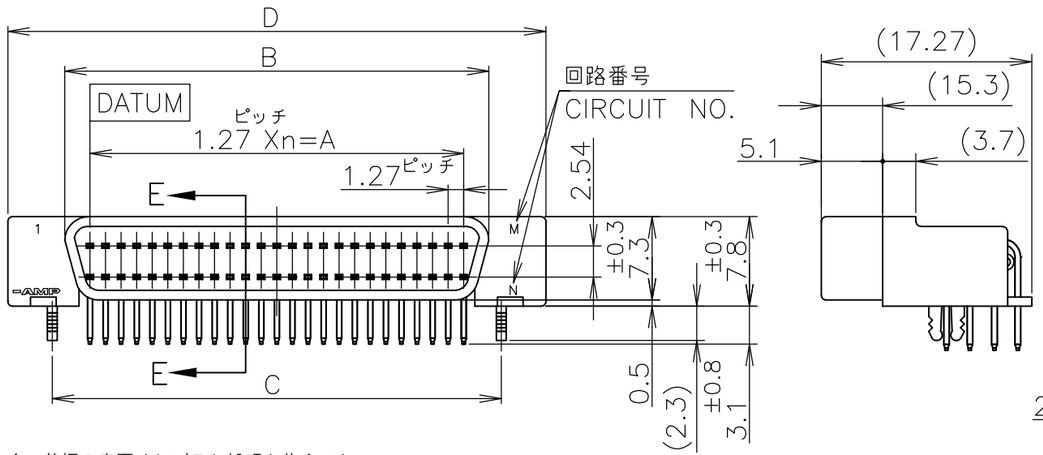


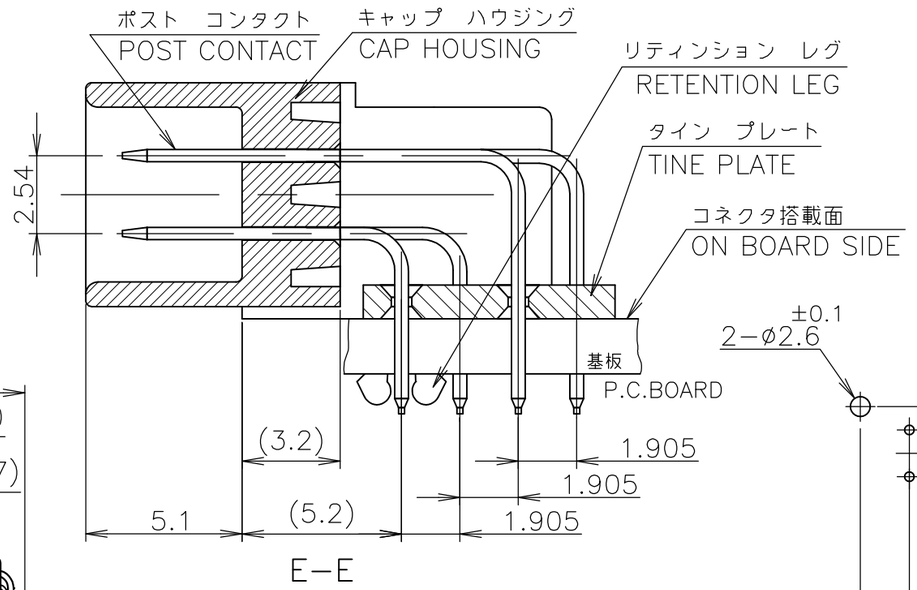


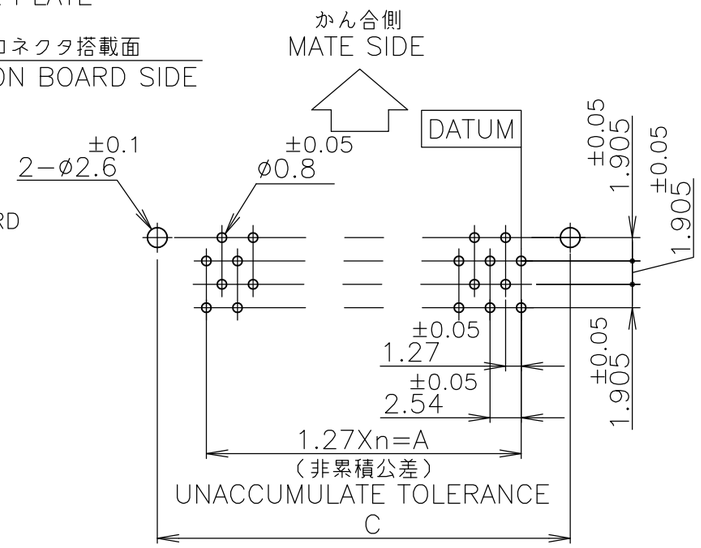


30,50 Pos
（コネクタ搭載面側）
ON BOARD SIDE

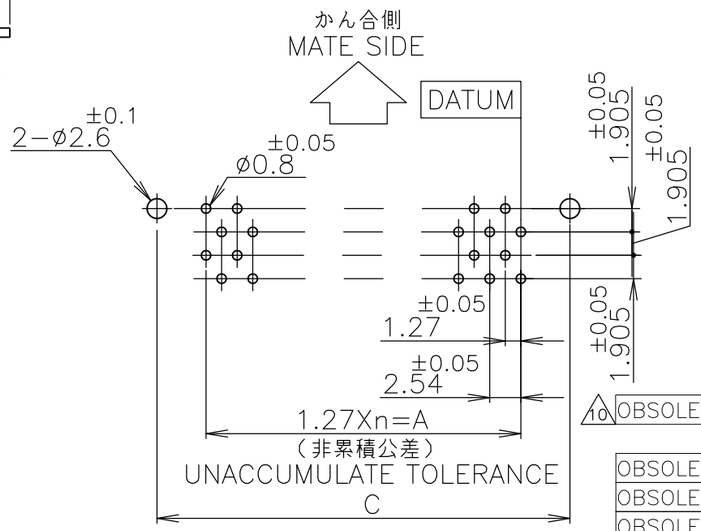


40,60 Pos
（コネクタ搭載面側）
ON BOARD SIDE

1 基板の表面はレジスト処理を施すこと。
2 基板の穴寸法は、コネクタ搭載面側から示す。
3 基板及びコネクタのn数は DATUM 位置から数える。
4 リテンションレグは半田付前の基板へのコネクター仮止を役目とする。
5 ハウジング材料：P.B.T樹脂（94V–0）,色：黒色
6 コンタクト材料：燐青銅
7 コンタクト表面仕上：1.27μ MIN厚の全面ニッケル下地めっき上に接触部分は0.76μ MIN. 又は0.2μ MIN厚の金めっき、半田付部分は1μ MIN厚のすずめっき
8 リテンションレグ表面仕上：1μ MIN厚の全面ニッケル下地めっき上に2μ MIN 厚のすずめっき
9 リテンションレグ材料：黄銅

1 USE A P.C.B. WHOSE ARE TREATED WITH SOLDER RESIST.
2 SHOW P.C.B LAYOUT FROM ON BOARD SURFACE SIDE.
3 NUMBER THE CONTACT IN THE P.C.B OR CONNECTOR CONSECUTIVEELY FROM "DATUM" SIDE.
4 THE RETENTION LEG IS A TEMPORARY FIX BEFORE SOLDERING
5 HOUSING MATERIAL : P.B.T(UL94V–0) / BLACK
6 CONTACT MATERIAL : PHO–BRONZE
7 CONTACT FINISH : NICKEL 0.00127 MIN THK. OVERALL SELECTIVE GOLD 0.00076 MIN OR 0.0002 MIN. THK ON CONTACT AREA AND TIN 0.001 MIN THK. ON TINE AREA.
8 RETENTION LEG FINISH:0.002 MIN TIN PL. OVER 0.001 MIN NICKEL PL.
9 RETENTION LEG MATERIAL:BRASS
10 OBSOLETE PARTS: OBSOLETE CIS STREAMLINING PER D.RENAUD/D.SINISI

| | | | | | | | | | |
|---|---|---|---|---|---|---|---|---|---|
| 10 OBSOLETE | Au PL. 0.00076 MIN. | 6–~~174218~~–4 | 60 | 29 | 36.83 | 42.80 | 44.23 | 48.14 |
| | | 6–~~174218~~–3 | 50 | 24 | 30.48 | 36.45 | 37.88 | 41.79 |
| OBSOLETE | | 6–~~174218~~–2 | 40 | 19 | 24.13 | 30.10 | 31.53 | 35.44 |
| OBSOLETE | | 6–~~174218~~–1 | 30 | 14 | 17.78 | 23.75 | 25.18 | 29.09 |
| OBSOLETE | Au PL. 0.0002 MIN. | ~~174218~~–4 | 60 | 29 | 36.83 | 42.80 | 44.23 | 48.14 |
| 10 OBSOLETE | | ~~174218~~–3 | 50 | 24 | 30.48 | 36.45 | 37.88 | 41.79 |
| OBSOLETE | | ~~174218~~–2 | 40 | 19 | 24.13 | 30.10 | 31.53 | 35.44 |
| OBSOLETE | | ~~174218~~–1 | 30 | 14 | 17.78 | 23.75 | 25.18 | 29.09 |
| | REMARK | PART NUMBER | POS | n | A | B | C | D |

鉛フリー
LEAD FREE

GENERAL TOLERANCE 一般公差
10≧：±0.2
30≧ ＞10：±0.25
100≧ ＞30：±0.3
ANGLES：±3°

THIS DRAWING IS A CONTROLLED DOCUMENT.

DIMENSIONS: 単位： 粍 mm

TOLERANCES UNLESS OTHERWISE SPECIFIED: 一般公差
0 PLC ±
1 PLC ±
2 PLC ±
3 PLC ±
4 PLC ±
ANGLES ±

MATERIAL 材料 SEE NOTE 5 6 9
FINISH 仕上 SEE NOTE 7 8

| | | |
|---|---|---|
| DWN | MIURA | 25MAR88 |
| CHK | Y.KASHIWA | 18OCT88 |
| APVD | R.NISHIMURA | 18OCT88 |
| PRODUCT SPEC 製品規格 | | |
| APPLICATION SPEC 取付適用規格 | | |
| WEIGHT | | |

TE Connectivity

NAME 名称: CAP ASS'Y (HORIZONTAL/W/LEG) AMPLIMITE 050 SERIES I B–TO–B CONN.

| SIZE | CAGE CODE | DRAWING NO 番号 | RESTRICTED TO |
|---|---|---|---|
| A3 | 00779 | C–174218 | |

CUSTOMER DRAWING | SCALE 尺度 2:1 | SHEET 1 OF 1 | REV H