THIS COPY IS PROVIDED ON A RESTRICTED BASIS AND IS NOT TO BE USED IN ANY WAY DETRIMENTAL TO THE INTERESTS OF PANDUIT CORP.

PANDUIT PART #	STUD SIZE	DIMENSIONS - in. [mm]				
		A ± .02 [0,5]	W ± .01 [0,3]	C ± .02 [0,5]	M ± .02 [0,5]	H ± .01 [0,3]
P14-6RHT6	#6	.62 [15,75]	.25 [6,35]	.20 [5,08]	.50 [12,70]	.15 [3,81]
P14-8RHT6	#8	.71 [18,03]	.31 [7,87]	.25 [6,35]	.55 [13,97]	.17 [4,32]
P14-10RHT6	#10	.71 [18,03]	.31 [7,87]	.25 [6,35]	.55 [13,97]	.20 [5,08]

UL TOOLS
CT-100A CT-200 CT-600-A (CT-570CH) CT-1570 CT-2500 (CT-2570CH)

PANDUIT APPROVED TOOLS
CT-160 CT-260

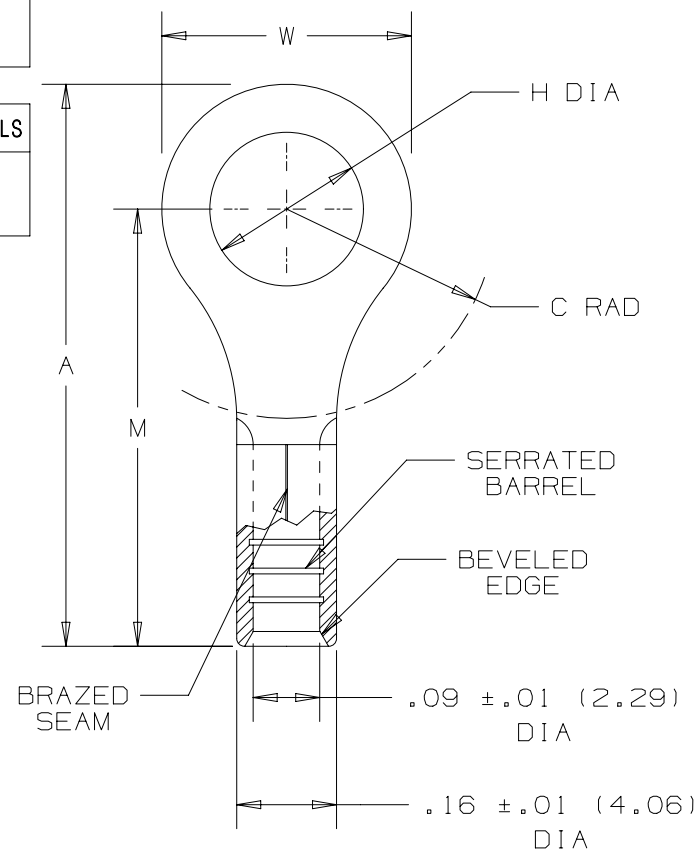

NOTES:

1. UL LISTED FOR:
   A. #18-14 AWG SOLID OR STRANDED COPPER WIRE
   B. 650°F [343°C] MAX TEMP RATING
   C. 2000 VOLTS MAX

2. SEE www.panduit.com FOR PACKAGE QUANTITIES

3. MATERIAL:
   A. STAMPING - .03" [0,8] THK COPPER, NICKEL PLATED

4. DIMENSIONS IN BRACKETS ARE IN MILLIMETERS

5. WIRE STRIP LENGTH: 9/32" $^{+1/32}_{-0}$ [7,1mm $^{+0,8}_{-0}$]

c UL us
LISTED
587H
E52164

REV	DATE	BY	CHK	APR	DESCRIPTION	ECN
07	5/17	JHNU	TMR	RGB	UPDATED TOOL CHART FORMAT	N41266BA-A41266
06	06/14	MBY	JHNU	RGB	ADDED cULus LOGO, REVISED NOTES, MOVED TOOLS TO TABLE, UPDATED BORDER	N41266BA-A41266

TITLE
#18-14 BARREL NON-INSULATED RING TONGUE, HIGH TEMPERATURE, 650° F

CUSTOMER DRAWING

ITEM REVISION NAME: N41266BA/07

DATASET FILE NAME: N41266BA/07

PANDUIT

UNLESS OTHERWISE SPECIFIED, DIMENSIONAL TOLERANCES ARE: IN [mm]
.X ± .XXX ±
.XX ± ANGLES ±
THIRD ANGLE PROJECTION

MATERIAL: SEE NOTE 3

DRAWING NUMBER: A41266

DRAWN BY	DATE	CHK	SCALE	SHT 1 OF 1	SIZE
DAW			NONE		A

D10100DA/16