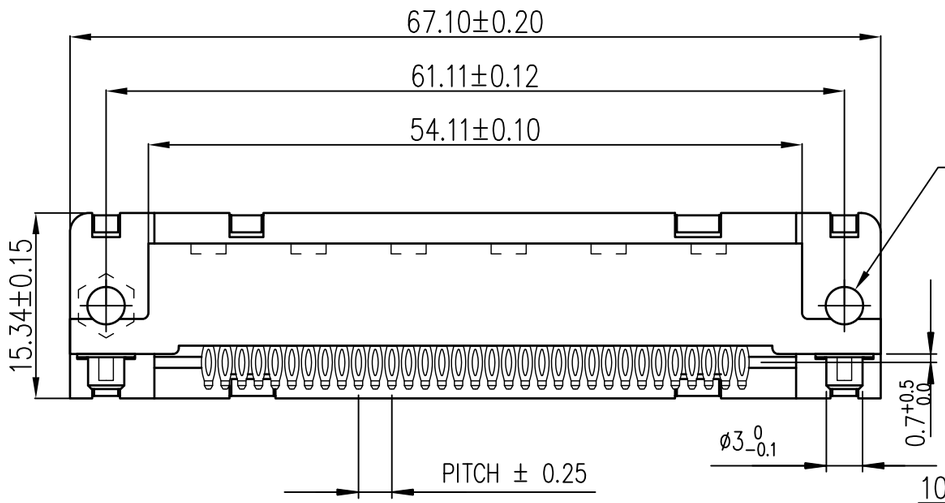


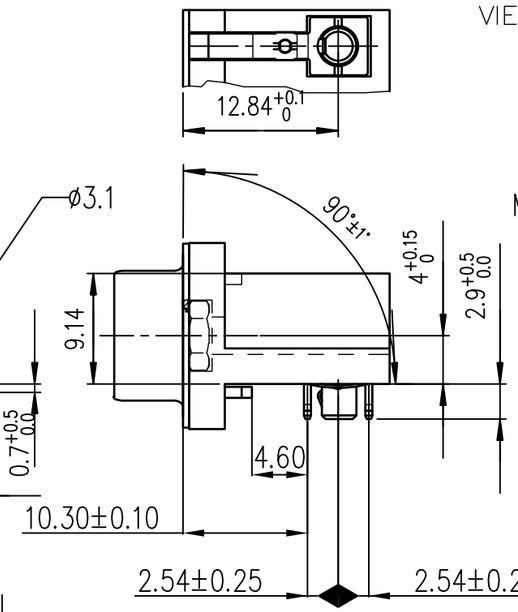


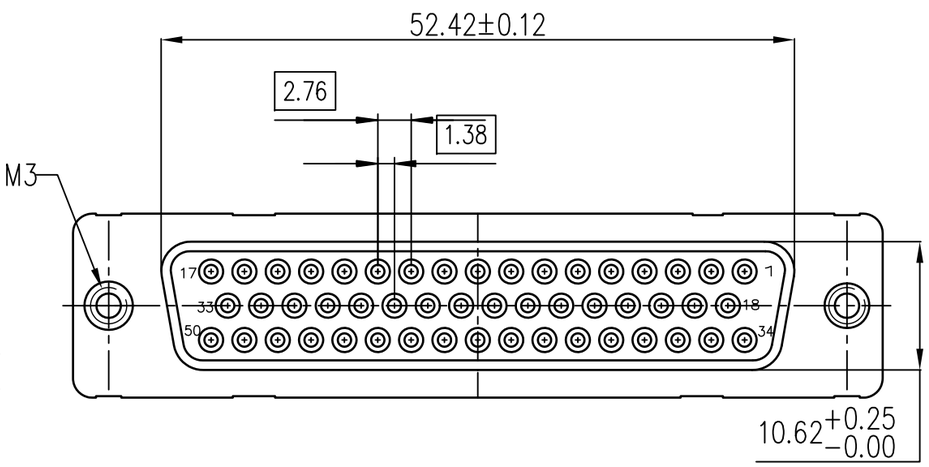


PC card drilling dimensions(after plating) scale: 1.5

(thickness 1.60 ±0.10mm)

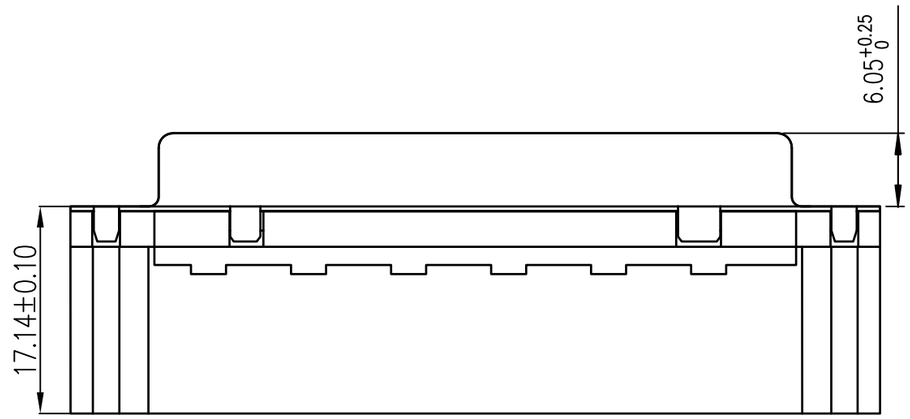


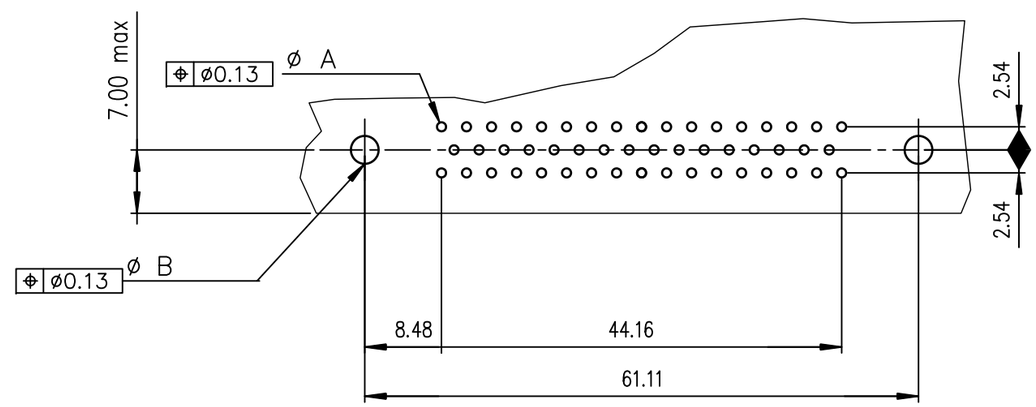


TIN LEAD PART NUMBER

| | |
|---|---|
| D50S82C4GL00 | D50S82C6GL00 |
| Gold flash | 0,76 µ gold |

LEAD FREE PART NUMBER

| | |
|---|---|
| D50S82C4GL00LF | D50S82C6GL00LF |
| Gold flash | 0,76 µ gold |

GENERAL CHARACTERISTICS AND ROHS INFORMATIONS:

SEE DRAWING C01-8646-0001

| | | | | | | | |
|---|---|---|---|---|---|---|---|
| mat'l. code – | | | | surface ISO 1302 | tolerance ISO 406 ISO 1101 | projection | product family D-SUB |
| ltr | ecn no | dr | date | tolerances unless otherwise specified | | | title |
| M | ELX-I-17675 | MP | 2014/05/13 | angles 0°±2° | linear .0±.0.1 / .00±0.1 / .000±0.1 | MM scale 2:1 | DELTA-D EUROSTYLE FEMALE 50 RIGHT ANGLED PRESS FIT |
| | | | | dr | MITHUN PAUL 2014/05/13 | | dwg no C01-8646-0251 |
| | | | | engr | MITHUN PAUL 2014/05/13 | | sheet 1 of 1 |
| | | | | chr | ALIAS BABU 2014/05/13 | | size A3 |
| | | | | appd | BIJU K PAUL 2014/05/13 | | type Product Customer Drawing |
| sheet index | revision | M | | | | | |
| | sheet | 1 | | | | | |

FCIconnect.com
Copyright FCI