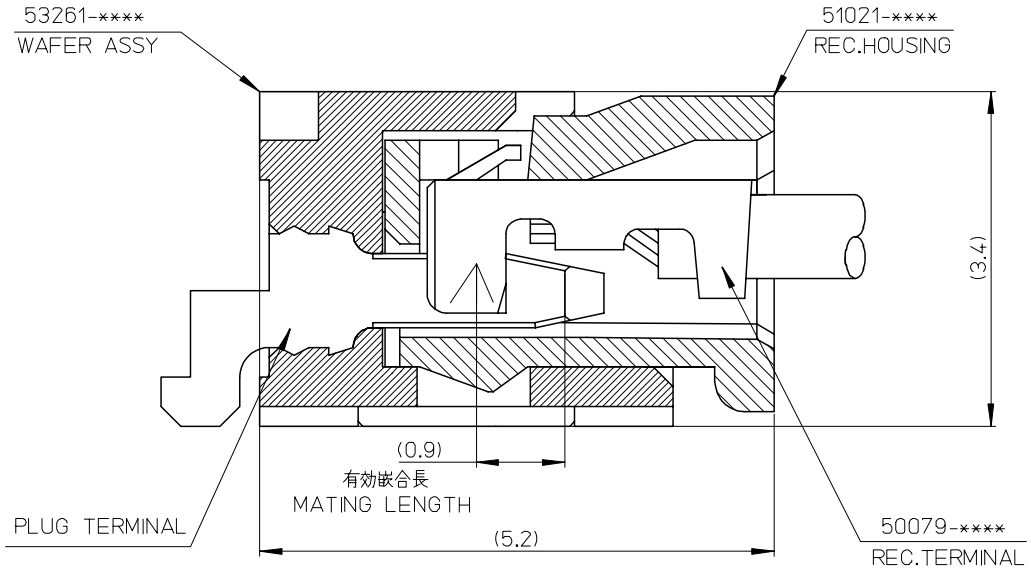

MODEL NO./MATERIAL NO.		
53261-****	WAFER ASSY	
50079-****	TERMINAL	REC.
51021-****	HOUSING	

RELEASED	EC NO: J2006-2426	2006/02/02
	DRWN:YAOYAGI	2006/02/03
	CHKD:YMAEDA	2006/02/07
	APPR:NUKITA	
DESCRIPTION		
REV	0	

GENERAL TOLERANCES (UNLESS SPECIFIED)

10 UNDER	±---
10 OVER 30 UNDER	±---
30 OVER	±---
ANGULAR	±--- °

DRAFT WHERE APPLICABLE MUST REMAIN WITHIN DIMENSIONS

DIMENSION STYLE: MM ONLY	SCALE: ---	DESIGN UNITS: METRIC	THIRD ANGLE PROJECTION
DRAWN BY: Y.AOYAGI	DATE: 2006/01/30	TITLE: 1.25 W-TO-B CONN. 51021,53261 MATING CROSS SECTION	
CHECKED BY: Y.MAEDA	DATE: 2006/01/30		
APPROVED BY: N.UKITA	DATE: 2006/01/30	molex MOLEX INCORPORATED	
MATERIAL NO.: SEE CHART		DOCUMENT NO.: SD-51021-002	SHEET NO.: 1 OF 1
SIZE: A3			

THIS DRAWING CONTAINS INFORMATION THAT IS PROPRIETARY TO MOLEX INCORPORATED AND SHOULD NOT BE USED WITHOUT WRITTEN PERMISSION

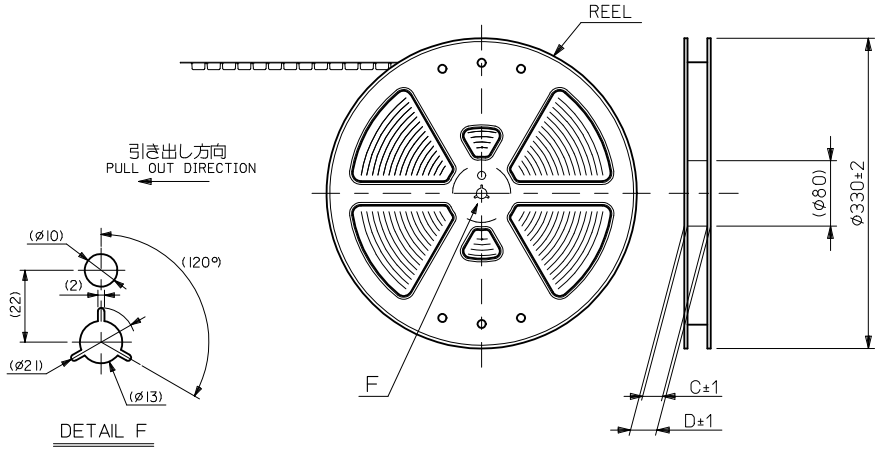

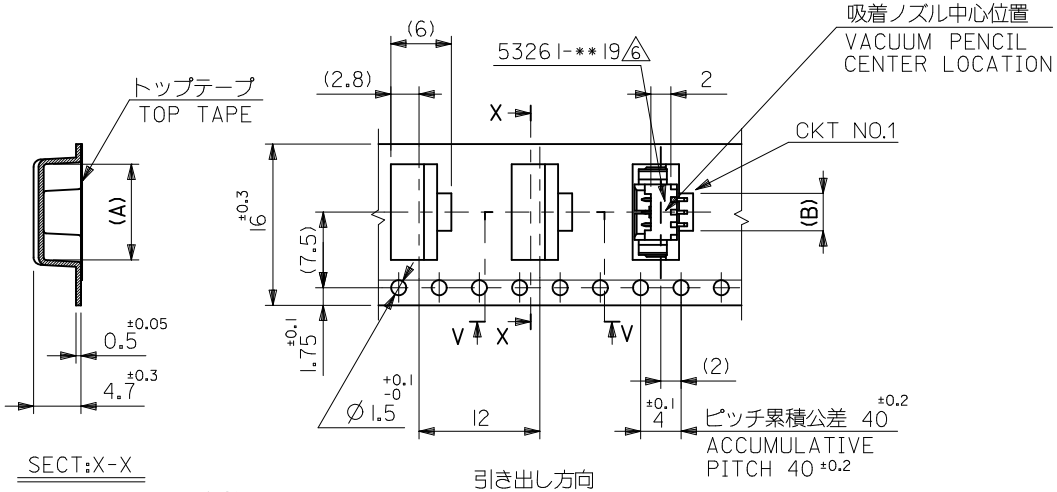

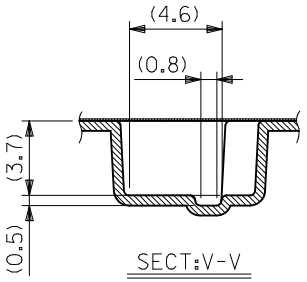

16mm幅キャリアテープ

16mm WIDTH CARRIER TAPE

注記
NOTES

1. 53261-**19 の詳細寸法については図面 SD-53261-024 を参照下さい。
   RE DETAILED DIMENSIONS,SEE SD-53261-024
2. 梱包数量：1000個／リール
   NUMBER OF CONNECTOR:1000PCS/REEL
3. リードテープ長さ LEAD TAPE LENGTH

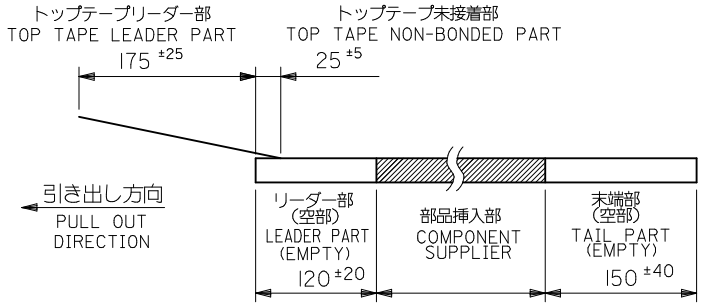

4. 材料 (MATERIAL)
   キャリアテープ(CARRIER TAPE):ポリプロピレン(POLYPROPYLENE)
   トップテープ (TOP TAPE): PET ,PE ,PEF
   リール (REEL):ポリスチレン（PS）<リサイクル材含む>
   POLYSTYREN(PS) <RECYCLE MATERIAL CONTAINED>

△5 コネクタ、ハウジング平面部
   CONNECTOR, HOUSING FLAT AREA

6. 本製品は 53261-**90 の鉛フリー品である。
   THIS PRODUCT IS LEAD FREE OF 53261-**90
7. ELV及びRoHS適合品
   ELV AND RoHS COMPLIANT
8. 本製品は乾燥剤入り、ハイバリア梱包仕様である.
   THIS PRODUCT IS HIGH BARRIER PACKAGE WITH DESICCANT.

キャリアテープ幅 CARRIER TAPE WIDTH	D	C	B	A	EMBOSSED TAPE PACKAGE オーダー番号 ORDER NO.	極数 CKT.
16	21.4	17.4	3.7	9.5	53261-0371	3
			2.45	8.25	53261-0271	2

MODEL NO. 53261-**71

REVISED
EC NO:
DRWN:YGOTO
CH'KD:KASAKAWA
APPR:
2010/02/17
REV D

DESCRIPTION

GENERAL TOLERANCES (UNLESS SPECIFIED)

10 UNDER	±0.2
10 OVER 30 UNDER	±0.25
30 OVER	±0.3
ANGULAR ±3 °	

DRAFT WHERE APPLICABLE MUST REMAIN WITHIN DIMENSIONS

DIMENSION STYLE: MM ONLY
SCALE: ---
DESIGN UNITS: METRIC
THIRD ANGLE PROJECTION

DRAWN BY: H.SHIMABUKUR DATE: '04/02/06
CHECKED BY: K.TOJO DATE: '04/02/06
APPROVED BY: NUKITA DATE: 2010/02/18

TITLE: 1.25 W/B CONN WAFER ASSY FOR SMT EMBSTP PKG

molex MOLEX INCORPORATED

MATERIAL NO.: SEE TABLE & SHEET 2,3
DOCUMENT NO.: SD-53261-023
SHEET NO.: 1 OF 3
SIZE: A3

THIS DRAWING CONTAINS INFORMATION THAT IS PROPRIETARY TO MOLEX INCORPORATED AND SHOULD NOT BE USED WITHOUT WRITTEN PERMISSION

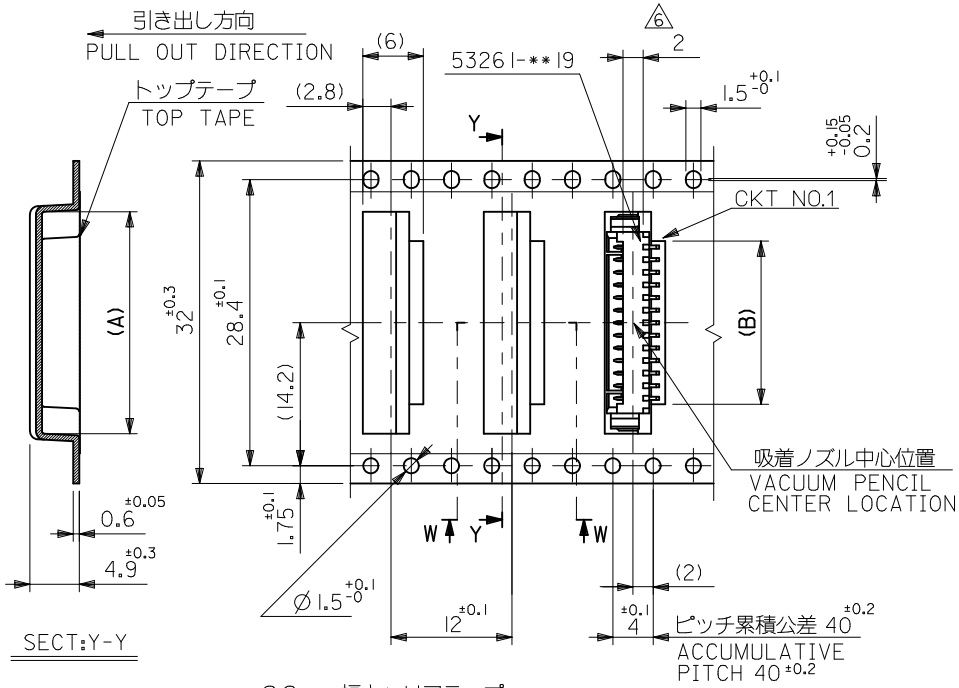

32mm幅キャリアテープ
32mm WIDTH CARRIER TAPE

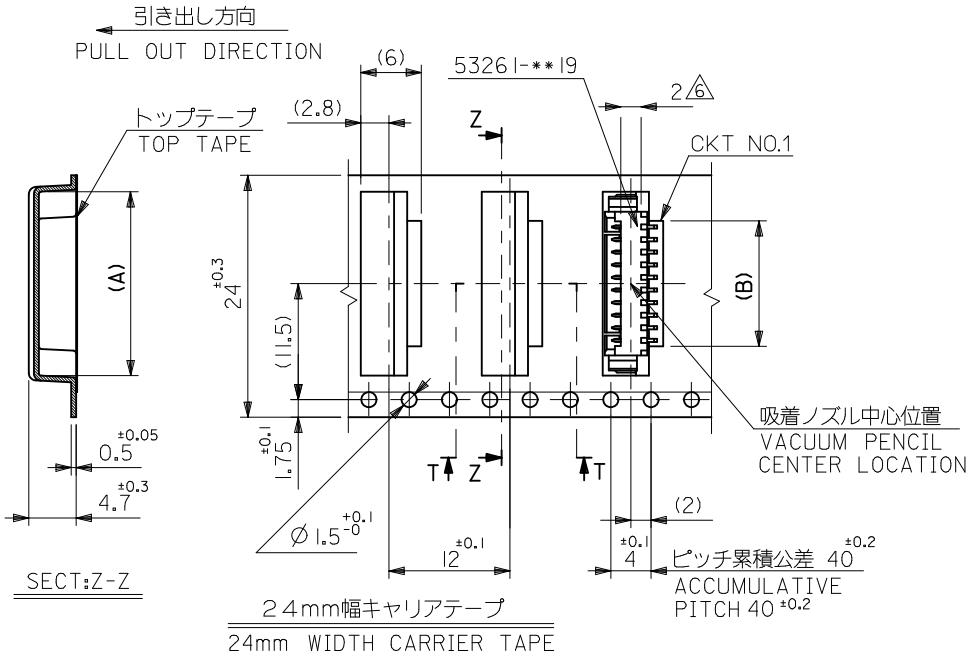

24mm幅キャリアテープ
24mm WIDTH CARRIER TAPE

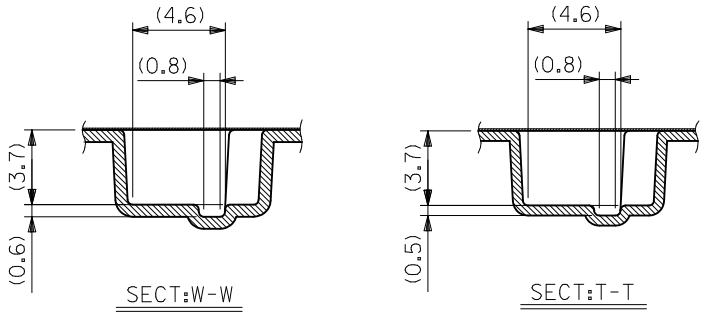

キャリアテープ幅 CARRIER TAPE WIDTH	D	C	B	A	EMBOSSED TAPE PACKAGE オーダー番号 ORDER NO.	極数 CKT.
32	37.4	33.4	16.2	22	53261-1371	13
			14.95	20.75	-1271	12
			13.7	19.5	-1171	11
24	29.4	25.4	12.45	18.25	-1071	10
			11.2	17	-0971	9
			9.95	15.75	-0871	8
			8.7	14.5	-0771	7
			7.45	13.25	-0671	6
			6.2	12	-0571	5
			4.95	10.75	53261-0471	4

MODEL NO. 53261-**71

REVISED
EC NO:
DRWN:YGOTO
CH'KD:KASAKAWA
APPR:
2010/02/17
REV D
DESCRIPTION

GENERAL TOLERANCES (UNLESS SPECIFIED)

10 UNDER	±0.2
10 OVER 30 UNDER	±0.25
30 OVER	±0.3
ANGULAR ±3 °	

DRAFT WHERE APPLICABLE MUST REMAIN WITHIN DIMENSIONS

DIMENSION STYLE: MM ONLY
SCALE: ---
DESIGN UNITS: METRIC
THIRD ANGLE PROJECTION

DRAWN BY: H.SHIMABUKUR DATE: '04/02/06
CHECKED BY: K.TOJO DATE: '04/02/06
APPROVED BY: NUKITA DATE: 2010/02/18

TITLE: 1.25 W/B CONN WAFER ASSY FOR SMT EMBSTP PKG

molex MOLEX INCORPORATED

MATERIAL NO.: SEE TABLE & SHEET 1,3
DOCUMENT NO.: SD-53261-023
SHEET NO.: 2 OF 3
SIZE: A3

THIS DRAWING CONTAINS INFORMATION THAT IS PROPRIETARY TO MOLEX INCORPORATED AND SHOULD NOT BE USED WITHOUT WRITTEN PERMISSION

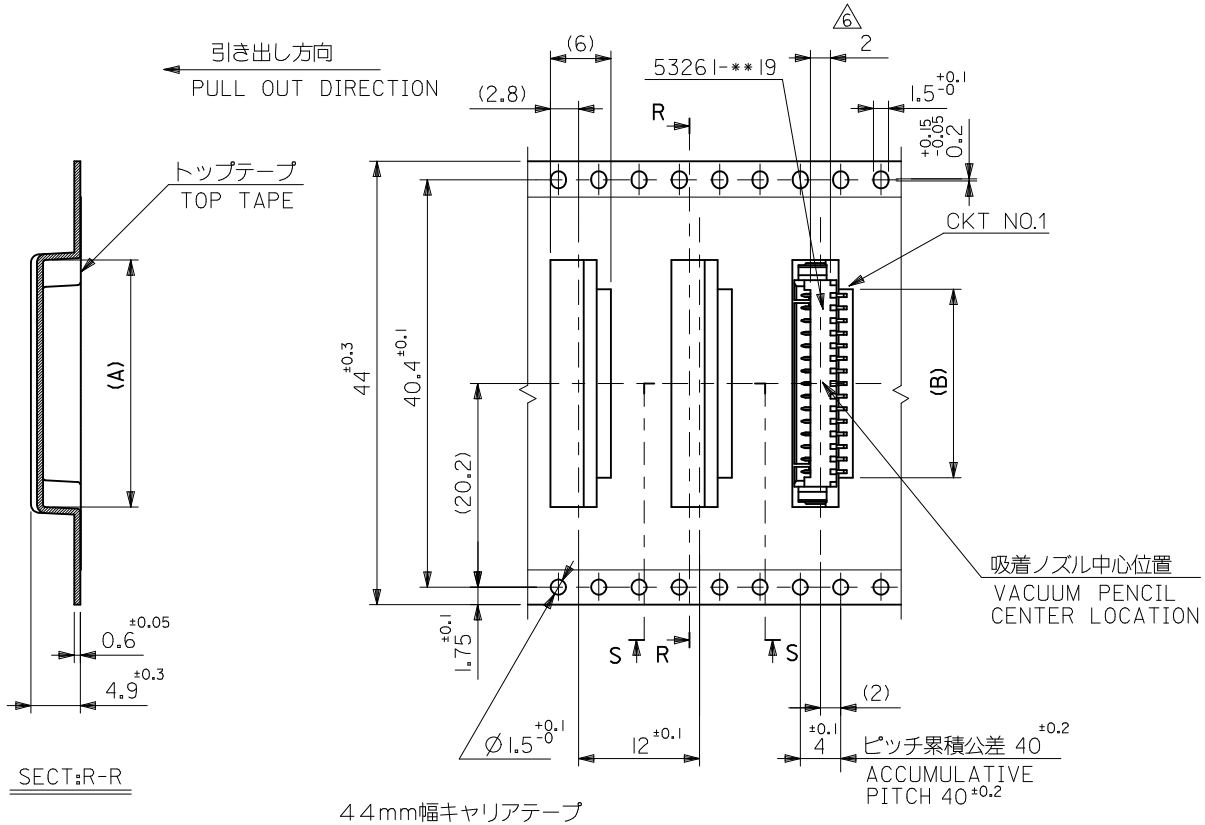

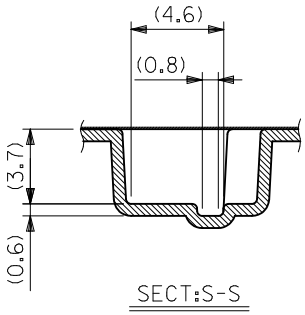

キャリアテープ幅 CARRIER TAPE WIDTH	D	C	B	A	EMBOSSED TAPE PACKAGE オーダー番号 ORDER NO.	極数 CKT.
44	49.4	45.4	18.7	24.5	53261-1571	15
			17.45	23.25	53261-1471	14

MODEL NO. 53261-**71

REVISED
EC NO: 2010/02/17
DRWN:YGOTO
CH'KD:KASAKAWA
APPR:
REV D

DESCRIPTION

GENERAL TOLERANCES (UNLESS SPECIFIED)

10 UNDER	±0.2
10 OVER 30 UNDER	±0.25
30 OVER	±0.3
ANGULAR ±3 °	

DRAFT WHERE APPLICABLE MUST REMAIN WITHIN DIMENSIONS

DIMENSION STYLE: MM ONLY
SCALE: ---
DESIGN UNITS: METRIC
THIRD ANGLE PROJECTION

DRAWN BY: H.SHIMABUKUR DATE: '04/02/06
CHECKED BY: K.TOJO DATE: '04/02/06
APPROVED BY: NUKITA DATE: 2010/02/18

TITLE: 1.25 W/B CONN WAFER ASSY FOR SMT EMBSTP PKG

molex MOLEX INCORPORATED

MATERIAL NO.: SEE TABLE & SHEET 1,2
DOCUMENT NO.: SD-53261-023
SHEET NO.: 3 OF 3
SIZE: A3

THIS DRAWING CONTAINS INFORMATION THAT IS PROPRIETARY TO MOLEX INCORPORATED AND SHOULD NOT BE USED WITHOUT WRITTEN PERMISSION

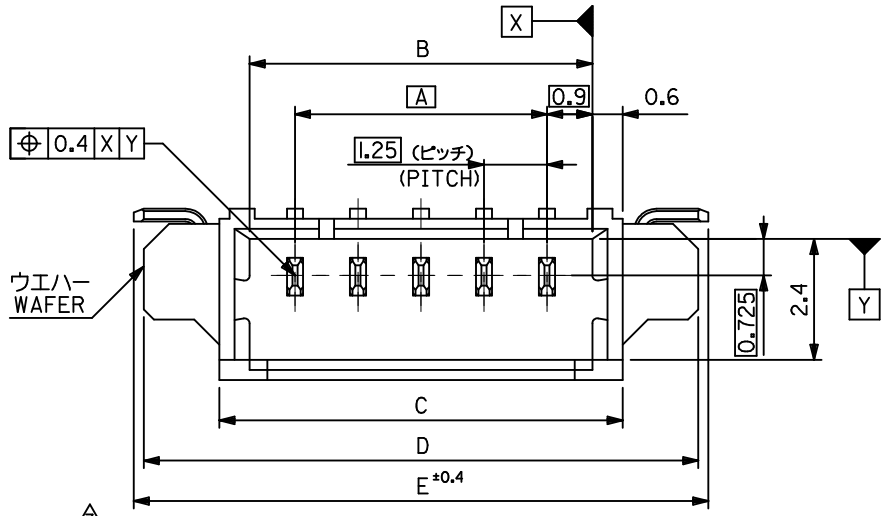

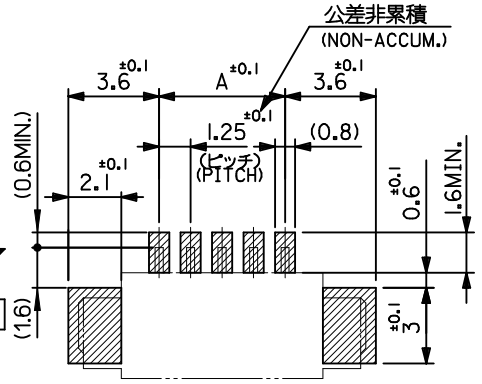

参考基板レイアウト
RECOMMENDED P.C.BOARD PATTERN DIM.(REF.)
(SCALE 5:1)

注記 NOTES

1. 嵌合相手： 5102シリーズ
   MATES WITH: 5102 SERIES
2. 材質 MATERIAL
   ウエハー ：NYLON46, UL94V-0
   ピン ：リン青銅
   PIN ：PHOS-BRO
   ：錫メッキ 1.0マイクロメートル以上
   ：TIN 1.0 MICROMETER MINIMUM
   ：ニッケル下地 1.0マイクロメートル以上
   ：NICKEL(UNDER PLATING)1.0 MICROMETER MINIMUM
   金具 ：リン青銅
   FITTING NAIL ：PHOS-BRO
   ：錫メッキ 1.0マイクロメートル以上
   ：TIN 1.0 MICROMETER MINIMUM
   ：ニッケル下地 1.0マイクロメートル以上
   ：NICKEL(UNDER PLATING)1.0 MICROMETER MINIMUM
3. ロック窓は2、3極は1箇所、4極以上は2箇所とする。
   LOCKING WINDOW ：
   ONE PLACE FOR 2 AND 3 CKT. AND
   TWO PLACES FOR MORE THAN 3 CKT.
4. ソルダーテール部のズレ量及び金具（補強板）のズレ量は基準面 W に対し、上方向 0.05 MAX.、下方向に0.1 MAX.とする。 W
   OFFSET BETWEEN BASIS PLANE TO SOLDER TAIL BOTTOM AND FITTING NAIL BOTTOM ：
   UPPER SIDE ：0.05MAX.
   LOWER SIDE ：0.1MAX.
5. 本製品は 53261-**10 の鉛フリー品である。
   THIS PRODUCT IS LEAD FREE OF 53261-**10
6. ELV及びRoHS適合品
   ELV AND RoHS COMPLIANT.

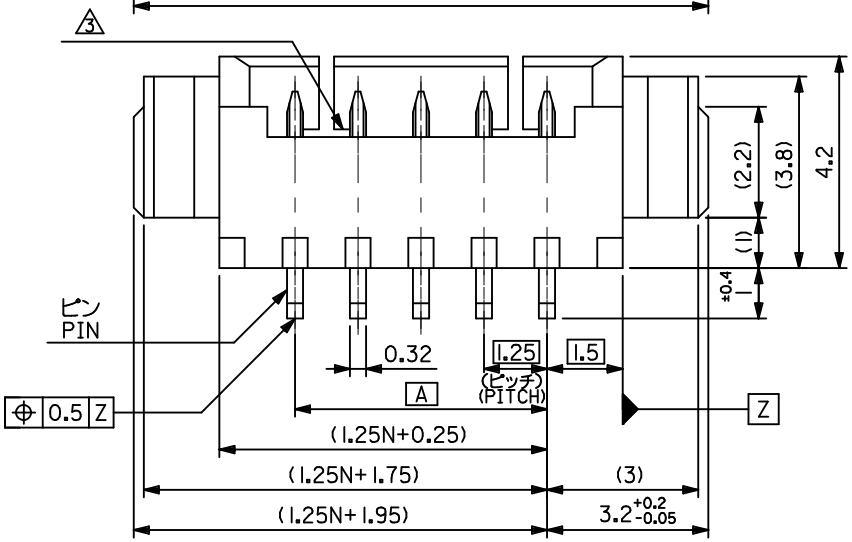

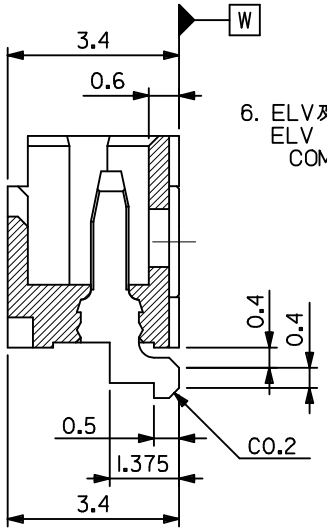

[断面図]
[CROSS SECTION]

MODEL NO.	E	D	C	B	A	MATERIAL. NO.	極数 CKT.
26.4	26	23	21.8	20	53261-1719		17
23.9	23.5	20.5	19.3	17.5	-1519		15
22.65	22.25	19.25	18.05	16.25	-1419		14
21.4	21	18	16.8	15	-1319		13
20.15	19.75	16.75	15.55	13.75	-1219		12
18.9	18.5	15.5	14.3	12.5	-1119		11
17.65	17.25	14.25	13.05	11.25	-1019		10
16.4	16	13	11.8	10	-0919		9
15.15	14.75	11.75	10.55	8.75	-0819		8
13.9	13.5	10.5	9.3	7.5	-0719		7
12.65	12.25	9.25	8.05	6.25	-0619		6
11.4	11	8	6.8	5	-0519		5
10.15	9.75	6.75	5.55	3.75	-0419		4
8.9	8.5	5.5	4.3	2.5	-0319		3
53261-**19	7.65	7.25	4.25	3.05	1.25	53261-0219	2

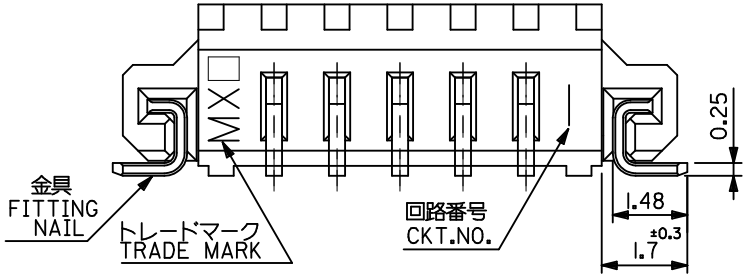

REVISED
EC NO: J2012-1315
DRWN:NITO 2012/04/16
CHKD:KASAKAWA 2012/04/16
APPR:YOITO 2012/04/26
DESCRIPTION
REV G

GENERAL TOLERANCES (UNLESS SPECIFIED)

10 UNDER	±0.2
10 OVER 30 UNDER	±0.25
30 OVER	±0.3
ANGULAR ±3 °	

DRAFT WHERE APPLICABLE MUST REMAIN WITHIN DIMENSIONS

DIMENSION STYLE: MM ONLY
SCALE: 10:1
DESIGN UNITS: METRIC
THIRD ANGLE PROJECTION

DRAWN BY: HSHIMABU DATE: 04/02/06
CHECKED BY: KTOJO DATE: 04/02/06
APPROVED BY: MSASAO DATE: 04/02/06

TITLE: 1.25 WIRE TO BOARD WAFER ASS FOR SMT

molex

MATERIAL NO.: SEE DRAWING
DOCUMENT NO.: SD-53261-024
SHEET NO.: 1 OF 1
SIZE: A3

THIS DRAWING CONTAINS INFORMATION THAT IS PROPRIETARY TO MOLEX INCORPORATED AND SHOULD NOT BE USED WITHOUT WRITTEN PERMISSION

SD-53261024.SD1