SHEET 1 OF 1

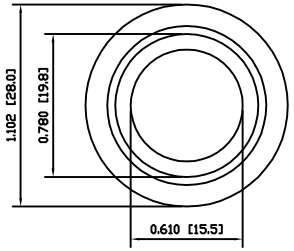


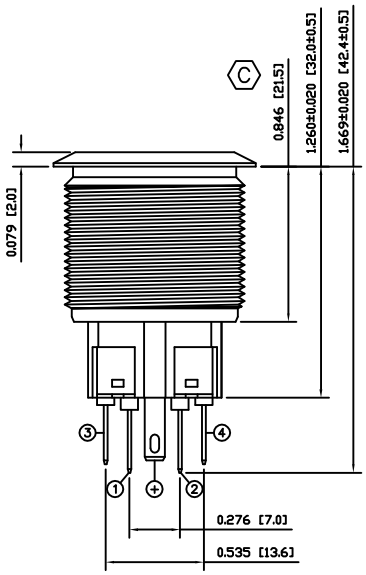


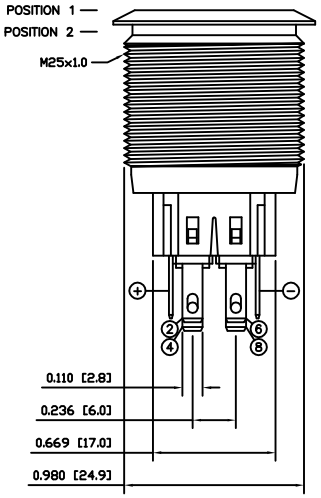


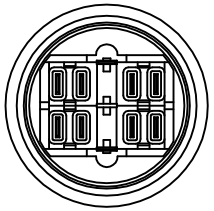

SUGGESTED PANEL CUTOUT

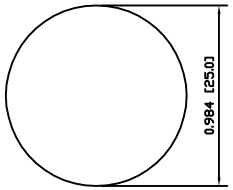


MAXIMUM PANEL THICKNESS: 0.551 [14.0mm]

SCHEMATIC

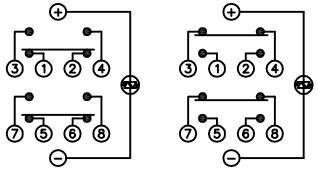

POSITION 1 (MAINTAINED) POSITION 2 (MAINTAINED)

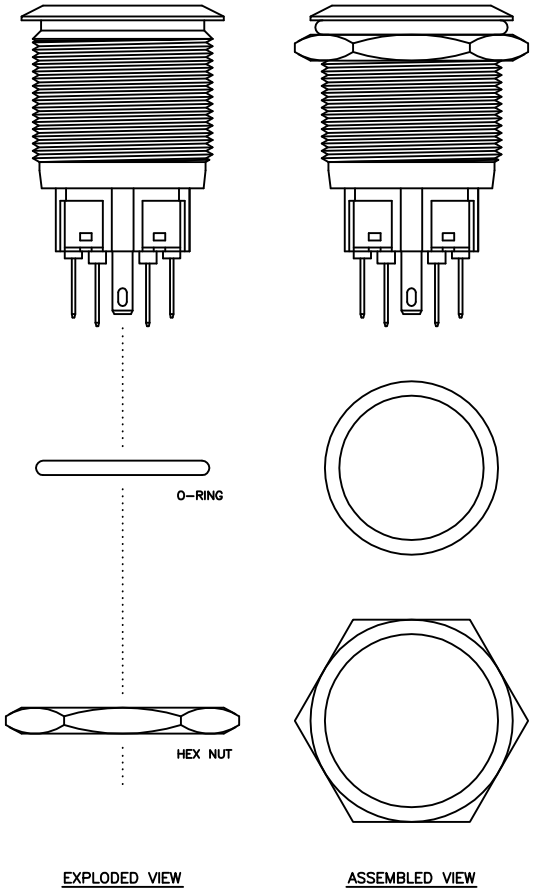


EXPLODED VIEW ASSEMBLED VIEW

## SPECIFICATIONS

FUNCTION:
2PNO OFF-ON + 2PNC ON-OFF

RATING:
2A 48VDC

ILLUMINATION VOLTAGE:
2.8V 20mA

CONTACT RESISTANCE:
Initial: 50mΩ Max. at 1A 12VDC

INSULATION RESISTANCE:
1,000MΩ Min. at 500VDC

DIELECTRIC STRENGTH:
2,000VAC Min. for 1 Minute

ELECTRICAL LIFE:
50,000 Cycles

MECHANICAL LIFE:
1,000,000 Cycles

TEMPERATURE:
Operating: -20°C to 70°C

INGRESS PROTECTION:
IP65

APPROVALS:
RoHS COMPLIANT

## MATERIALS

BUSHING:
Stainless Steel (304)

BASE:
Polyamide 6/6 (PA66)

ACTUATOR:
Stainless Steel (304)
Polycarbonate (PC)

HARDWARE:
Nickel Plated Brass (H59)

SEALING:
Silicone Rubber

INNER ASSEMBLY:
Polyamide 6/6 (PA66)
Polycarbonate (PC)
Polyoxymethylene (POM)
Brass (H59)
Stainless Steel
Beryllium Copper

SPRING:
Stainless Steel

CONTACTS:
Silver/Cadmium Oxide (AgCdO)

TERMINALS:
Brass

O-RING:
Silicone Rubber

## COLORS AND FINISH

BEZEL:
Stainless Steel
Machine Finish

ACTUATOR:
Stainless Steel
Machine Finish

ILLUMINATION:
Blue (Forward)
Blue (Reverse)

MARKING:
None

| REFERANCE | REV. | DATE | BY |
|---|---|---|---|
| BODY | B | 11/2/11 | CAB |
| COLORS | A | 09/07/08 | CAB |
| MATERIALS | A | 09/07/08 | CAB |
| SPECIFICATIONS | A | 09/07/08 | CAB |

THE INFORMATION CONTAINED IN THIS DOCUMENT IS PROPRIETARY TO E-SWITCH AND IS NOT TO BE COPIED OR TRANSFERRED

| REV. | DESCRIPTION | PCR | DATE | DRAWN BY |
|---|---|---|---|---|
| C | CORRECTED DIMENSION WAS 23.3MM | 20253 | 11/02/11 | BGL |
| B | CORRECTED MAXIMUM PANEL DEPTH | 19028 | 10/04/26 | CAB |
| A | INITIAL RELEASE | PCR00051 | 09/08/05 | CAB |

DIMENSIONS: INCHES [MILLIMETERS]
GENERAL TOLERANCES: ±0.008 [±0.2] / ±1°
SCALE: DRAWING NOT TO SCALE
PROJECTION:

E-SWITCH® LAMB INDUSTRIES

TITLE: PV8F2U0SS-341

| ITEM NUMBER | DATE | REVISION |
|---|---|---|
| 52-PV8F2U0SS341 | APRIL 26, 2010 | C |