RoHS compliant

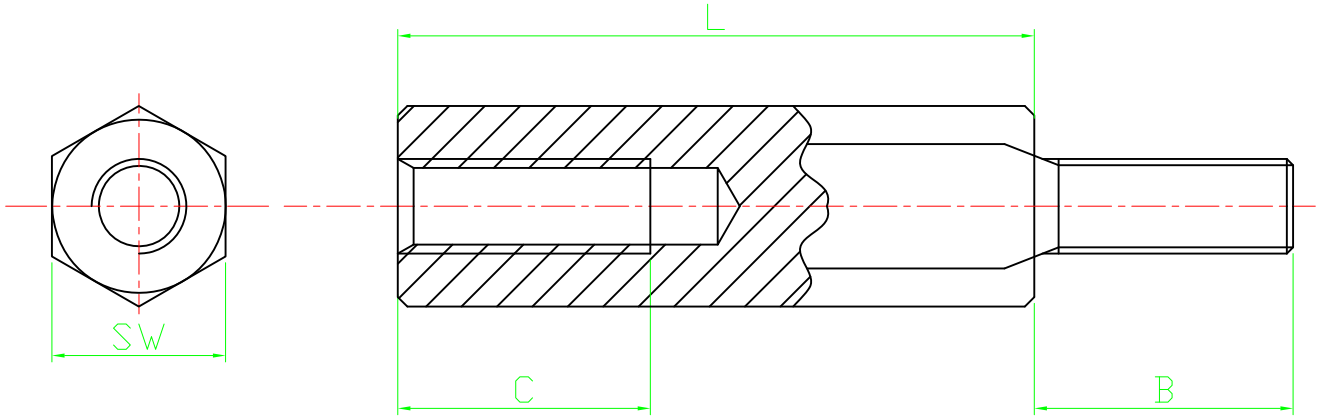

Width across flat(SW)5.5
Thread M3
PU=100 pcs

Option	Dimensions		
	L	B	C min
A	5	8	2.5
B	8	8	5
C	10	8	6
D	12	8	8
E	15	8	8
F	18	8	8
G	20	8	8
H	25	8	8
K	30	8	8
L	35	8	8
M	40	8	8

Scale	1:1						Date	Name
TOLERANCE						Drawn	20.08.2009	Dean
X.	±X							
X.X	±X					Approved	10.03.2010	Andy
X.XX	±X							
DIM	TOL	②	Modify drawing layout	10.03.2010	Dean			
X.°	±X°							
X.X°	±X°	①	Drawn	20.08.2009	Dean			
Angle	TOL	Id.	Modification	Date	Name			

ASSMANN WSW components

Customer-No.

ASSMANN WSW-No. V6621x

Drawing-No. ASS 0912 HS

rev02

Replace

Sheet