ENG NO. SD-5268-NA

EDP NO. 22-05-7**5

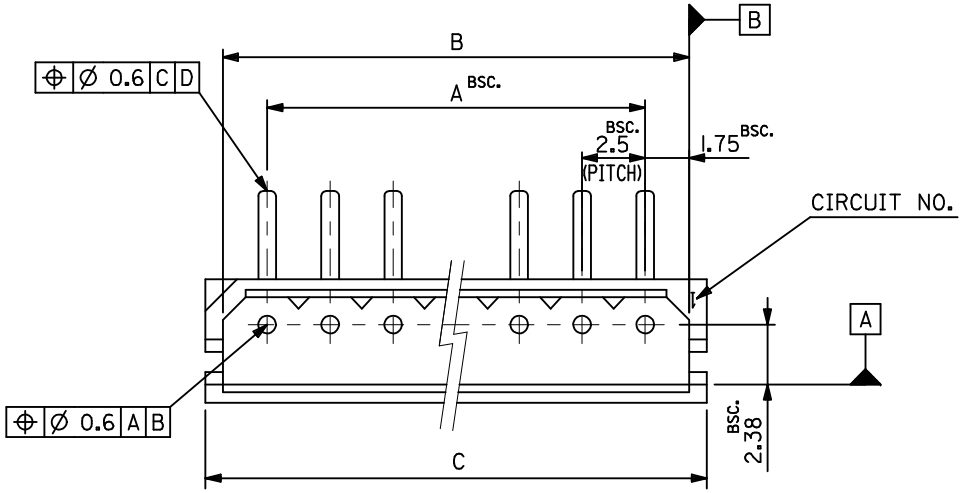

NOTE:
1.MATES WITH : 5264 SERIES.

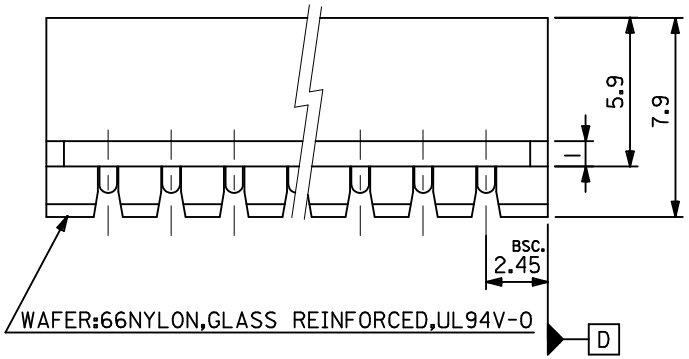

WAFER:66NYLON,GLASS REINFORCED,UL94V-0

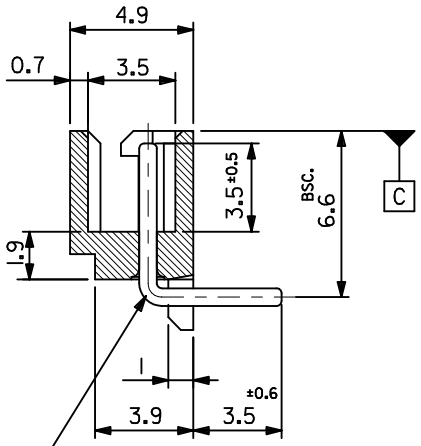

PIN:(Ø0.7)
BRASS,TIN OVER
COPPER PLATING

39.9	38.5	35	-7155	-15A	15
37.4	36	32.5	-7145	-14A	14
34.9	33.5	30	-7135	-13A	13
32.4	31	27.5	-7125	-12A	12
29.9	28.5	25	-7115	-11A	11
27.4	26	22.5	-7105	-10A	10
24.9	23.5	20	-7095	-09A	9
22.4	21	17.5	-7085	-08A	8
19.9	18.5	15	-7075	-07A	7
17.4	16	12.5	-7065	-06A	6
14.9	13.5	10	-7055	-05A	5
12.4	11	7.5	-7045	-04A	4
9.9	8.5	5	-7035	-03A	3
7.4	6	2.5	22-05-7025	5268-02A	2
C	B	A	EDP NO.	ENG.NO.	CKT.

(NON-ACCUMULATIVE)

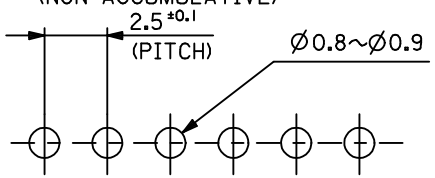

RECOMMENDED P.C. BOARD HOLE DIM.(t=1.6)

REVISED
EC NO: J2018-0076 2017/08/29
DRWN:KUSATO 2017/08/29
CH'KD:AIDA 2017/08/30
APPR:TKANEKO

DESCRIPTION

REV

GENERAL TOLERANCES (UNLESS SPECIFIED)

0.25	UNDER			±
0.25	OVER	0.5	UNDER	±
0.5	OVER	1.0	UNDER	±
0	OVER	10	UNDER	±0.2
10	OVER	30	UNDER	±0.25
30	OVER			±0.3
ANGULAR		±3	°	

DRAFT WHERE APPLICABLE MUST REMAIN WITHIN DIMENSIONS

DIMENSION STYLE: MM ONLY
SCALE: 5:1
DESIGN UNITS: METRIC
THIRD ANGLE PROJECTION

DRAWN BY: K.TOJO DATE: 1991/11/05
CHECKED BY: H.HIRAMOTO DATE: 1992/08/31
APPROVED BY: M.ENAMOTO DATE: 1992/08/31

TITLE: 2.5 LOW PROFILE WAFER ASSY 90□□ BEND

molex

MATERIAL NO.: SEE CHART
DOCUMENT NO.: SD-5268-NA
SHEET NO.: 1 OF 1
SIZE: A3

THIS DRAWING CONTAINS INFORMATION THAT IS PROPRIETARY TO MOLEX ELECTRONIC TECHNOLOGIES, LLC AND SHOULD NOT BE USED WITHOUT WRITTEN PERMISSION