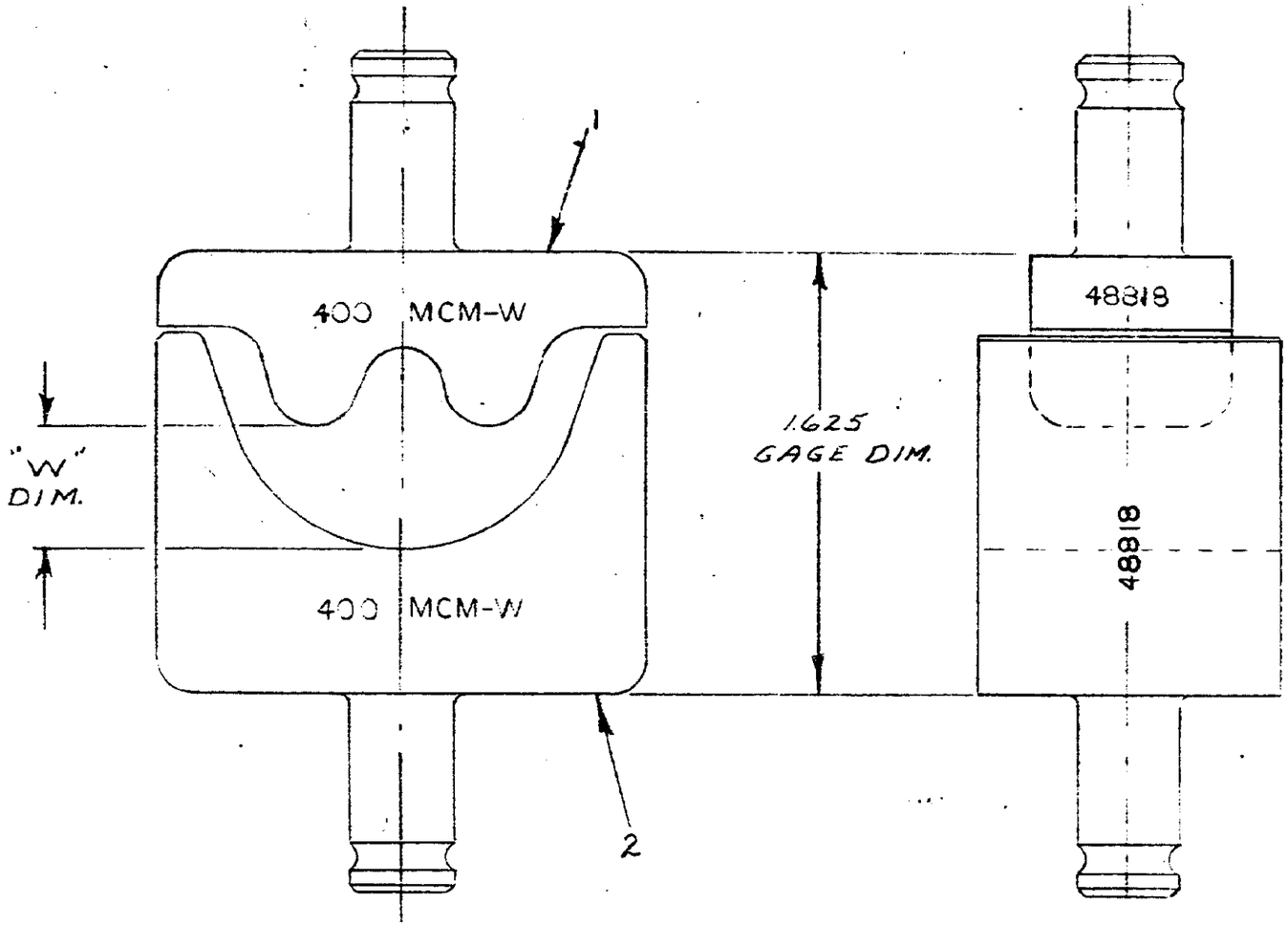

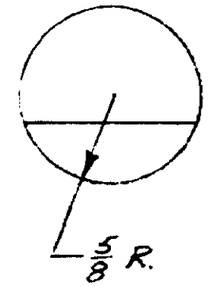

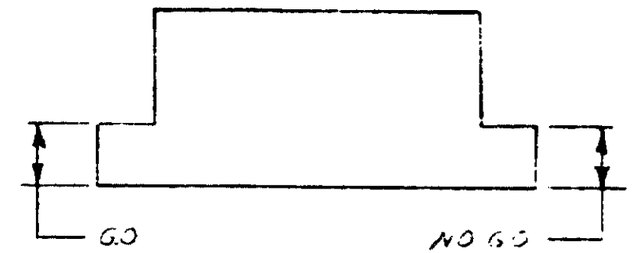

SUGGESTED PLUG GAGE DESIGN

"W" DIM.	
GO	NO GO
.451	.457

1		48746	NEST	2
1		48742	INDENTER	1
DWG SIZE		NUMBER	NAME	REMARKS	ITEM NO

LTR	REVISION RECORD	DR	CHK	DATE
E	REVISED	BS		6-15-71
D	REVISED	AF		9-26-68
C	REDRAWN	CM		4-9-64

NUMBER 48818

REQUIRED PER ASSEMBLY

DESCRIPTION

©1953 BY AMP INCORPORATED. ALL RIGHTS RESERVED.
AMP PRODUCTS COVERED BY PATENTS AND/OR PATENTS PENDING.

CUSTOMER COPY
REFERENCE ONLY

DR C. Moyer 4-8-64
CHK 4-13-64
DE
APP 4-13-64

MATERIAL AND FINISH —
WIRE — RANGE — INSULATION 400 MCM —
TOLERANCE EXCEPT AS NOTED ± .015 = 1° 0'
SCALE 2~1

AMP INCORPORATED HARRISBURG, PENNA

CLASS —
TYPE "W"
LOC M B NO 48818 REV E

NAME INSERT ASS'Y

DIMENSIONS IN INCHES DO NOT SCALE PRINT

E 3

REV 7/68 8 7 6 5 4 3 2 1