MICRO SWITCH
a Honeywell Division
FED. MFG. CODE 91929

SWITCH - ENCLOSED

CATALOG LISTING
LSQ310-20

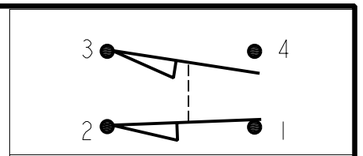

CIRCUIT DIAGRAM

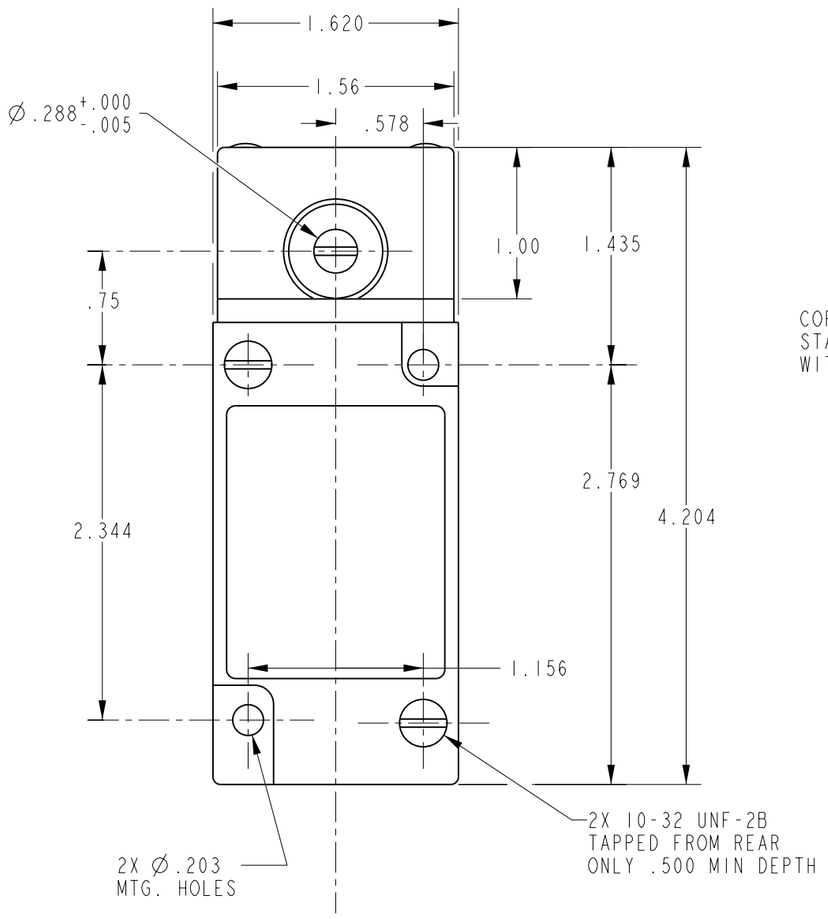

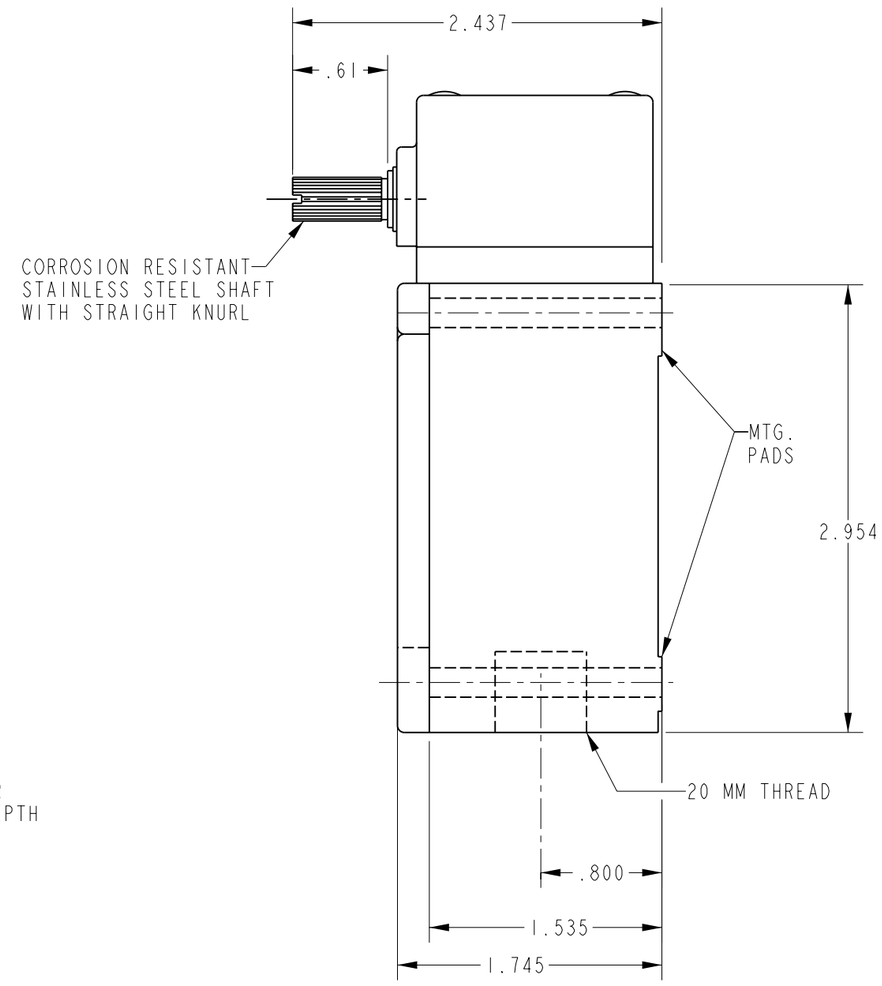

NOTES

1 - SWITCH USES FLUOROSILICONE SEALS IN OPERATING HEADS ONLY

THIS DRAWING COVERS A PROPRIETARY ITEM AND IS THE PROPERTY OF MICRO SWITCH. A DIVISION OF HONEYWELL. THIS DRAWING IS NOT TO BE COPIED OR USED WITHOUT THE APPROVAL OF MICRO SWITCH

THIRD ANGLE PROJECTION

SCALE FULL

DO NOT SCALE PRINT

CHARACTERISTICS	
OPERATING TORQUE	4 IN LBS MAX
PRETRAVEL	55°
CONTACT TRANSFER	60°
SEGMENT POSITION	90°
TOTAL SHAFT ROTATION	360° CW OR CCW

ELECTRICAL DATA

CONTACT ARRANGEMENT
SPDT

UNLESS OTHERWISE SPECIFIED TOLERANCES ARE

ONE PLACE	(.0)	±.030
TWO PLACE	(.00)	±.015
THREE PLACE	(.000)	±.005
ANGLES		±

WEIGHT

ANSI Y14.5M-1982 APPLIES

LSQ310-20
CATALOG LISTING
PAGE 1 OF 1
RELEASE NO. PR-22895
REPLACES
ISSUE 1
CHECK
REVISIONS
CHECK
CHECK
CHECK
DRAWN GLH 11 SEP 97
PTC/CAD

Mouser Electronics

Authorized Distributor

Click to View Pricing, Inventory, Delivery & Lifecycle Information:

Honeywell:
LSQ310-20