LTR	EN	DESCRIPTION	APPR	BY	DATE
A	–	INITIAL RELEASE	MT	DC	12–27–07

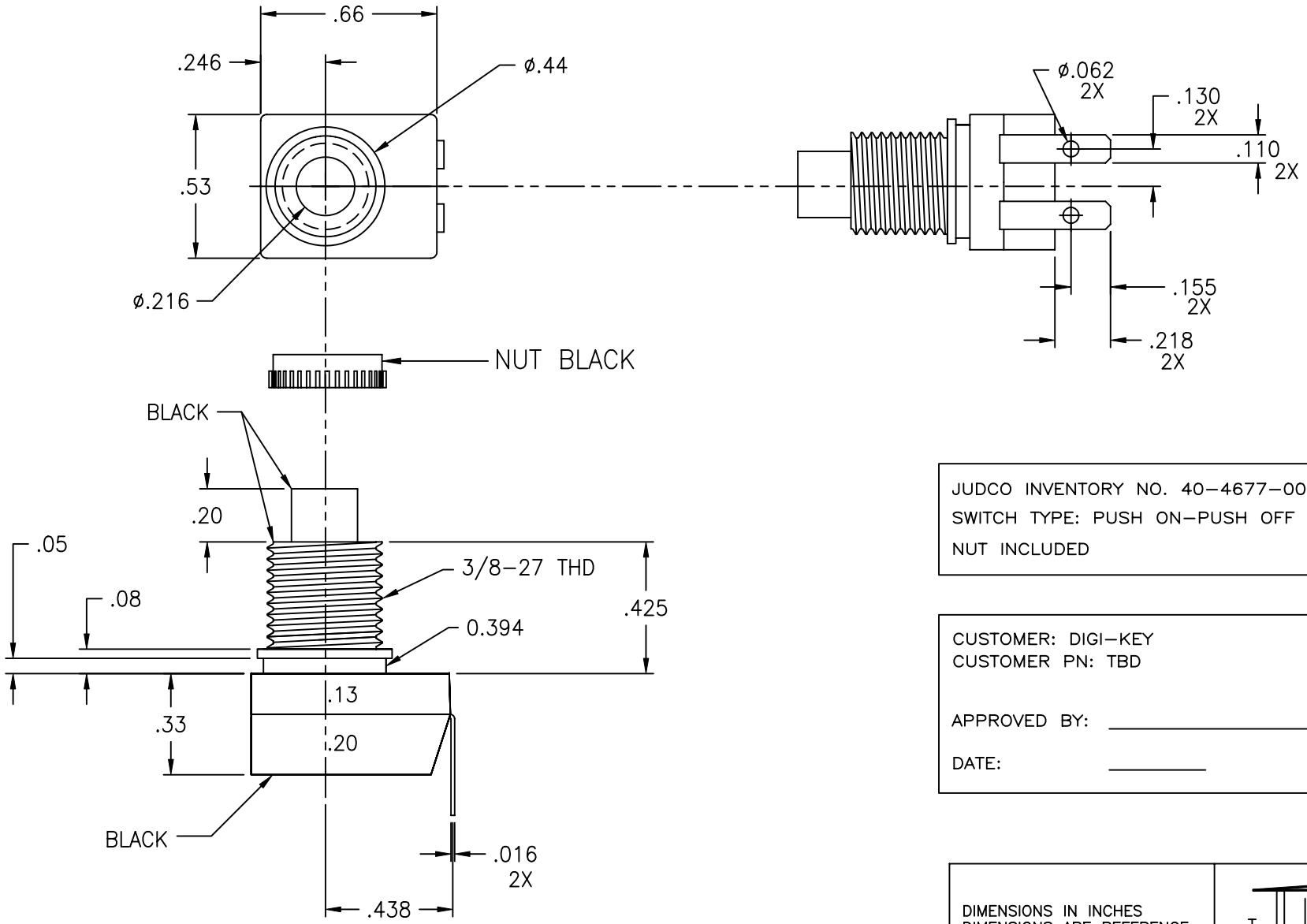

JUDCO INVENTORY NO. 40–4677–00
SWITCH TYPE: PUSH ON–PUSH OFF
NUT INCLUDED

CUSTOMER: DIGI–KEY
CUSTOMER PN: TBD

APPROVED BY: _____

DATE: _____

DIMENSIONS IN INCHES
DIMENSIONS ARE REFERENCE

DRAWN:	DC	12–27–07
APPR:	KJ	12–27–07
ENG'G:	IS	12–27–07

1415U1273A.DWG

JUDCO ®
HARBOR CITY CALIFORNIA

TITLE OUTLINE
J–188A–1 NON UL W/BENT TRMS

DWG. NO. 1415–1273

SHEET 1 OF 1

This document embodies a product, component, and/or design proprietary to JUDCO MANUFACTURING INC., and which is protected either as a trade secret, by U.S. Patent, or by copyright. It may not be used in any way without written express consent of JUDCO MANUFACTURING INC.