| PRODUCT NUMBER (SEE NOTE 2) | CONTACT PLATING | | ROHS COMPATIBILITY |
|---|---|---|---|
| | G SEPARABLE INTERFACE | PRESS-FIT TAIL | |
| 10028918-001 | 0.76um MIN GXT OVER NICKEL | 0.5um MIN TIN-LEAD OVER NICKEL | N/A |
| 10028918-001LF | | 0.5um MIN MATTE TIN OVER NICKEL | SEE NOTE 8 |

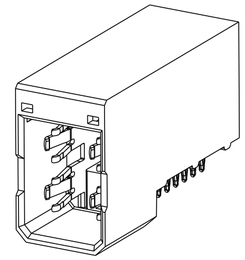

SCALE 2:1

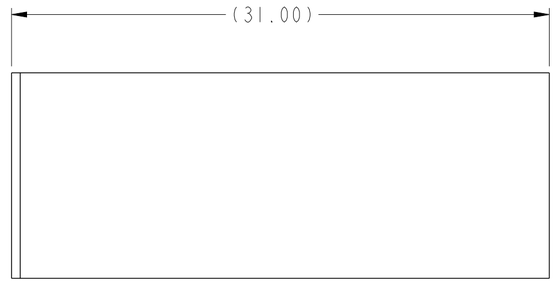


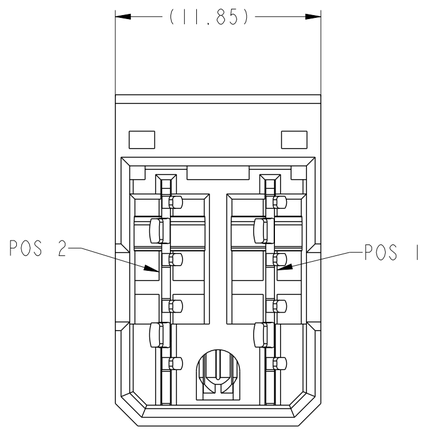


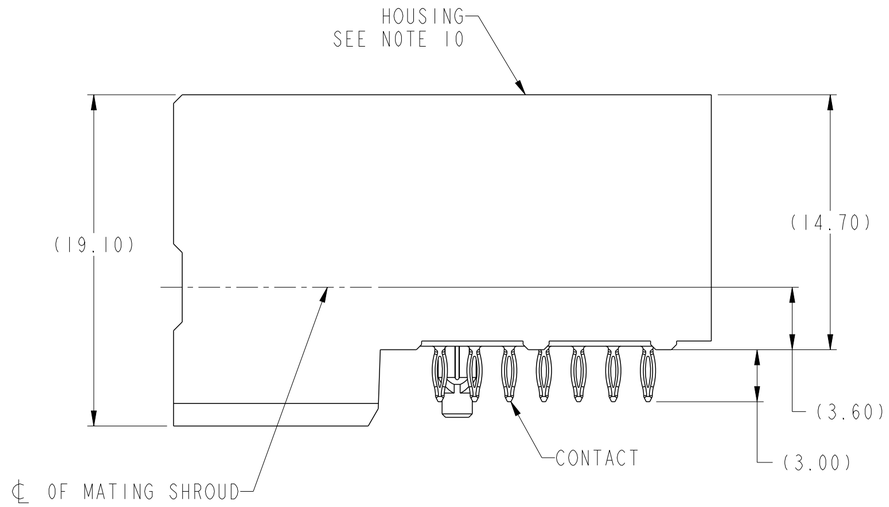


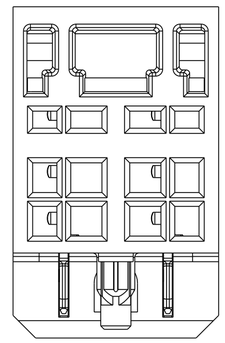

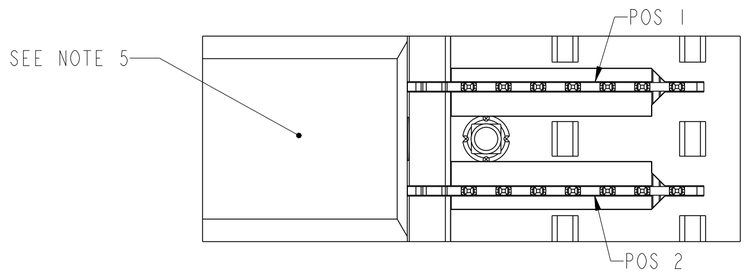


| | | | | | | | |
|---|---|---|---|---|---|---|---|
| spec ref | GS-12-220 | dr | Chen-Hong Tan | 2005/08/03 | projection | MM | size A2 / scale 4:1 |
| tolerance std ASME Y14.5 - | TOLERANCES UNLESS OTHERWISE SPECIFIED | eng | Suzie Nah | 2014/03/21 | | | ecn no ELX-S-17215-1 |
| | | chr | - | - | | | |
| | | appr | Chen-Hong Tan | 2014/03/24 | product family | 2mm High Power | rel level Released |
| surface ✓ | linear 0.X ±.3 / 0.XX ±.10 / 0.XXX ±.050 | FCI | title | R/A HEADER ASSY 1X2 AIRMAX POWER | dwg no | 10028918 | rev G |
| ASME Y14.5 | angular 0° ±2° | www.fci.com | cat. no. | - | Product - Customer Drw | | sheet 1 of 2 |

Copyright FCI.

| TOP LAYER DESCRIPTION | TABLE I PLATED THROUGH-HOLE REQUIREMENTS | | | | | | | |
|---|---|---|---|---|---|---|---|---|
| | DRILLED HOLE DIAMETER | COPPER THICKNESS | TIN-LEAD THICKNESS | NICKEL THICKNESS | GOLD THICKNESS | TIN THICKNESS | SILVER THICKNESS | FINISHED HOLE DIAMETER (DIM"A") |
| TIN-LEAD | 0.81-0.86 (0.85 DRILL) | 0.025 - 0.050 | 0.005 - 0.015 | -- | -- | -- | -- | 0.65 - 0.80 |
| IMMERSION TIN | 0.81-0.86 (0.85 DRILL) | 0.025 - 0.050 | -- | -- | -- | 0.9 - 1.5um | -- | 0.70 - 0.80 |
| IMMERSION SILVER | 0.81-0.86 (0.85 DRILL) | 0.025 - 0.050 | -- | -- | -- | -- | 0.15 - 0.65um | 0.70 - 0.80 |
| COPPER (SEE NOTE 11) | 0.81-0.86 (0.85 DRILL) | 0.025 - 0.050 | -- | -- | -- | -- | -- | 0.70 - 0.80 |
| GOLD | 0.81-0.86 (0.85 DRILL) | 0.025 - 0.050 | -- | 0.003 - 0.007 | FLASH UP TO 0.0002 | -- | -- | 0.69 - 0.80 |

NOTES:

1. CONNECTOR MATERIALS:
   HOUSING: HIGH TEMPERATURE THERMOPLASTIC, BLACK
   UL 94V-0 COMPLIANT
   CONTACT: HIGH PERFORMANCE COPPER ALLOY
2. "LF" SUFFIX DENOTES "LEAD-FREE"
3. PRODUCT SPECIFICATION: GS-12-220
4. APPLICATION SPECIFICATION: GS-20-023
5. PRODUCT MARKING (PRODUCT NUMBER & LOT CODE) ON HOUSING.
6. MINIMUM NOMINAL PCB THICKNESS: 1.6mm
7. REFER TO CUSTOMER DRAWING SK100359II FOR INFORMATION REGARDING PCB LAYOUT OF POWER AND GUIDE MODULES RELATIVE TO SIGNAL MODULES.
8. PRODUCT MEETS EUROPEAN UNION DIRECTIVES AND OTHER COUNTRY REGULATIONS AS DESCRIBED IN FCI SPECIFICATION GS-22-008.
9. PACKAGING MEETS FCI SPECIFICATION GS-14-920.
10. HOUSING COMPONENT WILL WITHSTAND EXPOSURE TO 260°C PEAK TEMPERATURE FOR 60 SECONDS IN A CONVECTION, INFRA-RED, OR VAPOR PHASE REFLOW OVEN.
11. COPPER PLATING THICKNESS IN CENTER OF VIA HOLE CAN BE NO MORE THAN 0.003 LESS THAN OTHER AREAS.
12. A △ SYMBOL WILL BE NEXT TO ANY DIMENSION, VIEW, OR NOTE WHICH HAS BEEN MODIFIED WITH THE CURRENT DRAWING REVISION

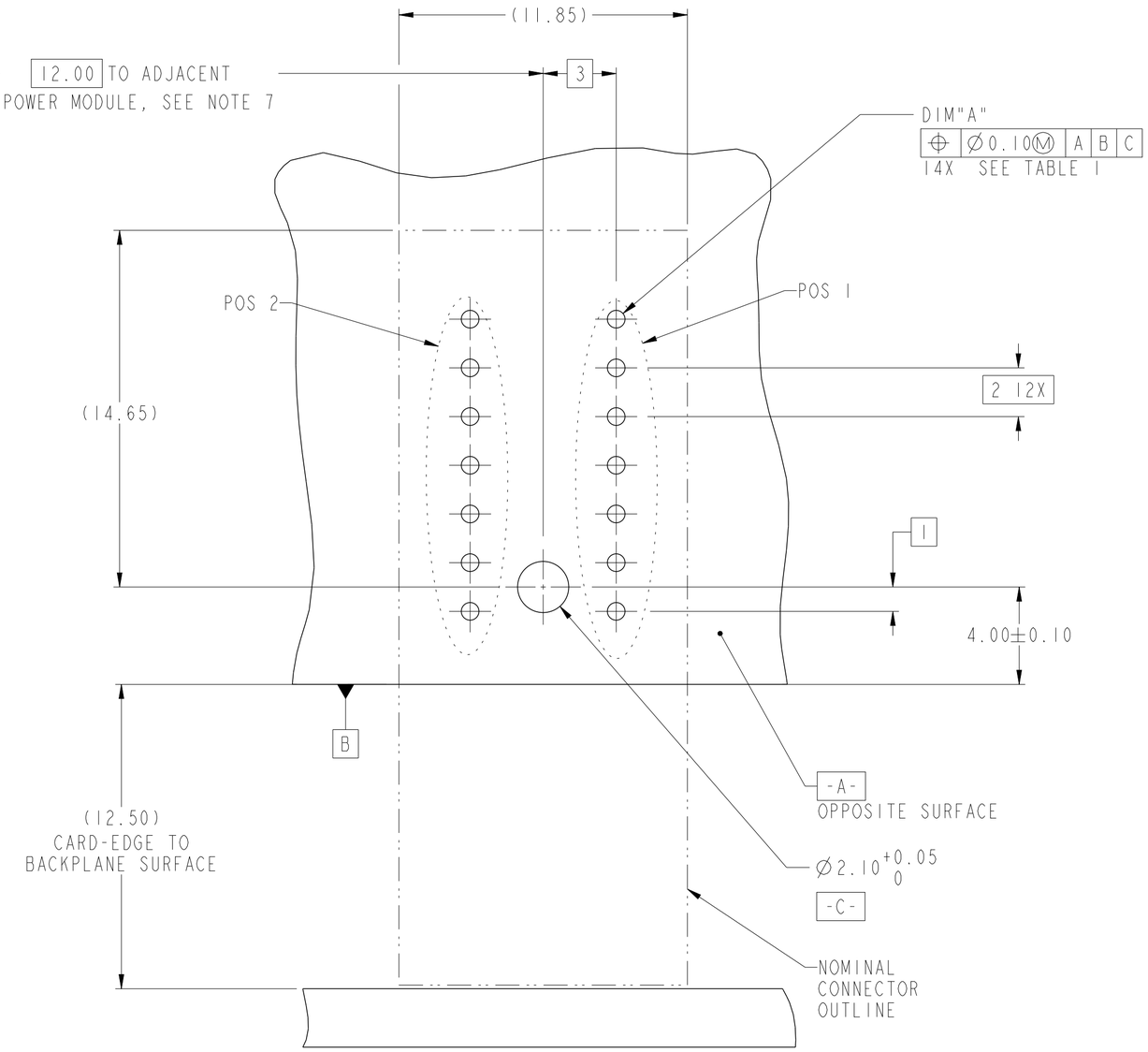


RECOMMENDED PCB LAYOUT,
COMPONENT SIDE
SEE NOTE 6
SCALE 6:1

| | | | | | | | | |
|---|---|---|---|---|---|---|---|---|
| spec ref | GS-12-220 | | dr | Chen-Hong Tan | 2005/08/03 | projection | MM | size A2 / scale 1:1 |
| tolerance std ASME Y14.5 - | TOLERANCES UNLESS OTHERWISE SPECIFIED | | eng | Suzie Nah | 2014/03/21 | | | ecn no ELX-S-17215-1 |
| | | | chr | - | - | | | |
| | | | appr | Chen-Hong Tan | 2014/03/24 | product family - | | rel level Released |
| surface - | linear | 0.X ±.3 | FCI | title | R/A HEADER ASSY 1X2 | dwg no 10028918 | | rev G |
| | | 0.XX ±.10 | | | AIRMAX POWER | | | |
| | | 0.XXX ±.050 | | | | | | |
| ASME Y14.5 | angular | 0° ±2° | www.fci.com | cat. no. - | Product - Customer Drw | | | sheet 2 of 2 |

Copyright FCI.